CABLE ASSEMBLIES
“BUILDING A PRODUCT”

The next section of your *3M Telecom Price Notebook* contains a number of aids to facilitate ordering our custom Fiber Optic Cable Assembly product line. Use the charts to arrive at the product number and/or price of the configuration you wish to purchase. If further assistance is needed, feel free to contact your 3M Telecom Division Customer Service Representative or your 3M Sales Representative.

NOTE: ST is a registered trademark of AT&T.

Building the Product Number:

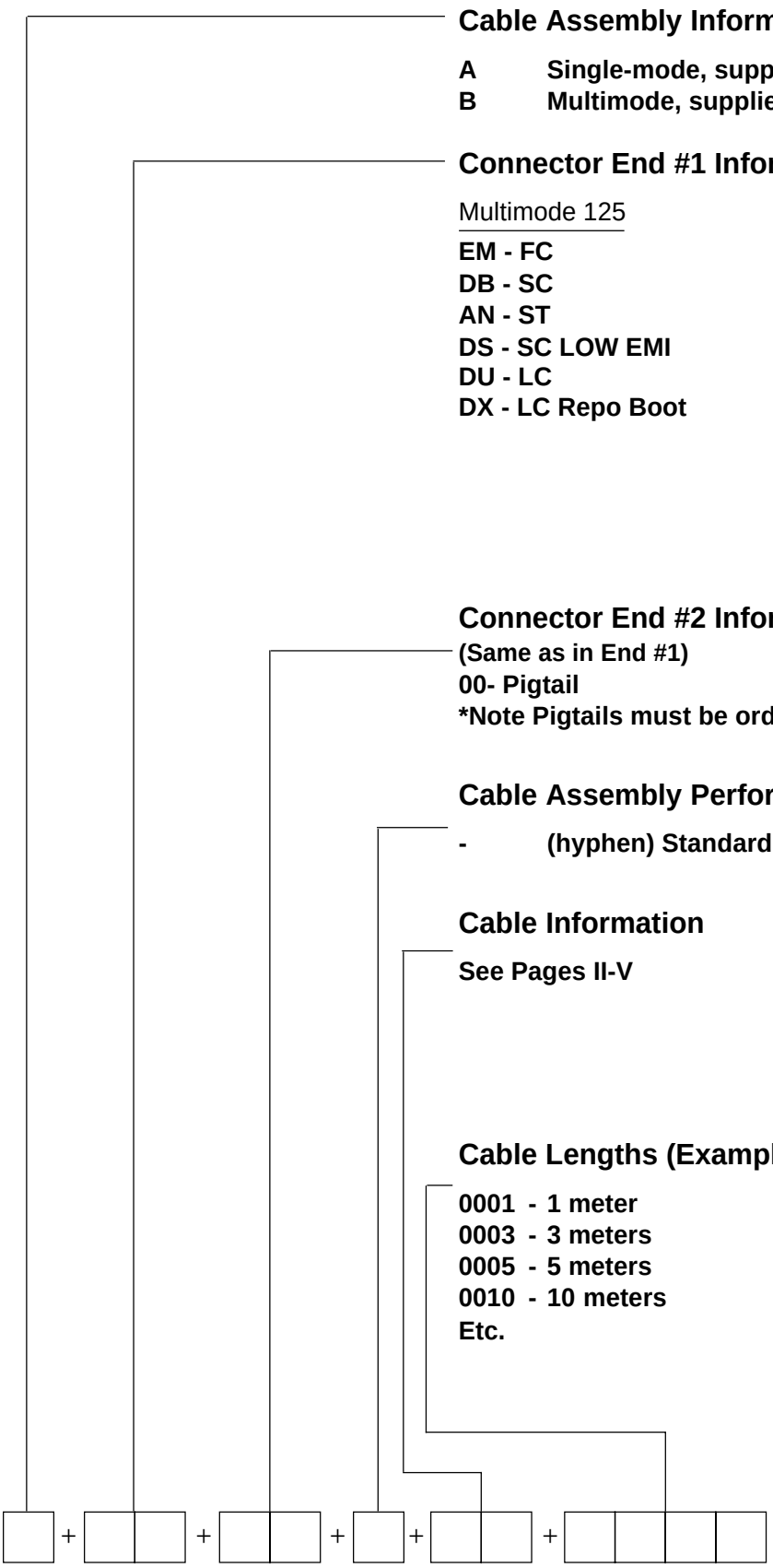

Contact Customer Service for specifications on standard cable. Non-standard cables and lengths are also available.

A: CUSTOM LENGTH SINGLE-MODE PIGTAILS & JUMPERS

STEP 1:
BUILDING THE PRODUCT NUMBER:

A				-					+	A				–					=	A				–				
CONNECTOR CODES															**CABLE CODE**	**LENGTH**					**PRODUCT NUMBER**							

STEP 2:
BUILDING THE PRICE:

$ ___.__ + ($ ___.__ x ____ METERS) = $ ___.__

CONNECTOR PRICE | **CABLE PRICE** | **LENGTH** | **PRICE**

CONNECTOR CODE & PRICE

CONNECTOR	CODE	SUGG. LIST.	DIST.
FC	EN	10.45	7.30
SC	DA	10.45	7.30
SC/APC	EP	14.30	10.00
ST	AM	10.35	7.25
FC/APC KEY 2.0	EX	14.30	10.00
SC LOW EMI	DT	17.15	12.00
LC	DV	14.30	10.00
LC/APC	DW	15.70	11.00
LC REPO BOOT	DY	17.15	12.00
LC/APC REPO BOOT	DZ	18.60	13.00
NO CONNECTOR (PIGTAIL)*	OO		

***NOTE:**

PIGTAILS = PRICE OF ONE CONNECTOR MUST BE ORDERED IN MULTIPLES OF TWO

DUPLEX = 4 TIMES PRICE OF ONE CONNECTOR

JUMPER = 2 TIMES PRICE OF ONE CONNECTOR

DUPLEX PIGTAIL = 2 TIMES PRICE OF ONE CONNECTOR

HYBRID JUMPERS = 1 TIMES PRICE OF EACH CONNECTOR

DUPLEX HYBRID = 2 TIMES PRICE OF EACH CONNECTOR

CABLE CODE & PRICE

CABLE	CODE	PRICE PER METER
**JACKETED (3.0 mm)	AT	0.40
UNJACKETED (900 µm)	AU	0.40
**JACKETED DUPLEX (3.0 mm)	BW	1.00
**JACKETED (2.0 mm)	CU	0.40
**JACKETED DUPLEX (2.0 mm)	CV	0.95

****RISER RATED CABLE**

†*LENGTH*

0001 - 1 METER
0003 - 3 METERS
0005 - 5 METERS
0010 - 10 METERS
0015 - 15 METERS
0020 - 20 METERS

Note: Length Tolerance
-0 /+.15 meters (6 inches)
† Any length my be ordered.

Example: *(Single-mode)*
ST TO ST, STANDARD, JACKETED CABLE, 10 METERS, DISTRIBUTOR

A	A	M	A	M	–	A	T	0	0	1	0

(AAMAM-AT0010)
14.50 + (10 x 0.40) = $18.50

B: CUSTOM LENGTH MULTIMODE PIGTAILS & JUMPERS

STEP 1:
BUILDING THE PRODUCT NUMBER:

B				-					+	B				–					=	B				–				
CONNECTOR CODES														**CABLE CODE**	**LENGTH**										**PRODUCT NUMBER**			

STEP 2:
BUILDING THE PRICE:

$ ☐☐☐.☐☐ + ($ ☐.☐☐ x ☐☐☐☐ METERS) = $ ☐☐☐.☐☐

CONNECTOR PRICE | **CABLE PRICE** | **LENGTH** | **PRICE**

CONNECTOR CODE & PRICE

MULTI MODE 125	SUGG. LIST	DIST.
EM - FC	14.30	10.00
DB - SC	8.90	6.25
AN - ST	8.60	6.00
DS - SC LOW EMI	15.70	11.00
DU - LC	10.70	7.50
DX - LC REPO BOOT	13.60	9.50
OO - NO CONNECTOR (PIGTAIL)*		

***NOTE:**

PIGTAILS = PRICE OF ONE CONNECTOR MUST BE ORDERED IN MULTIPLES OF TWO.

DUPLEX = 4 TIMES PRICE OF ONE CONNECTOR

DUPLEX PIGTAIL = 2 TIMES PRICE OF ONE CONNECTOR

JUMPER = 2 TIMES PRICE OF ONE CONNECTOR

HYBRID JUMPERS = 1 TIMES PRICE OF EACH CONNECTOR

DUPLEX HYBRID = 2 TIMES PRICE OF EACH CONNECTOR

CABLE CODE & PRICE

	CODE	PRICE PER METER
50/125 JACKETED (3.0 mm)	ZJ	0.62
50/125 JACKETED (2.0 mm)	CQ	0.55
50/125 DUPLEX JACKETED (3.0 mm)	AX	1.25
50/125 DUPLEX JACKETED (2.0 mm)	CR	1.00
50/125 GGP DUPLEX JACKETED	CC	1.70
62.5/125 JACKETED (3.0 mm)	AF	0.62
62.5/125 JACKETED (2.0 mm)	CS	0.55
62.5/125 DUPLEX JACKETED (3.0 mm)	AQ	1.25
62.5/125 DUPLEX JACKETED (2.0 mm)	CT	1.00
62.5/125 GGP DUPLEX JACKETED	CA	1.70

RISER RATED CABLE

†*LENGTH*

0001 - 1 METER
0003 - 3 METERS
0005 - 5 METERS
0010 - 10 METERS
0015 - 15 METERS
0020 - 20 METERS

Note: Length Tolerance -0/+.15 meters (6 inches)
†Any length may be ordered.

***Example**: (Multimode)*

ST TO ST, STANDARD, 62.5/125 JACKETED CABLE, 10 METERS, DISTRIBUTOR

B	A	N	A	N	–	A	F	0	0	1	0

(BANAN-AF0010)
(6.00 x 2) + (10 x 0.62) = $18.20

PRE-CONNECTORIZED MULTI-FIBER CABLE

STEP 1:
BUILDING THE PART NUMBER:

☐	☐☐	☐☐	–	☐☐	☐☐☐☐
A=SINGLE-MODE B=MULTIMODE	CONNECTOR CODES			CABLE CODE	CABLE LENGTH

STEP 2:
BUILDING THE PRICE:

($ ☐☐.☐☐ x NUMBER OF TERMINATIONS) + ($ ☐☐.☐☐ x ☐☐☐☐ METERS) + BREAK OUT CHARGE = ☐☐☐.☐☐

CONNECTOR PRICE — CABLE PRICE — LENGTH — PRICE

CONNECTOR CODE & PRICE
(One Connector Termination)

SINGLE-MODE	CODE	SUGG. LIST	DIST.
FC	EN	17.15	12.00
SC	DA	17.15	12.00
ST	AM	15.70	11.00
SC/APC	EP	18.60	13.00
FC/APC KEY 2.0	EX	18.60	13.00
LC	DV	18.60	13.00
NO CONNECTOR (PIGTAIL)	*OO		

***NOTE:** PIGTAIL = PRICE OF ONE CONNECTOR TIMES THE NO. OF FIBERS
JUMPER = 2 TIMES THE PRICE OF ONE CONNECTOR TIME THE NO. OF FIBERS
PRE-CONNECTORIZED MULTI-FIBER PIGTAIL ASSEMBLIES MUST BE ORDERED IN MULTIPLES OF TWO FOR THE SAME CABLE CODE.

BREAK OUT CHARGE

4-12	FIBER	$100.00
24	FIBER	$200.00
36	FIBER	$300.00
48	FIBER	$400.00
72	FIBER	$500.00
96	FIBER	$600.00

CABLE CODE & PRICE

SINGLE-MODE	CODE	PRICE PER METER
900 μm subunits		
4 FIBER	EA	1.40
6 FIBER	EB	1.85
12 FIBER	GY	4.45
24 FIBER	EC	9.00
36 FIBER	ED	15.00
48 FIBER	EQ	20.00
72 FIBER	EE	29.00
96 FIBER	EJ	40.00

OTHER CABLE TYPES ARE AVAILABLE AS A SPECIAL ORDER

NOTE: ALL CABLES LISTED ARE FOR RISER RATED. FOR PLENUM CABLE, PLEASE CALL YOUR LOCAL 3M SALES REPRESENTATIVE.

**LENGTH

0010 = 10 METERS
0025 = 25 METERS
0100 = 100 METERS
**Any length may be ordered.

***Example:** (Single-mode)*
SC JUMPER, 24 FIBER CABLE, 20 METERS, DISTRIBUTOR

A	DA	DA	-	EC	0020	+	BREAK OUT CHARGE	=	Total
(2 x 12.00 x 24) +				(20 x 9.00)		+	$200.00	=	$956.00