# PC/104 selection guide

## CoreModule®

The CoreModule® family excels in Extreme Rugged™ applications and is frequently used in compact stacks where all the functions of the application are contained within the PC/104-ISM footprint. Stacks consist of a CoreModule® CPU and one or more off-the-shelf PC/104 (or SUMIT-ISM) I/O expansion modules. The stack requires a small footprint and can be mounted directly inside the system enclosure for a durable, dependable PC-compatible assembly.



| | PCI/104-Express | PC/104-*Plus* | | PC/104 |
|---|---|---|---|---|
| |  |  |  |  |
| | CoreModule® 920 | CoreModule® 745 | CoreModule® 720 | CoreModule® 435 |
| CPU | Intel® Core™ i7-3517UE 1.7GHz<br>Intel® Celeron® 807UE 1.0GHz | Intel® Atom™ N455 (single core) 1.66GHz<br>Intel® Atom™ D525 (dual core) 1.8GHz | Intel® Atom™ E680T 1.6 GHz<br>Intel® Atom™ E660T 1.3 GHz<br>Intel® Atom™ E620T 0.6 GHz | Vortex86DX 800MHz<br>Vortex86SX 300MHz |
| Cache | 4MB/1MB Level 3 | 512KB / 1MB | 512KB Level 2 | 16kB I-cache<br>16kB D-cache |
| DRAM | Up to 4GB soldered ECC DDR3 | Up to 2GB DDR3 | Up to 2GB soldered DDR2 | 256MB soldered DDR2 |
| Bus Interface | PCI/104 Express | PC/104-*Plus* | PC/104-*Plus* | PC/104 |
| PATA/ SATA | 2x SATA 6 Gb/s | 2x SATA | 1x SATA | EIDE |
| Solid State Disk | 8GB Onboard | 4GB Onboard | 8GB Onboard | CompactFlash |
| Serial Port | 2x RS-232 | 2x RS-232<br>1x RS-232/422/485 | 1x RS-232<br>3x RS-232 (Tx and Rx only) | 2x RS-232<br>2x RS-232/422/485 |
| Parallel Port | No | No | No | No |
| Floppy | No | No | No | No |
| USB | 4x USB 2.0 | 4x USB 2.0 | 6x USB 2.0 | 2x USB 2.0 |
| Keyboard / Mouse | No | PS/2 | No | PS/2 |
| GPIO | No | 8 | 8 | 8 |
| Audio | available on HDMI port | No | No | No |
| Network | 1x GbE | Gigabit Ethernet | Gigabit Ethernet | 1x 10/100<br>1 Gigabit Ethernet |
| Video | Intel® HD Graphics 4000, VGA, DVI | Intel® GMA 3150, VGA | Optional VGA (via the SDVO-VGA adapter board) | VGA |
| Flat Panel | Dual channel 18/24-bit LVDS | Single channel 18-bit LVDS | Single channel 24-bit LVDS | TTL/TFT |
| SEMA Support | - | - | - | - |
| Standard Operating Temperature | -20°C to +70°C | -20°C to +70°C | -20°C to +70°C | -20°C to +70°C |
| Optional Extended Temperature | -40°C to +85°C | -40°C to +85°C | -40°C to +85°C | -40°C to +85°C |
| Page Number | 19 | 20 | 21 | 22 |

| | PC/104 | PC/104-*Plus* |
|---|---|---|
| |  |  |
| | CoreModule® 86DX2 | Cool FrontRunner-AF |
| CPU | Vortex86DX2 | AMD® T40R (1.0GHz)<br>AMD® T56N (1.65GHz) |
| Cache | 16kB L1 I-cache<br>16kB L1 D-cache<br>256kB L2 cache | 64kB L1 cache<br>2x 512kB L2 cache |
| DRAM | 1GB soldered DDR2 | Up to 4GB DDR3 |
| PATA/SATA | 1x SATA 1.5 Gb/s | 1x SATA 6 Gb/s |
| Solid State Disk | N/A | N/A |
| PCI Express | PC/104 | PC/104-*Plus* |
| USB | 3x USB 2.0 | 6x USB 2.0 |
| GPIO | 8 | 8 |
| Flat Panel | Single channel 18/24-bit LVDS | Dual channel 18/24-bit LVDS |
| Graphics | VGA | VGA |
| Audio | High Definition Audio | High Definition Audio |
| Network | 1x GbE | 1x GbE |
| Serial Port | 4x RS-232/485 | 2x RS-232/422/485 |
| Parallel Port | Yes | N/A |
| Floppy | N/A | N/A |
| Keyboard / Mouse | PS/2 | PS/2 |
| SEMA Support | Yes | Yes |
| Standard Operating Temperature | 0°C to +60°C | 0°C to +60°C |
| Optional Extended Temperature | -20°C to +70°C<br>-40°C to +85°C | -20°C to +70°C<br>-40°C to +85°C |
| Page Number | 23 | 25 |

# CoreModule® 920

## Extreme Rugged™ PCI/104-Express 3rd Generation Intel® Core™ Processor Single Board Computer



## Features

- Dual-core 3rd Generation Intel® Core™ Processor
- Up to 4GB industrial grade soldered-down ECC 1600MHz DDR3 memory
- One HDMI, one VGA, and one 18/24-bit LVDS display interfaces
- 8GB industrial grade solid state drive (SSD)
- one PCIe x16 (Gen 3) and 1 x4 or 4 x1 (Gen 2)
- Two SATA 6 Gb/s ports, two Gigabit Ethernet, four USB 2.0 interfaces, and two serial ports
- PCI/104-Express Type 1 and PCI/104 expansion interfaces
- Extended Temperature: -40°C to +85°C
- 50% thicker PCB for high vibration environments

## Specifications

### Core System

| | |
|---|---|
| CPU | Intel® Core™ i7-3517UE 1.7GHz (up to 2.8GHz Turbo), 4MB L3 cache, 17W, dual core |
| | Intel® Celeron® 807UE 1.0GHz, 1MB L3 cache, 10W, single core |
| Chipset | Mobile Intel® QM67 Express Chipset (PCH) |
| Memory | 2 or 4GB single channel industrial grade solder down ECC 1600 MHz DDR3 memory |
| BIOS | AMI EFI with CMOS backup in 16 Mb SPI flash |
| Hardware Monitor | Supply voltages and CPU temperature |
| Watchdog Timer | Programmable timer range to generate RESET |
| Technologies | PAVP 3.0, Intel® AMT 8.0, Intel® VT, Intel® AES-NI, Intel® HT, Intel® HD Graphics with Dynamic Frequency, Intel® Turbo Boost , Dynamic Turbo, Intel® AVX 1.0, Intel® Quick Sync Video |

### Bus Interfaces

| | |
|---|---|
| Expansion Busses | PCI/104 (32-bit 33/66MHz) |
| | PCI/104-Express Type 1 with PCI Express x16 (Gen3) bus |
| | LPC bus, SMBus (system), I²C (user) |

### Video

| | |
|---|---|
| Integrated in Processor | HD Graphics 4000 at 350-1000 MHz |
| Integrated Video | DirectX 11.0, OpenGL 3.1, and OCL 1.1 |
| Media Processing | Decode (HW JPEG & MJPEG decode), encode (full HW MPEG2 encode), transcode |
| | Intel® Clear Video HD Technology + enhanced media processing |
| VGA Interface | Analog VGA support with 300 MHz DAC |
| | Analog monitor support up to QXGA (2048 x 1536) and VGA hot plug |
| LVDS Interface | Dual-channel 18/24-bit LVDS |
| Digital Display Interface | One DVI |

### Audio

| | |
|---|---|
| Chipset | Integrated on mobile Intel® QM67 Express Chipset, available on HDMI port |

### Ethernet

| | |
|---|---|
| 10/100/1000Mbps | Two GbE: one from PCH using Intel® 82579 PHY, one from Intel® 82574 MAC/PHY |

### Multi I/O and Storage

| | |
|---|---|
| Chipset | Integrated on Mobile Intel® QM67 Express Chipset |
| USB | Four USB 2.0 ports (plus two to the PCI/104-Express stack) |
| SATA | Two SATA 6 Gb/s (plus two SATA 3 Gb/s to the PCI/104-Express stack) with support for RAID 0,1,5,10 |
| Storage | Onboard 8GB industrial grade SS |
| Serial Ports | Two RS-232 Serial ports implemented in LPC based Super I/O |

### Power Specifications

| | |
|---|---|
| Input Power | 5V (3.3V and 12V if required by the PCI/104-Express stack) |
| Power States | Supports S1, S4, S5 |
| Power Consumption | 9W typical |

### Mechanical and Environmental

| | |
|---|---|
| Size | 106 mm x 96 mm, PCI/104-Express form factor compatible |
| Board Thickness | 0.093" (2.36 mm thick) |
| Operating Temperature | Standard: -20°C to +70°C |
| | Extended: -40°C to +85°C (CPU throttling at 800MHz, no throttling to +75°C) |
| Storage Temperature | -55°C to +85°C |
| Humidity | 90% at 60°C non-condensing |
| Shock | 50G peak-to-peak, 11ms duration, MIL-STD-202G Method 213B |
| Vibration | Operating: 11.96 Grms, 50-20,000 Hz, each axis, MIL-STD-202G Method 214A |

### Operating Systems

| | |
|---|---|
| Standard Support | Windows 7, Linux |
| Extended Support (BSP) | WES 7, WES 2009, WEC 7, VxWorks 6.9, QNX 6.5 |

## Ordering Information

### Modules

| Model Number | Description/Configuration |
|---|---|
| **CM-920-R-10** | PCI/104-Express with Intel® Celeron 807UE 1.0GHz, 10W, 2GB solder down DDR3 1066 memory, 8GB SSD, 18/24 bit LVDS, VGA, HDMI, SATA, PCI Express, PCI |
| **CM-920-R-17** | PCI/104-Express with Intel® Core™ i7-3517UE 1.7GHz, 17W, 2GB solder down DDR3 1066 memory, 8GB SSD, 18/24 bit LVDS, VGA, HDMI, SATA, PCI Express, PCI |
| **CM-920-L-10** | CM-920 Quick Start Kit includes CM-920-R-10, cable kit, CM920-TM-CU. USB stick with BSP/drivers and manuals |
| **CM-920-L-17** | CM-920 Quick Start Kit includes CM-920-R-17, cable kit, CM920-TM-CU. USB stick with BSP/drivers and manuals |

### Accessories

| Model Number | Description/Configuration |
|---|---|
| **CM-920-X-01** | CM-920 cable kit (RoHS). Additional cables to be defined as required for extreme rugged pin headers |
| **CM-920-TM-AL** | CM-920 Aluminum Heatspreader |
| **CM-920-TM-CU** | CM-920 Copper Heatsink |
| **CM-920-TM-FAN** | CM-920 Aluminum/Copper Heatsink with Fan |

# CoreModule® 745

## Atom™ PC/104-*Plus* Single Board Computer with ICH8-M Chipset



EXTREME RUGGED

### Features

- Intel® Atom™ Processor N455/D525
- Up to 4GB Single Channel DDR3 SDRAM
- PC/104-*Plus* expansion
- Intel® 82574IT Gigabit Ethernet, 3 COMs, 4 USB, 4GB SSD onboard
- Integrated graphics DirectX 9 controller at 200MHz
- Single Channel 18-bit LVDS and analog VGA

## Specifications

### Core System

CPU – Intel® Atom™ N455, 1.66GHz, 6.5 W (1 core/2 threads)
– Intel® Atom™ D525, 1.8GHz, 13 W (2 cores/4 threads)
Cache – 1MB, 8-way L2 cache for D525 dual-core processor
– 512KB, 8-way L2 cache for N455 single-core processor
Chipset – Intel® ICH8-M I/O Control Hub
Memory – Up to 2GB DDR3-667 (N455) or DDR3-800 (D525) on single SODIMM (Raw Card-A or Raw Card-B format only)
FSB – 1066MHz
BIOS – AMI with CMOS backup in 16Mbit SPI flash with ACPI 2.0
Hardware Monitor – DC voltages, CPU temperature

### Bus Interfaces

PC/104-*Plus* (ISA and PCI), SMBus, LPC

### Multi I/O and Storage

SATA – 2 SATA 3 Gb/s
Storage - Onboard 4GB industrial grade SSD
USB – 4 USB 2.0 ports
Serial – 2 RS-232 & 1 RS-232/422/485
GPIO – 8

### Ethernet

Intel® 82574IT Gigabit Ethernet Controller

### Video

Intel® GMA 3150. DirectX 9 compliant Pixel Shader v2.0
Single Channel 18-bit LVDS
Analog VGA

### Power

Input Power - AT mode (5V DC +/-5%)
Power States - Supports S0

### Mechanical and Environmental

Size – 106 mm x 96 mm, PC/104-*Plus* form factor
Board Thickness – 0.093" (2.36 mm thick)
Operating Temperature
- Standard: -20°C to +70°C
- Extended: -40°C to +85°C

Storage Temperature: - 55°C to +85°C
Humidity – 90% at 60°C
Shock - Non-operating: 50G peak-to-peak, 11ms duration, MIL-STD-202G Method 213B
Vibration – Operating: 11.95 Grms, 50-2000 Hz, each axis, MIL-STD-202G Method 214A

### Operating Systems

Standard Support - Windows 7, Windows XP, Linux
Extended Support (BSP) - WES 2009, WES 7, WEC 7, WinCE 6.0, VxWorks 6.7/6.9, QNX 6.4
*Note: Available upon request or contact us for additional software support

## Ordering Information

### Modules

| Model Number | Description/Configuration |
|---|---|
| **CM-745-R-27** | CoreModule™ 745, Intel® Atom™ SC N455, 1.66GHz, 0MB RAM, 4GB SSD, Video, Gigabit Ethernet, PC/104-*Plus* |
| **CM-745-R-29** | CoreModule™ 745, Intel® Atom™ DC D525, 1.8GHz, 0MB RAM, 4GB SSD, Video, Gigabit Ethernet, PC/104-*Plus* |
| **CM-745-L-27** | 1.66GHz QuickStart Kit (R-27 SBC, 1GB RAM, Cable kit, aluminum heatsink Software) |
| **CM-745-L-29** | 1.8GHz QuickStart Kit (R-29 SBC, 2GB RAM, Cable kit, copper heatsink, Software) |

### Accessories

| Model Number | Description/Configuration |
|---|---|
| **CM-745-X-01** | CM-745 cable kit (RoHS) |
| **CM-745-TM-AL** | CM-745 Aluminum Heatsink |
| **CM-745-TM-CU** | CM-745 Copper Heatsink |
| **CM-745-TM-FAN** | CM-745 Aluminum Heatsink with Fan |
| **DDR3 memory** | Verified industrial grade 1GB, 2GB, 4GB DDR3 SODIMM memory available |

# CoreModule® 720

## PC/104-*Plus* Single Board Computer with Intel® Atom™ Processor E600T Series






## Features

- Intel® Atom™ Processor E600T series from 600 MHz up to 1.6 GHz
- Up to 2 GB soldered industrial grade DDR2 SDRAM at 800 MHz
- 24-bit LVDS
- Intel® Platform Controller Hub EG20T for USB, LAN, SDIO, Serial, CAN bus and SATA
- 8GB industrial grade SSD soldered onboard
- PC/104-*Plus* (ISA and PCI)
- Extended Temperature: -40°C to +85°C
- 50% thicker PCB for high vibration environments

## Specifications

### Core System

CPU – Intel® Core™Atom™ Processor E620T, 0.6GHz, 512KB L2 cache, 3.3W, single core
– Intel® Core™Atom™ Processor E660T, 1.3GHz, 512KB L2 cache, 3.6W, single core
– Intel® Core™Atom™ Processor E680T, 1.6GHz, 512KB L2 cache, 4.5W, single core

DRAM – Up to 2GB industrial grade Single Channel DDR2 800 soldered down

Chipset – Intel® EG20T Platform Controller Hub

BIOS – AMI with ACPI 2.0

### Video

Optional VGA (via SDVO-to-VGA adapter board)

LVDS – 24-bit Single Channel, 1280x768 pixel at 60Hz with backlight

### Bus Interfaces

PC/104-*Plus* (PCI, ISA)

CAN Bus (single channel)

### Multi I/O and Storage

SATA – 1 device

8GB industrial grade SSD (occupies one SATA device)

USB – 6 USB 2.0 ports

Serial – 1 RS-232 (full modem), 3 RS-232 (TX and RX only)

SDIO

Storage - Onboard 8GB industrial grade SSD

### Ethernet

Intel® 82574IT Gigabit Ethernet Controller

### Power

Input Power – AT mode (5V +/- 5%)

Power States – Supports S0

### Mechanical and Environmental

Size – PC/104-*Plus* form factor 106mm x 96mm

Board Thickness – 0.093" (2.3mm thick)

Operating Temperature
- Standard: -20°C to +70°C
- Extended: -40°C to +85°C

Storage Temperature - -55°C to +85C

Humidity – 90% at 60°C

Shock – Non-operation: 50G peak-to-peak, 11ms duration, MIL-STD-202G Method 213B

Vibration – Operation: 11.95 Grms, 50-2000 Hz, each axis, MIL-STD-202G Method 214A

### Operating Systems

Standard Support - Windows 7, Windows XP, Linux

Extended Support (BSP) - WES 2009, Win XPe, WES 7, WEC 7, WinCE 6.0, VxWorks 6.8

*Note: Available upon request. Contact us for more software support.

## Ordering Information

### Modules

| Model Number | Description/Configuration |
|---|---|
| **CM-720-R-06** | PC/104-*Plus* Intel® Atom™ Processor E620T at 0.6 GHz with 2GB RAM and 8 GB SSD |
| **CM-720-R-13** | PC/104-*Plus* Intel® Atom™ Processor E660T at 1.3 GHz with 2GB RAM and 8 GB SSD |
| **CM-720-R-16** | PC/104-*Plus* Intel® Atom™ Processor E680T at 1.6 GHz with 2GB RAM and 8 GB SSD |
| **CM-720-L-06** | 0.6GHz QuickStart Kit (R-06 SBC, 2GB onboard RAM, CM-720-TM-CU copper passive heatsink, SDVO-VGA adapter board, Cable Kit, Software) |
| **CM-720-L-13** | 1.3GHz QuickStart Kit (R-13 SBC, 2GB onboard RAM, CM-720-TM-CU copper passive heatsink, SDVO-VGA adapter board, Cable Kit, Software) |
| **CM-720-L-16** | 1.6GHz QuickStart Kit (R-16 SBC, 2GB onboard RAM, CM-720-TM-CU copper passive heatsink, SDVO-VGA adapter board, Cable Kit, Software) |

### Accessories

| Model Number | Description/Configuration |
|---|---|
| **SDVO-VGA-R-10** | SDVO-to-VGA adapter board, 1x SDVO (input), 1x VGA box header (output) for CoreModule 720 |
| **CM-720-X-01** | CM-720 cable kit (RoHS) |
| **CM-720-TM-AL** | CM-720 Aluminum Heatsink |
| **CM-720-TM-CU** | CM-720 Copper Heatsink |
| **CM-720-TM-FAN** | CM-720 Aluminum Heatsink with Fan |

# CoreModule® 435

## PC/104 Single Board Computer with low power Vortex86SX/86DX System-on-Chip



EXTREME RUGGED

### Features

- -40°C to +85°C operating temperature range
- 10/100 Ethernet, Gigabit Ethernet, 3D Video
- 4x Serial, 2x USB, 8x GPIOs
- PC/104 Expansion
- Ultra Low Power
- 486 migration

## Specifications

### Core System

| | |
|---|---|
| CPU | 300MHz Vortex86SX or 800MHz Vortex86DX |
| Cache | 16kB I-cache, 16kB D-cache |
| Memory | 256MB soldered DDR2 |
| System Controllers | PC-compatible DMA and interrupt controller and timers |
| Real Time Clock | Battery-backed RTC/CMOS |
| Powerfail Reset | Triggers when key voltage drops below predetermined thresholds |
| BIOS | AMI BIOS |

### Bus Interface

| | |
|---|---|
| PC/104 | ISA |

### Multi I/O and Storage

| | |
|---|---|
| PATA | DMA 100 IDE interface supports up to two hard drives |
| Storage | CompactFlash socket |
| Serial | 2x RS-232, 2x RS-232/422/485 |
| USB | 2x USB 2.0 ports |
| KB/MS | PS/2 interface |
| GPIO | Eight general-purpose digital I/O pins |

### Ethernet

| | |
|---|---|
| Ethernet | 1x integrated Vortex86 10/100 port and 1x Intel 82451PI Gigabit Ethernet |

### Video

| | |
|---|---|
| Graphics Engine | Integrated 2D, 64-bit, single-cycle, 100MHz |
| Resolution | 1600x768 |
| Video Memory | 32MB/64MB DDR2 |
| VGA | Yes |
| TTL/TFT | Dual channels 12-bit or Single Channel 18-bit color depths<br>Supports 3.3V, 5V flat panels |

### Power

| | |
|---|---|
| Power Requirement | 1.3A @5V |

### Mechanical and Environmental

| | |
|---|---|
| Form Factor | PC/104 |
| Dimensions | 90x96mm (3.6x3.8") |
| Board Thickness | 0.093" (2.36mm thick) |
| Operating Temperature | (100 LFM system air flow)<br>• Standard: -20°C to +70°C<br>• Extended: -40°C to +85°C |
| Storage Temperature | -55°C to +85°C |

### Operating Systems

Extended Support (BSP) Win XPe, WinCE 5.0/6.0, QNX 6.5

## Ordering Information

### Modules

| Model Number | Description/Configuration |
|---|---|
| **CM-435-R-10** | CoreModule® 435, 300MHz Vortex CPU, 256MB RAM, Video, 10/100 & Gigabit Ethernet |
| **CM-435-R-12** | CoreModule® 435, 800MHz Vortex CPU, 256MB RAM, Video, 10/100 & Gigabit Ethernet |

### Accessories

| Model Number | Description/Configuration |
|---|---|
| **CM-435-L-10** | 300MHz QuickStart Kit (CM-435-R-10 SBC, cable kit, software, documentation) |
| **CM-435-L-12** | 800MHz QuickStart Kit (CM-435-R-12 SBC, cable kit, software, documentation) |

# CoreModule® 86DX2

## PC/104 Single Board Computer with Vortex86DX2 System-on-Chip

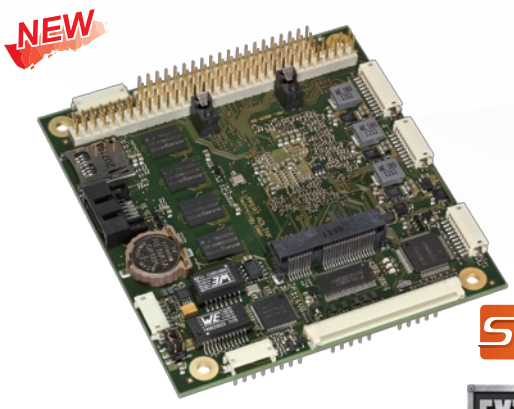


### Features

- Ultra low power, DM&P Vortex86DX2 SoC
- Full ISA bus support with built in redundancy
- 1 GB onboard DDR2 memory
- 2x Ethernet ports
- 8x GPIO
- VGA and 18/24-bit single channel LVDS
- HD Audio
- PCI Express Mini Card and MicroSD slot
- -40°C to +85°C operating temperature range
- Supports Smart Embedded Management Agent (SEMA) functions

## Specifications

### Core System

| | |
|---|---|
| CPU | Vortex86DX2 SoC, 800/1000 MHz |
| Memory | 1GB DDR2 soldered on board |
| BIOS | AMI BIOS, integrated in SoC |
| SEMA | Yes |
| Hardware Monitor | 2x LAN, watchdog |
| Watchdog Timer | Yes, 3 different |
| Expansion Busses | PC/104 (ISA) |
| | PCI Express Mini Card slot |

### Video

| | |
|---|---|
| VGA Interface | Yes |
| LVDS Interface | 18/24 bit single channel |

### Audio

| | |
|---|---|
| Chipset | ALC886 |
| Audio Codec | HD Audio |

### Ethernet

| | |
|---|---|
| Chipset | 1x Integrated PHY |
| Speed | 10/100 Mbit |
| Chipset | 1x i210IT |
| Speed | 10/100/1000 Mbit |

### Multi I/O and Storage

| | |
|---|---|
| USB | 4x USB 2.0 host ports (3x I/O header, 1x MiniPCI Express slot) |
| SATA | SATA 1.0 |
| MicroSD | 1x standard slot for micro SD and micro SDHC, UDMA-2 mode |
| Serial | 4x RS-232/RS-485 |
| PS2 | Keyboard and mouse |
| LPT | Yes |
| GPIO | 8 (alternative TTL level COM Port or PWM)) |
| A/D | 8x Input |

### Power

| | |
|---|---|
| Input Power | 5V only |
| Power Consumption | TBD (estimated ~ 6 to 7 W) |
| Power States | no ACPI |

### Mechanical and Environmental

| | |
|---|---|
| Dimensions | 96 mm x 90 mm (3.775" x 3.550") |
| Operating Temperature | Standard: 0°C to 60°C |
| | Industrial: -20°C to 70°C |
| | Extended: -40°C to 85°C |
| Storage Temperature | -55°C to 85°C |
| Cooling | TBD |
| Humidity | 10% to 90% (non-condensing) |
| Shock | Non-operating: 50G peak-to-peak, 11ms duration, MIL-STD-202G Method 213B |
| Vibration | Operating: 11.95 Grms, 50-2000 Hz, each axis, MIL-STD-202G Method 214A |
| MTBF | TBD |

### Operating Systems

| | |
|---|---|
| Standard Support | Windows XP, Windows XPe, Win CE 6.0, Linux |

## Functional Diagram

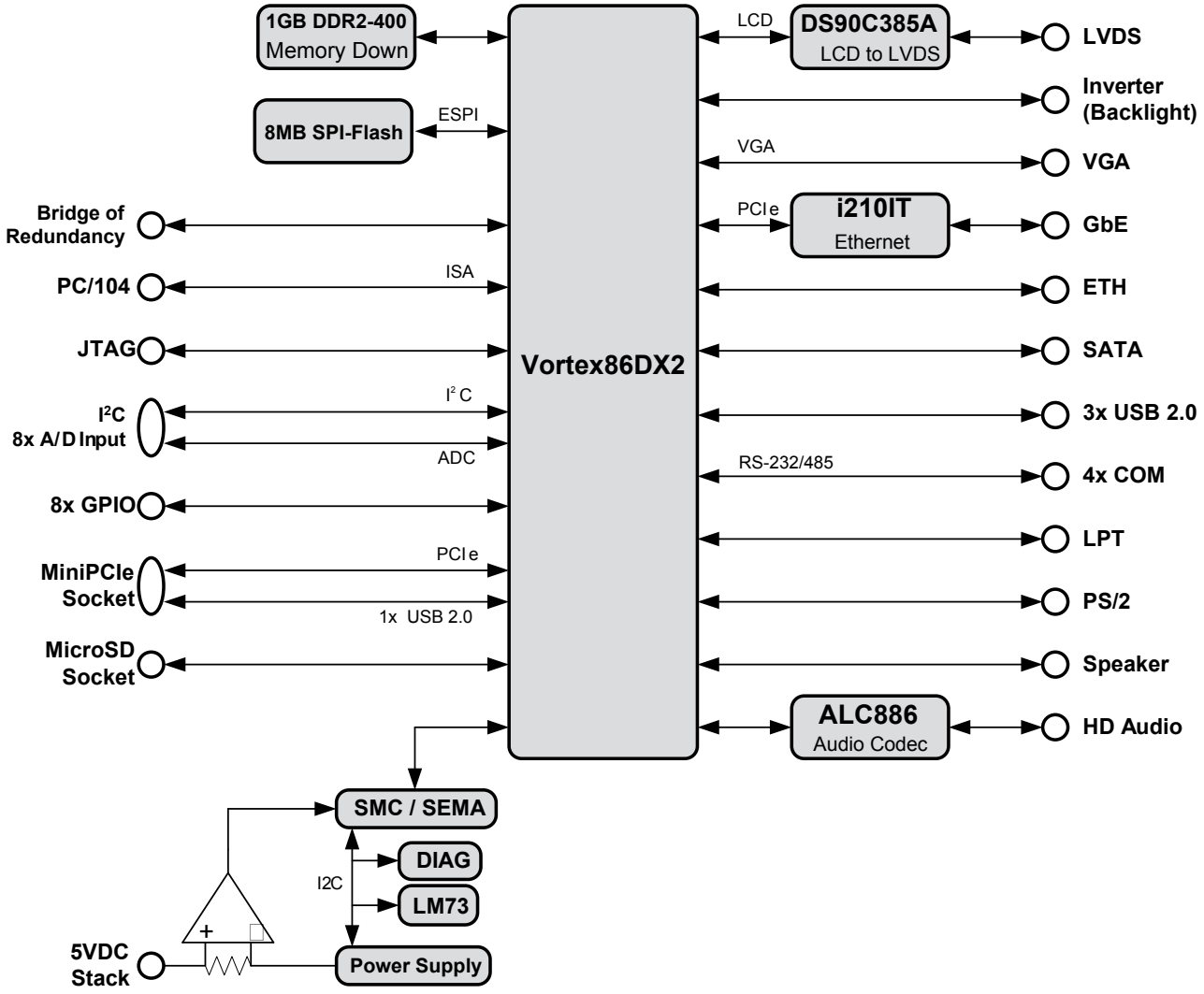


## Ordering Information

### Modules

| Model Number | Description/Configuration |
|---|---|
| 702-0018-10 | PC/104, CM-86DX2, Vortex86DX2, 1GHz, 1GB RAM, 0°C to +60°C |
| 802-0018-10 | PC/104, CM-86DX2, Vortex86DX2, 1GHz, 1GB RAM, -20°C to +70°C |
| 902-0018-10 | PC/104, CM-86DX2, Vortex86DX2, 800MHz, 1GB RAM, -40°C to +85°C |

# Cool FrontRunner-AF

## PC/104-Plus Single Board Computer with AMD® G-Series Processor

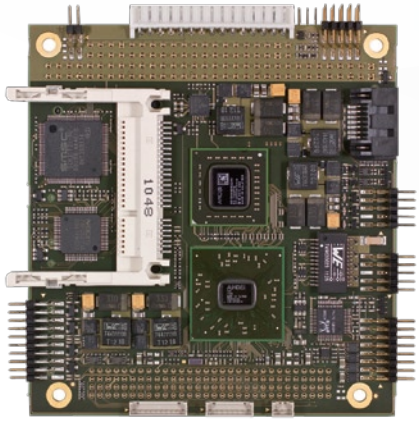

## Features

- AMD Fusion® APU, single and dual core
- Up to 4 GB DDR3 RAM
- Graphics: Radeon HD6320 (T56N), Radeon HD6250 (T40R)
- LVDS: 1920 x 1200 resolution
- Gigabit Ethernet, 6x USB 2.0
- SATA port
- High Definition Audio
- Power consumption: max. 18 W
- Extended temperature range: -40°C +85°C
- Supports Smart Embedded Management Agent (SEMA) functions

## Specifications

### Core System

| | |
|---|---|
| Processor | AMD® T40R, 1.0 GHz, single core |
| | AMD® T56N, 1.65 GHz, dual core |
| BIOS | EFI |
| | 2x SPI Flash (fail save) |
| Board Format | PC/104-Plus |
| | 96 mm x 90 mm (3.775" x 4.050") |
| Platform controller hub | AMD® Hudson-E1 Fusion |
| ISA Bus | PC/104 via LPC to ISA bridge |
| PCI Bus | PC/104, 3.3V compliant |
| | Peripherals need their own 3.3V supply |
| SPI Bus | Yes |
| Watchdog | Yes (1 second to 255 minutes) |
| PS/2 | Yes |

### Video

| | |
|---|---|
| Graphics | Radeon HD6320, 500MHz (T56N) |
| | Radeon HD6250, 280MHz (T40R) |
| VGA | Yes |
| LVDS | Dual channel, 18/24-bit |
| | 1920 x 1200 pixel at 60 Hz |

### Audio

| | |
|---|---|
| HD audio | ALC886 |

### Ethernet

10/100/1000 Mbit

### Multi I/O and Storage

| | |
|---|---|
| RAM (max.) | Up to 4GB DDR3 SO-DIMM |
| USB | 6x USB 2.0 |
| Serial | 2x RS-232/422/485 |
| SATA | 1x SATA 6 Gb/s |
| | 1x CFast slot |

### Super I/O

| | |
|---|---|
| | SCH3112 |
| GPIO | 8 |

### Power

| | |
|---|---|
| RTC Backup | Lithium battery, CR1225 replaceable |
| Power Supply | 5 V ±5 % |
| | All voltages are generated on-board |
| Power Consumption | 10W to 18W, depending on processor and memory |
| SEMA | Condition monitoring, with power sense |

### Mechanical and Environmental

| | |
|---|---|
| Cooling | T40R: passive |
| | T56N: active |
| MTBF | 172.356 hours at 25°C |
| Operating Temperature | Standard: 0°C to +60°C |
| | Industrial: -20°C to +70°C |
| | Extended: -40°C to +85°C (only T40R) |
| Panel Backlight | +12 V, +5 V, including control signal |
| Shock/Vibration | Non-operating: 40G peak-to-peak, 11ms duration, MIL-STD-202G Method 213B |
| | Operating: 11.95 Grms, 50-2000 Hz, each axis, MIL-STD-202G Method 214A |
| Status LED | HDD, power mode, |
| | live, 2x Ethernet, watchdog |

### Operating Systems

| | |
|---|---|
| Standard Support | Windows XP, Windows XPe, Windows 7, Windows Embedded Standard 7, Linux |

## Functional Diagram

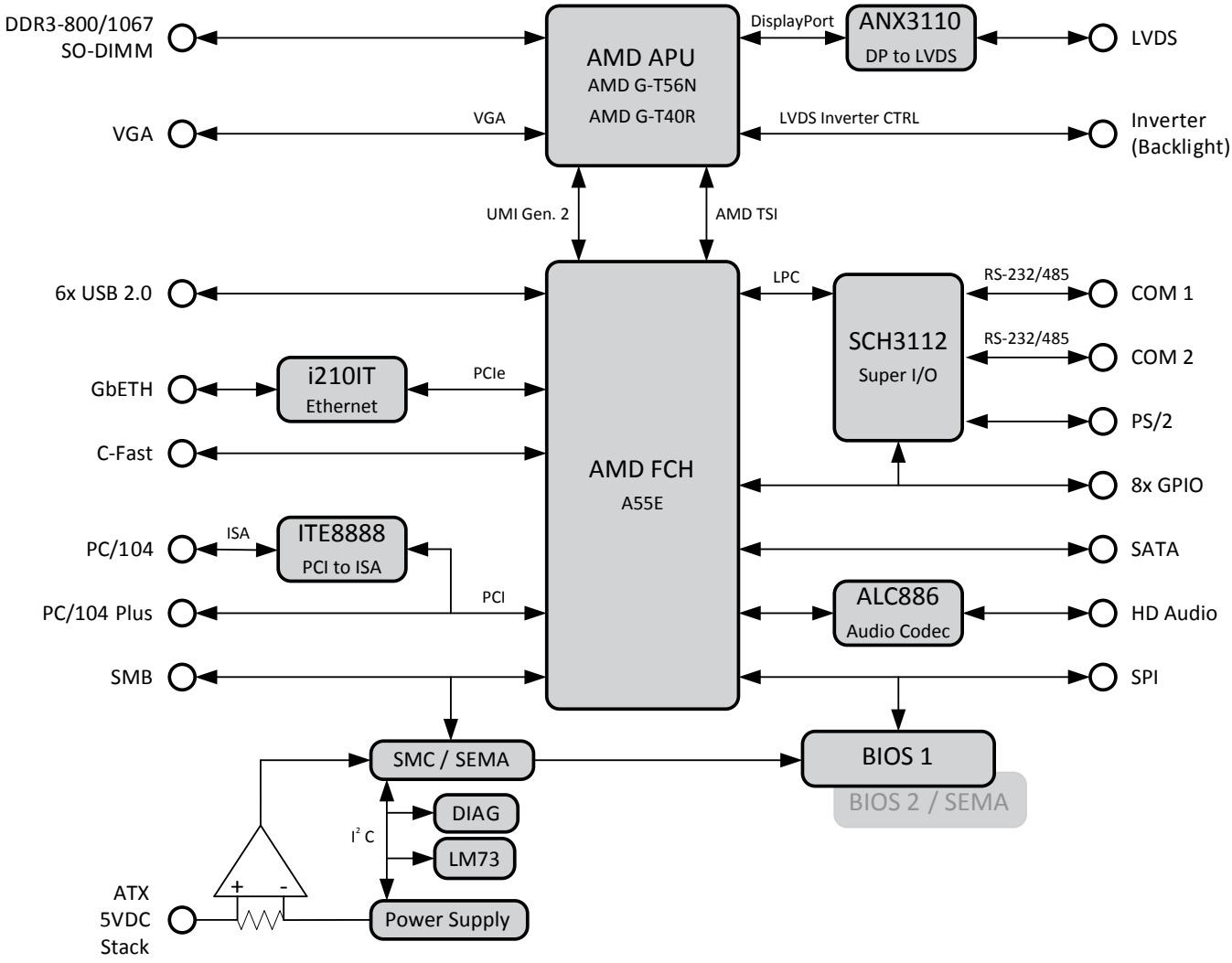


## Ordering Information

### Modules

| Model Number | Description/Configuration |
|---|---|
| **703-0028-10** | PC/104-*Plus*, CFR-AF, AMD T56N, 1.65 GHz DC, incl. heat spreader, 0°C to +60°C |
| **803-0028-10** | PC/104-*Plus*, CFR-AF, AMD T56N, 1.65 GHz DC, incl. heat spreader, -20°C to +70°C |
| **703-0029-10** | PC/104-*Plus*, CFR-AF, AMD T40R, 1.0 GHz SC, incl. heat spreader, 0°C to +60°C |
| **803-0029-10** | PC/104-*Plus*, CFR-AF, AMD T40R, 1.0 GHz SC, incl. heat spreader, -20°C to +70°C |
| **903-0029-10** | PC/104-*Plus*, CFR-AF, AMD T40R, 1.0 GHz SC, incl. heat spreader, -40°C to +85°C |

### Accessories

| Model Number | Description/Configuration |
|---|---|
| **760-0029-10** | RAM, DDR3, SO-DIMM, 2GB, 0°C to +60°C |
| **960-0029-10** | RAM, DDR3, SO-DIMM, 2GB, -40°C to +85°C |
| **760-0030-10** | RAM, DDR3, SO-DIMM, 4GB, 0°C to +60°C |
| **960-0030-10** | RAM, DDR3, SO-DIMM, 4GB, -40°C to +85°C |
| **763-0022-10** | Cable set, CFR-AF |
| **765-0049-11** | Heat sink, passive, CFR-AF |
| **765-0049-12** | Heat sink, active, CFR-AF |