Epoxy Coated Inductor



AIAP-01

Request Samples Check Inventory

9.14 x ϕ3.9mm
10.70 x ϕ4.6mm
RoHS/RoHS II Compliant
MSL Level = 1

Features

- Low-cost axial leaded inductors
- High current rating
- Wide inductance range.

Applications

- Power Supplies
- Switching circuits
- TV and audio equipment
- Telecommunication devices
- RF and other filters

Electrical Specifications

Part Number	Inductance	Tolerance	DC Resistance	Self Resonant Frequency	Rated Current	Inductance Code	Dimensions
	0.1MHz/1.0V		Max	Min.	Typ.		(refer to mechanical section)
Units	µH	%	Ω	MHz	mA		
Symbol	L	M	DCR	SRF	Idc		
AIAP-01-1R0	1.0	K	0.030	190	3300	1R0	A
AIAP-01-1R2	1.2	K	0.019	170	3200	1R2	A
AIAP-01-1R5	1.5	K	0.020	160	3100	1R5	A
AIAP-01-1R8	1.8	K	0.023	150	2900	1R8	A
AIAP-01-2R2	2.2	K	0.031	130	2600	2R2	A
AIAP-01-2R7	2.7	K	0.033	120	2500	2R7	A
AIAP-01-3R3	3.3	K	0.054	110	1900	3R3	A
AIAP-01-3R9	3.9	K	0.060	100	1800	3R9	A
AIAP-01-4R7	4.7	K	0.068	86	1700	4R7	A
AIAP-01-5R6	5.6	K	0.074	64	1600	5R6	A
AIAP-01-6R8	6.8	K	0.080	44	1600	6R8	A
AIAP-01-8R2	8.2	K	0.087	32	1500	8R2	A
AIAP-01-100	10	K	0.095	25	1500	100	A
AIAP-01-120	12	K	0.11	17	1400	120	A
AIAP-01-150	15	K	0.15	13	1200	150	A
AIAP-01-180	18	K	0.16	10	1100	180	A
AIAP-01-220	22	K	0.19	8.4	1000	220	A
AIAP-01-270	27	K	0.22	8.0	950	270	A
AIAP-01-330	33	K	0.29	7.6	910	330	A
AIAP-01-390	39	K	0.26	7.1	880	390	A
AIAP-01-470	47	K	0.35	6.0	760	470	A
AIAP-01-560	56	K	0.47	5.8	650	560	A
AIAP-01-680	68	K	0.53	4.3	610	680	A
AIAP-01-820	82	K	0.60	4.1	580	820	A
AIAP-01-101	100	K	0.67	3.9	550	101	A

ABRACON

5101 Hidden Creek Ln, Spicewood TX 78669
Phone: 512-371-6159 Fax: 512-351-8858
For terms and conditions of sales, please visit:
www.abracon.com

REVISION I : 7/2/2024

ABRACON IS ISO9001-2015 CERTIFIED

Epoxy Coated Inductor



AIAP-01

Request Samples Check Inventory

9.14 x ϕ3.9mm
10.70 x ϕ4.6mm
RoHS/RoHS II Compliant
MSL Level = 1

Part Number	Inductance	Tolerance	DC Resistance	Self Resonant Frequency	Rated Current	Inductance Code	Dimensions
	0.1MHz/1.0V		Max	Min.	Typ.		(refer to mechanical section)
Units	µH	%	Ω	MHz	mA		
Symbol	L	M	DCR	SRF	Idc		
AIAP-01-121	120	K	0.9	3.6	470	121	A
AIAP-01-151	150	K	1.2	3.2	410	151	A
AIAP-01-181	180	K	1.4	2.8	380	181	A
AIAP-01-221	220	K	1.9	2.3	320	221	A
AIAP-01-271	270	K	2.1	2.1	310	271	A
AIAP-01-331	330	K	2.4	1.9	290	331	A
AIAP-01-391	390	K	3.0	1.7	260	391	A
AIAP-01-471	470	K	3.4	1.4	240	471	A
AIAP-01-561	560	K	4.7	1.3	210	561	A
AIAP-01-681	680	K	6.4	1.2	180	681	A
AIAP-01-821	820	K	7.1	1.1	170	821	A
AIAP -01-102	1000	K	9.0	1.0	160	102	A
AIAP -01-122	1200	K	9.0	0.94	150	122	B
AIAP -01-152	1500	K	13.5	0.76	130	152	B
AIAP -01-182	1800	K	14.0	0.72	120	182	B
AIAP -01-222	2200	K	19.0	0.64	100	222	B
AIAP -01-272	2700	K	25.0	0.56	90	272	B
AIAP -01-332	3300	K	29.0	0.53	83	332	B
AIAP -01-392	3900	K	34.0	0.48	77	392	B
AIAP -01-472	4700	K	45.0	0.45	74	472	B
AIAP -01-562	5600	K	55.0	0.40	63	562	B
AIAP -01-682	6800	K	60.0	0.36	59	682	B
AIAP -01-822	8200	K	75.0	0.29	54	822	B
AIAP -01-103	10000	K	85.0	0.27	52	103	B

Test Conditions and equipment

Test frequency: 7.9MHz for 1.0µH to 8.2µH, 1KHz for 10µH to 10000µH

I_{DC}: 10% typical inductance drop.

Operating Temperature

-40ºC ~ +105ºC

Storage Temperature

-40ºC ~ +85ºC

AIAP-01 is RoHS/RoHS II Compliant and Pb free

ABRACON

5101 Hidden Creek Ln, Spicewood TX 78669
Phone: 512-371-6159 Fax: 512-351-8858
For terms and conditions of sales, please visit:
www.abracon.com

REVISION I : 7/2/2024

ABRACON IS ISO9001-2015 CERTIFIED

Epoxy Coated Inductor



AIAP-01

Request Samples Check Inventory

9.14 x ϕ3.9mm
10.70 x ϕ4.6mm
RoHS/RoHS II Compliant
MSL Level = 1

Part Number Identification

AIAP-01 - ☐ ☐ - ☐

Inductance Code	Tolerance	Packaging
See Electrical Specification table	K = ± 10%	T: Tape and Reel (See Packaging)

Marking

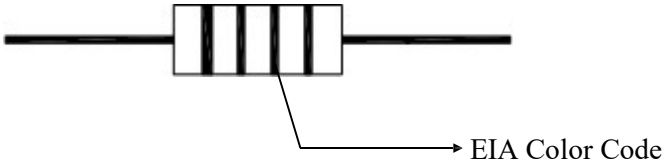

Mechanical Specifications

Part Dimensions: A

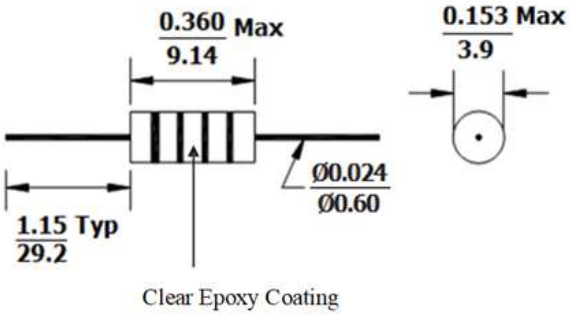

Dimensions: Inches / mm

ABRACON

5101 Hidden Creek Ln, Spicewood TX 78669
Phone: 512-371-6159 Fax: 512-351-8858
For terms and conditions of sales, please visit:
www.abracon.com

REVISION I : 7/2/2024

ABRACON IS ISO9001-2015 CERTIFIED

Epoxy Coated Inductor



AIAP-01

Request Samples | Check Inventory

9.14 x ϕ3.9mm
10.70 x ϕ4.6mm
RoHS/RoHS II Compliant
MSL Level = 1

Part Dimensions: B

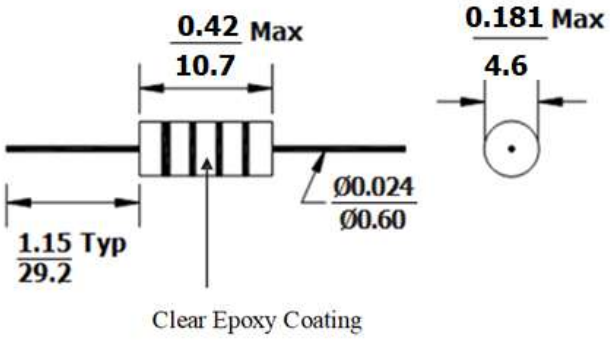

Dimensions: Inches / mm

Wave Soldering Profile

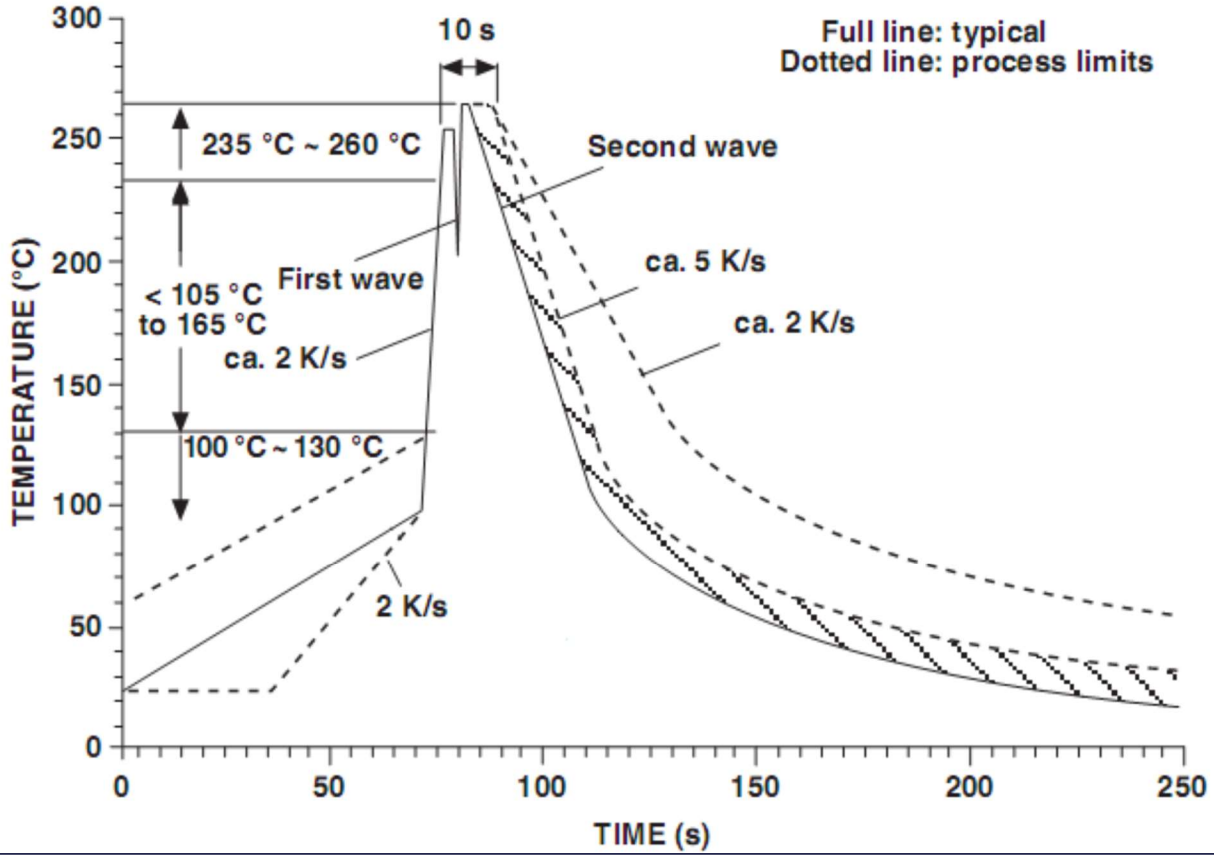

ABRACON

5101 Hidden Creek Ln, Spicewood TX 78669
Phone: 512-371-6159 Fax: 512-351-8858
For terms and conditions of sales, please visit:
www.abracon.com

REVISION I : 7/2/2024

ABRACON IS ISO9001-2015 CERTIFIED

Epoxy Coated Inductor



AIAP-01

Request Samples Check Inventory

9.14 x ϕ3.9mm
10.70 x ϕ4.6mm
RoHS/RoHS II Compliant
MSL Level = 1

Packaging

Tape & Reel: 2,500 pcs/reel

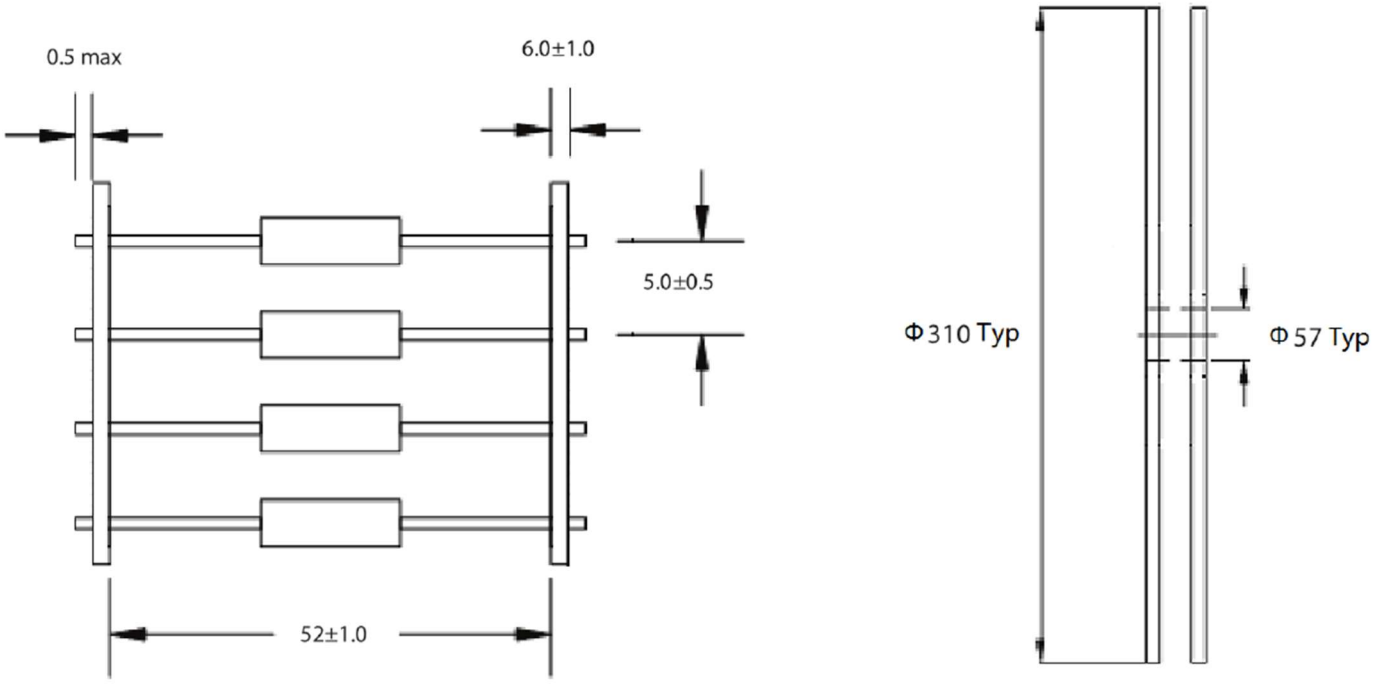

Dimensions: mm

ATTENTION: Abracon LLC's products are Commercial-Off-The-Shelf (COTS, which are designed, intended and validated for use in commercial, industrial and automotive applications. The customer is responsible for testing and verifying the performance of an Abracon solution to meet their system-level requirements.

ABRACON

5101 Hidden Creek Ln, Spicewood TX 78669
Phone: 512-371-6159 Fax: 512-351-8858
For terms and conditions of sales, please visit:
www.abracon.com

REVISION I : 7/2/2024

ABRACON IS ISO9001-2015 CERTIFIED