MULTILAYER CERAMIC CHIP INDUCTOR



AIMC-0201

Request Samples | Check Inventory

0.6 x 0.3 x 0.3 mm
RoHS/RoHS II Compliant
MSL Level = N/A

Features

- High self-resonant frequency
- Multilayer monolithic construction yields high reliability
- Excellent solderability & heat resistance for reflow soldering

Applications

- Bluetooth
- Mobile phones such as GSM, CDMA, PDC
- High frequency telecommunication circuits
- Other high frequency circuit general use

Electrical Specifications

Part No.	L(nH)	Tolerance	Q (Typ. @ 500MHz)	Q (Typ.@ 800MHz)	Q (Typ.@ 1800MHz)	L, Q Test Freq. (MHz)	SRF(MHz) (min)	DCR(Ω) (max)	Ir(mA) (max)
AIMC-0201-0N6	0.6	B, C, S	24	32	54	500	20000	0.06	850
AIMC-0201-0N7	0.7	B, C, S	24	32	54	500	20000	0.06	800
AIMC-0201-0N8	0.8	B, C, S	24	32	54	500	18000	0.07	800
AIMC-0201-0N9	0.9	B, C, S	24	32	54	500	18000	0.07	750
AIMC-0201-1N0	1.0	B, C, S	24	32	54	500	17000	0.08	750
AIMC-0201-1N1	1.1	B, C, S	19	26	45	500	17000	0.10	750
AIMC-0201-1N2	1.2	B, C, S	19	25	43	500	17000	0.10	750
AIMC-0201-1N3	1.3	B, C, S	19	25	40	500	17000	0.12	600
AIMC-0201-1N4	1.4	B, C, S	19	24	39	500	16000	0.12	600
AIMC-0201-1N5	1.5	B, C, S	19	24	39	500	15000	0.12	600
AIMC-0201-1N6	1.6	B, C, S	19	24	39	500	15000	0.13	600
AIMC-0201-1N7	1.7	B, C, S	19	24	39	500	15000	0.15	600
AIMC-0201-1N8	1.8	B, C, S	19	24	39	500	15000	0.15	600
AIMC-0201-1N9	1.9	B, C, S	18	24	38	500	12500	0.15	600
AIMC-0201-2N0	2.0	B, C, S	17	24	38	500	12500	0.15	600
AIMC-0201-2N1	2.1	B, C, S	17	24	37	500	11000	0.15	600
AIMC-0201-2N2	2.2	B, C, S	17	24	38	500	11000	0.15	600
AIMC-0201-2N3	2.3	B, C, S	17	24	37	500	10000	0.20	500
AIMC-0201-2N4	2.4	B, C, S	17	23	36	500	10000	0.20	500
AIMC-0201-2N5	2.5	B, C, S	17	23	35	500	10000	0.20	500
AIMC-0201-2N6	2.6	B, C, S	17	22	34	500	10000	0.20	500
AIMC-0201-2N7	2.7	B, C, S	17	22	34	500	10000	0.20	500
AIMC-0201-2N8	2.8	B, C, S	17	22	34	500	9500	0.20	500
AIMC-0201-2N9	2.9	B, C, S	17	22	34	500	9500	0.20	500
AIMC-0201-3N0	3.0	B, C, S	17	22	34	500	9500	0.25	450
AIMC-0201-3N1	3.1	B, C, S	17	22	34	500	8500	0.25	450
AIMC-0201-3N2	3.2	B, C, S	17	22	33	500	8200	0.25	450
AIMC-0201-3N3	3.3	B, C, S	18	23	34	500	8100	0.25	450
AIMC-0201-3N4	3.4	B, C, S	17	23	33	500	8000	0.25	450
AIMC-0201-3N5	3.5	B, C, S	17	23	33	500	7900	0.25	450
AIMC-0201-3N6	3.6	B, C, S	16	23	33	500	7700	0.30	400
AIMC-0201-3N7	3.7	B, C, S	16	23	33	500	7600	0.30	400
AIMC-0201-3N8	3.8	B, C, S	16	22	33	500	7500	0.30	400
AIMC-0201-3N9	3.9	B, C, S	16	22	33	500	7400	0.30	400
AIMC-0201-4N3	4.3	H, J, S	16	21	32	500	6800	0.40	350
AIMC-0201-4N7	4.7	H, J, S	16	22	33	500	6200	0.40	350
AIMC-0201-5N1	5.1	H, J, S	17	22	34	500	5900	0.40	350
AIMC-0201-5N6	5.6	H, J	16	21	33	500	5500	0.40	350

ABRACON

5101 Hidden Creek Ln Spicewood TX 78669
Phone: 512-371-6159 | Fax: 512-351-8858
For terms and conditions of sales, please visit:
www.abracon.com

REVISION: F 08-16-23

ABRACON IS ISO9001-2015 CERTIFIED

MULTILAYER CERAMIC CHIP INDUCTOR



AIMC-0201

Request Samples | Check Inventory

0.6 x 0.3 x 0.3 mm
RoHS/RoHS II Compliant
MSL Level = N/A

Electrical Specifications (cont'd)

Part No.	L(nH)	Tolerance	Q (Typ. @ 500MHz)	Q (Typ.@ 800MHz)	Q (Typ.@ 1800MHz)	L, Q Test Freq. (MHz)	SRF(MHz) (min)	DCR(Ω) (max)	Ir(mA) (max)
AIMC-0201-6N2	6.2	H, J	18	23	34	500	5100	0.48	300
AIMC-0201-6N8	6.8	H, J	17	22	32	500	5500	0.50	300
AIMC-0201-7N5	7.5	H, J	16	21	31	500	4700	0.50	300
AIMC-0201-8N2	8.2	H, J	16	21	31	500	4300	0.56	250
AIMC-0201-9N1	9.1	H, J	16	20	30	500	4100	0.70	250
AIMC-0201-10N	10	H, J	16	20	28	500	3800	0.70	250
AIMC-0201-12N	12	H, J	16	20	27	500	3400	0.70	250
AIMC-0201-15N	15	H, J	15	19	24	500	2600	0.70	250
AIMC-0201-18N	18	H, J	15	19	23	500	2300	0.80	200
AIMC-0201-22N	22	H, J	15	19	22	500	2200	1.20	150
AIMC-0201-27N	27	H, J	15	19	15	500	2000	1.60	140
AIMC-0201-33N	33	H, J	14	15	8	300	2000	2.20	120
AIMC-0201-39N	39	H, J	14	15	6	300	1600	2.30	120
AIMC-0201-47N	47	H, J	14	15	-	300	1500	2.60	100
AIMC-0201-56N	56	H, J	13	13	-	300	1400	2.80	100
AIMC-0201-68N	68	H, J	13	11	-	300	1200	3.20	100
AIMC-0201-82N	82	H, J	12	10	-	300	1100	3.80	100
AIMC-0201-R10	100	H, J	12	10	-	300	1000	4.00	80
AIMC-0201-R12	120	H, J	12	8	-	300	1000	5.00	80

Parameters	Value
Abracon P/N	AIMC-0201 Series
Operating Temperature	-55°C to + 125°C
Storage Temperature	-10˚C ~ +40˚C, RH 70% (Max.)

Test Conditions and equipment

L, Q: High Accuracy RF Impedance /Material Analyzer-E4991A+16197A
DCR: High Accuracy Milliohmmeter-HP4338B
SRF: Agilent 8719ES
Ir: DC Power Supplier, Current Meter, Thermometer. $\Delta T \leq 20^{\circ}C$

Unless otherwise specified
Temperature: Ordinary Temperature (20±2°C)
Humidity: Ordinary Humidity (65±5%)
Atmospheric Pressure: 86 to 106 kPa

MULTILAYER CERAMIC CHIP INDUCTOR



AIMC-0201

Request Samples | Check Inventory

0.6 x 0.3 x 0.3 mm
RoHS/RoHS II Compliant
MSL Level = N/A

Part Identification

AIMC-0201- ☐☐ - ☐

Inductance Code	Tolerance	Packaging
Please refer to Electrical Spec table	B: ±0.1nH C: ±0.2nH S: ±0.3nH H: ±3% J: ±5%	T: Tape and Reel (15kpcs / reel)

Mechanical Specifications

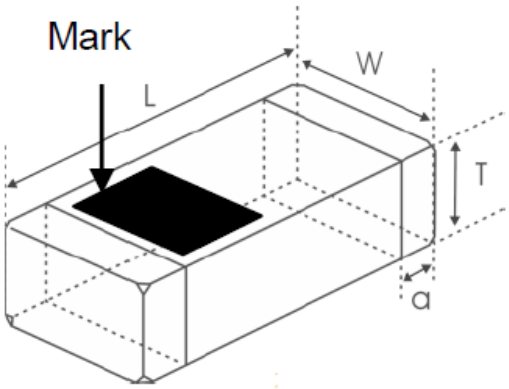

Series	L	W	T	a
AIMC-0201	0.60±0.05	0.30±0.05	0.30±0.05	0.10~0.20
	[0.024±0.002]	[0.012±0.002]	[0.012±0.002]	[0.004~0.008]

Dimension: mm [inch]

ABRACON

5101 Hidden Creek Ln Spicewood TX 78669
Phone: 512-371-6159 | Fax: 512-351-8858
For terms and conditions of sales, please visit:
www.abracon.com

REVISION: F 08-16-23

ABRACON IS ISO9001-2015 CERTIFIED

MULTILAYER CERAMIC CHIP INDUCTOR



AIMC-0201

Request Samples Check Inventory

0.6 x 0.3 x 0.3 mm
RoHS/RoHS II Compliant
MSL Level = N/A

Reflow Profile

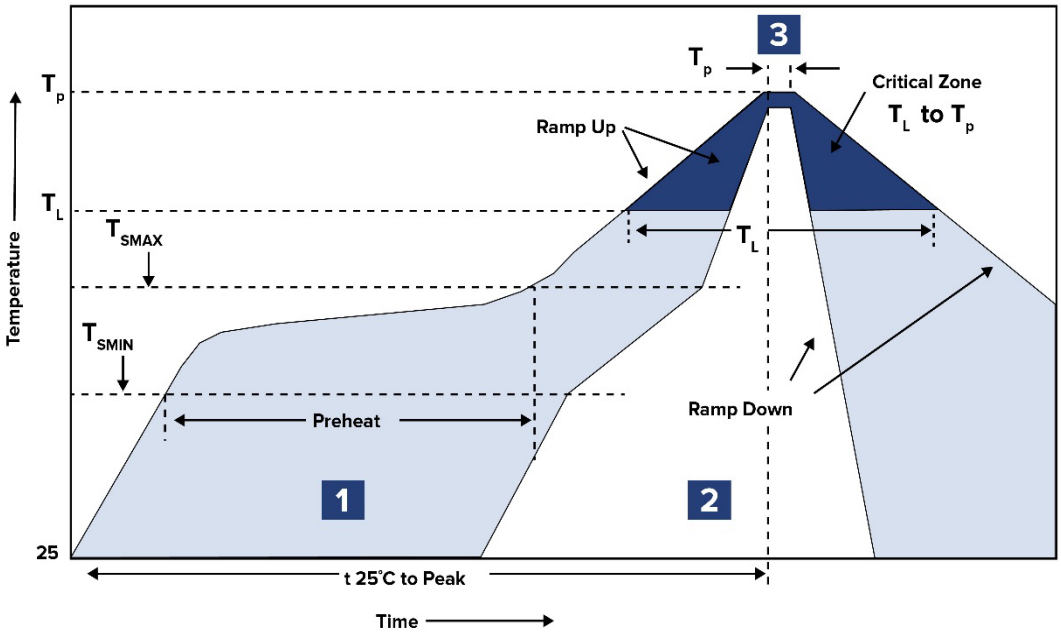

Zone	Description	Temperature	Times
1	Preheat	T_{SMIN} ~ T_{SMAX} 150°C ~ 200°C	60 ~ 120 sec.
2	Reflow	T_L 217°C	60 ~ 90 sec.
3	Peak heat	T_P 260°C	10 sec. MAX

ABRACON

5101 Hidden Creek Ln Spicewood TX 78669
Phone: 512-371-6159 | Fax: 512-351-8858
For terms and conditions of sales, please visit:
www.abracon.com

REVISION: F 08-16-23

ABRACON IS ISO9001-2015 CERTIFIED

MULTILAYER CERAMIC CHIP INDUCTOR



AIMC-0201

Request Samples | Check Inventory

0.6 x 0.3 x 0.3 mm
RoHS/RoHS II Compliant
MSL Level = N/A

Packaging

T: 15,000pcs / reel

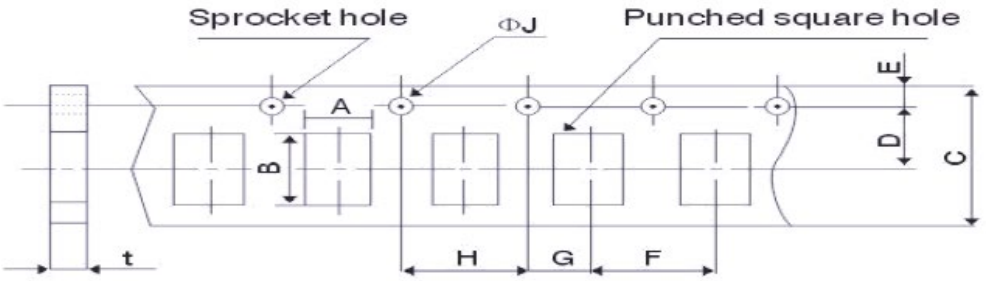

Codes	A	B	C	D	E	F	G	H	ΦJ	t(max)
AIMC-0201	0.4±0.05	0.7± 0.05	8.0± 0.3	3.5± 0.05	1.75± 0.1	2.0± 0.05	2.0± 0.05	4.0± 0.1	1.5+0.1/-0	0.55±0.05

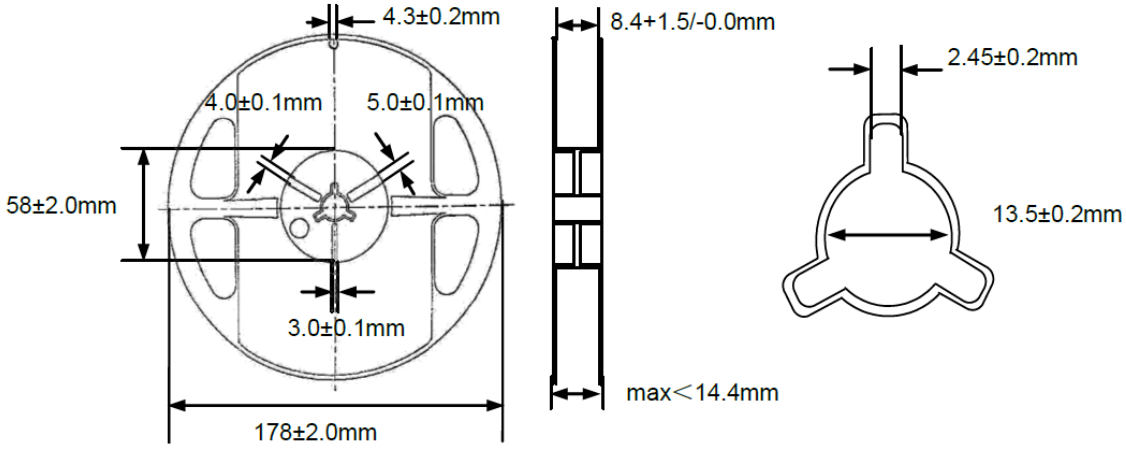

Dimension: mm

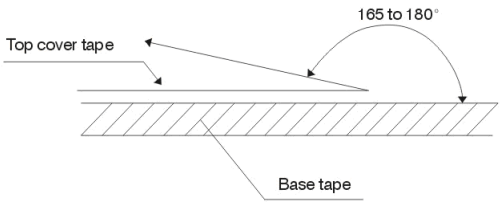

Peel force0.3 ~ 0.7N
Peel speed: 300mm/min

ATTENTION: Abracon LLC's products are COTS – Commercial-Off-The-Shelf products; suitable for Commercial, Industrial and, where designated, Automotive Applications. Abracon's products are not specifically designed for Military, Aviation, Aerospace, Life-dependent Medical applications or any application requiring high reliability where component failure could result in loss of life and/or property. For applications requiring high reliability and/or presenting an extreme operating environment, written consent and authorization from Abracon LLC is required. Please contact Abracon LLC for more information.

ABRACON

5101 Hidden Creek Ln Spicewood TX 78669
Phone: 512-371-6159 | Fax: 512-351-8858
For terms and conditions of sales, please visit:
www.abracon.com

REVISION: F 08-16-23

ABRACON IS ISO9001-2015 CERTIFIED