10/100 Base-TX Single Port SMD LAN Transformer Module

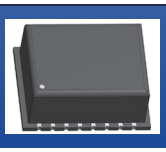

ALANM100X1

12.0 x 9.4 x 5.0 mm
RoHS/RoHS II Compliant
MSL = 1

Features

- Uniform transformer windings
- Fully automated production lines
- Standard 1.27mm pin pitch
- Lead-less SMD construction resistant to tin whiskering
- Meets IEEE 802.3u standard
- Multiple schematic and pinout options
- High performance magnetics for EMI suppression and common mode noise rejection
- 5.0mm height

Applications

Communications
- Servers
- Switches
- Routers

Commercial/Industrial
- Video surveillance
- VoIP & IP telecommunications
- Transaction machines
- WiFi gateways

IoT/Consumer
- Smart Lighting
- Smart Appliance

EOL

Part Identification

ALANM100X1 - □ □ □ □

Package Size
8: 16-Pin

Schematic
F10
F02
F00
F25

Operating Temp.
E: 0 °C to +70 °C
D: -40 °C to +85 °C

Packaging
B: Bulk
T: 850 pcs/reel

ABRACON LLC
5101 Hidden Creek Ln Spicewood TX 78669
Phone: 512-371-6159 | Fax: 512-351-8858
For terms and conditions of sales, please visit:
www.abracon.com

REVISED: 05-6-19

ABRACON IS
ISO9001-2015
CERTIFIED

10/100 Base-TX Single Port SMD LAN Transformer Module

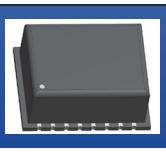

ALANM100X1

12.0 x 9.4 x 5.0 mm
RoHS/RoHS II Compliant
MSL = 1

Electrical Specifications at 25°C

Part Number	Insertion Loss (dB Max)	Return Loss (dB Min)				Crosstalk (dB Min)			CM to CM Rejection Ratio (dB Min)			DM to CM Rejection Ratio (dB Min)		
	0.5-100 MHz	1-40 MHz	60 MHz	80 MHz	100 MHz	0.5-40 MHz	60 MHz	100 MHz	30 MHz	60 MHz	100 MHz	30 MHz	60 MHz	100 MHz
ALANM100X1-8F10	1.5	16	14	12	10	40	37	33	42	37	33	42	37	33
ALANM100X1-8F02	1.5	16	14	12	10	40	37	33	42	37	33	42	37	33
ALANM100X1-8F00	1.5	16	14	12	10	40	37	33	42	37	33	42	37	33
ALANM100X1-8F25	1.5	16	14	12	10	40	37	33	42	37	33	42	37	33

Part Number	Inductance (uH Min)	Leakage Inductance (uH)	Hi Pot (VDC)	Weight (g)
Test Condition	@100kHz, 0.2V, 8mA DC Bias	@ 100kHz Td to Mx	6 sec.	Per Piece
ALANM100X1-8F10	200	0.5	1500	0.95
ALANM100X1-8F02	200	0.5	1500	0.95
ALANM100X1-8F00	200	0.5	1500	0.95
ALANM100X1-8F25	200	0.5	1500	0.95

EOL

ABRACON LLC
5101 Hidden Creek Ln Spicewood TX 78669
Phone: 512-371-6159 | Fax: 512-351-8858
For terms and conditions of sales, please visit:
www.abracon.com

REVISED: 05-6-19

ABRACON IS
ISO9001-2015
CERTIFIED

10/100 Base-TX Single Port SMD LAN Transformer Module

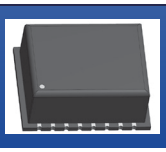

ALANM100X1

12.0 x 9.4 x 5.0 mm
RoHS/RoHS II Compliant
MSL = 1

Mechanical Dimensions

8: 16-pin

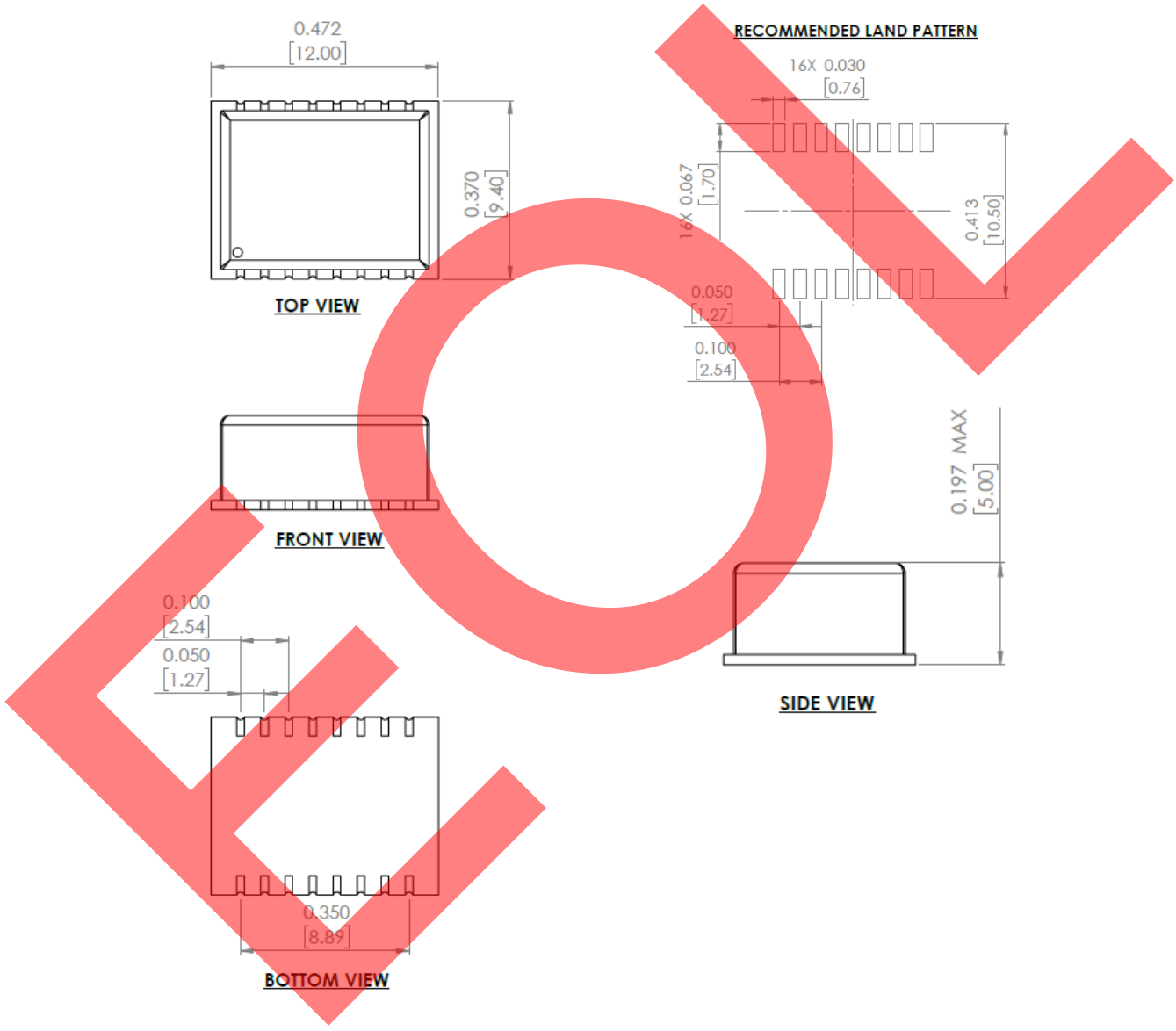

Unless otherwise specified, all tolerances are ±0.25 in mm
Dimensions: mm

ABRACON LLC

5101 Hidden Creek Ln Spicewood TX 78669
Phone: 512-371-6159 | Fax: 512-351-8858
For terms and conditions of sales, please visit:
www.abracon.com

REVISED: 05-6-19

ABRACON IS
ISO9001-2015
CERTIFIED

10/100 Base-TX Single Port SMD LAN Transformer Module

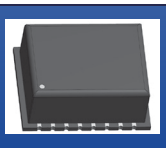

ALANM100X1

12.0 x 9.4 x 5.0 mm
RoHS/RoHS II Compliant
MSL = 1

Schematics

16-pin

F10

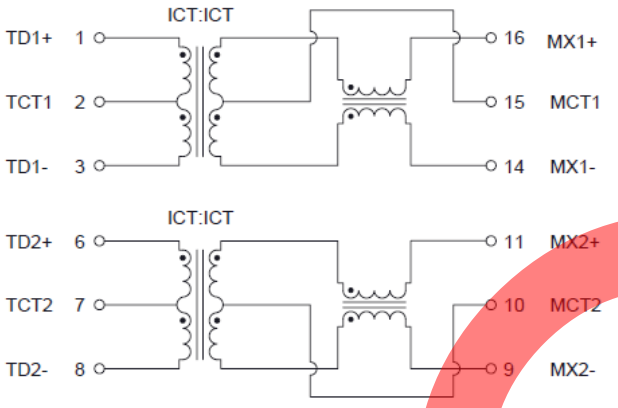

F00

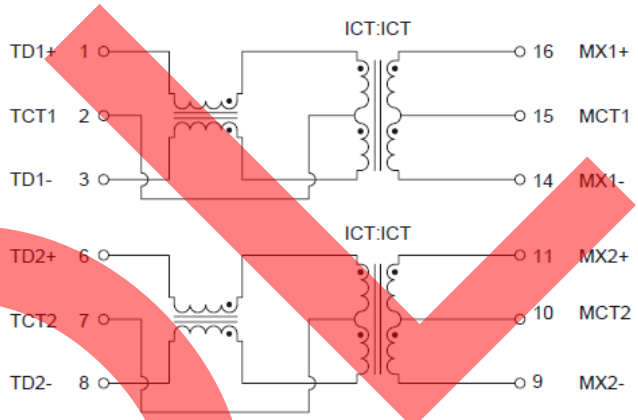

F02

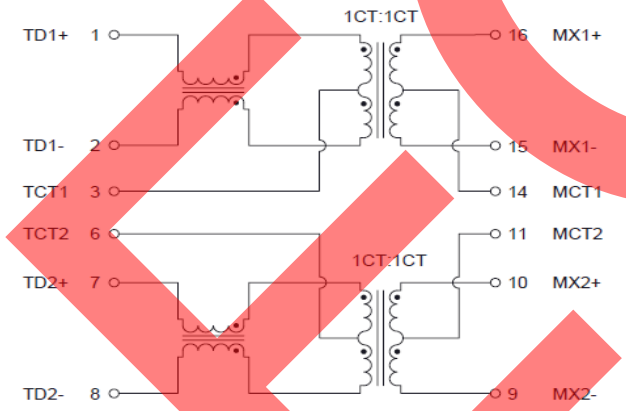

F25

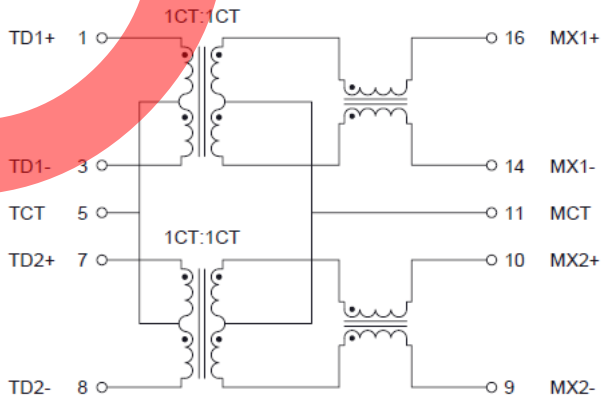

ABRACON LLC
5101 Hidden Creek Ln Spicewood TX 78669
Phone: 512-371-6159 | Fax: 512-351-8858
For terms and conditions of sales, please visit:
www.abracon.com

REVISED: 05-6-19

ABRACON IS
ISO9001-2015
CERTIFIED

10/100 Base-TX Single Port SMD LAN Transformer Module

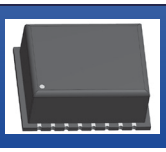

ALANM100X1

12.0 x 9.4 x 5.0 mm
RoHS/RoHS II Compliant
MSL = 1

Reflow Profile

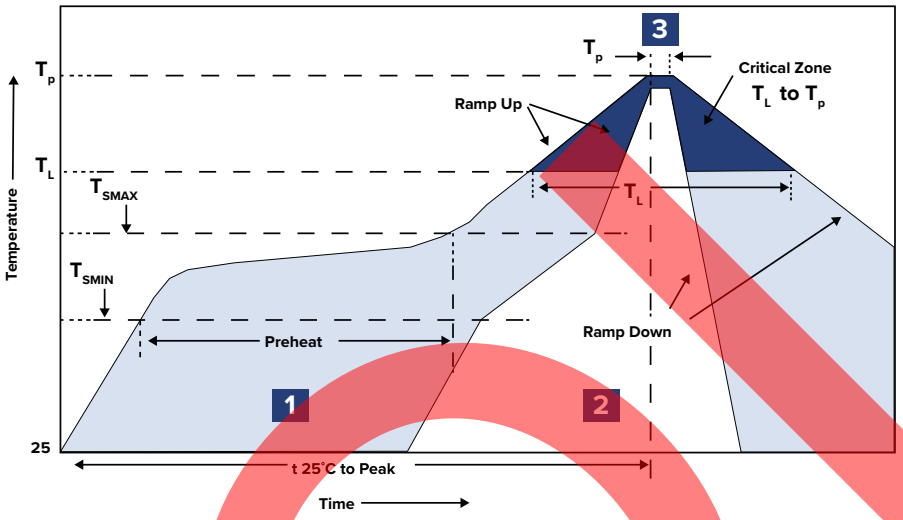

Zone	Description	Temperature	Time
1	Preheat / Soak	T_{SMIN} ~ T_{SMAX} 150°C ~ 200°C	60 ~ 180 sec.
2	Reflow	T_L 245°C	20 ~ 40 sec.
3	Peak heat	T_P 260°C±5°C	10 sec. MAX

Packaging

T = 850 pcs/reel

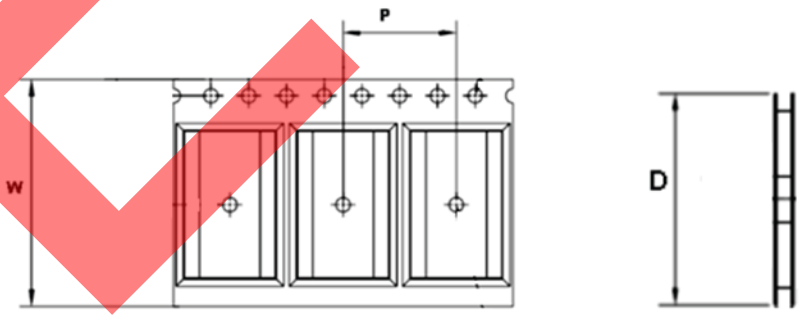

W	P	D
24.0	16.0	Θ330

Dimensions: mm

REVISED

ABRACON LLC
5101 Hidden Creek Ln Spicewood TX 78669
Phone: 512-371-6159 | Fax: 512-351-8858
For terms and conditions of sales, please visit:
www.abracon.com

REVISED: 05-6-19

ABRACON IS
ISO9001-2015
CERTIFIED