THIN FILM CHIP INDUCTORS

ATFC-0402

RoHS/RoHS II Compliant



1.00 x 0.50 x 0.32mm

FEATURES:

- Photolithographic single layer ceramic chip
- High SRF, excellent Q, superior temperature stability
- Tight tolerance ± 0.1nH available
- Self resonant frequency controlled within 10%
- Stable inductance in high frequency circuit
- Highly stable design for critical needs

APPLICATIONS:

- Cell phones and GPS
- VCO, TCXO Circuit and RF Transceiver Module
- Wireless LAN, Bluetooth Module, Communication Appliances

STANDARD SPECIFICATIONS:

PARAMETERS	
ABRACON P/N:	ATFC-0402
Operating temperature:	-45˚C to +85˚C
Storage temperature:	Mounted: -45˚C to +85˚C Packaged: +15˚C to 28˚C, 80% RH max

Part Number ATFC-0402- Inductance Code	L(nH)	Tolerance	Q, Min @ 500MHz	SRF Min (GHz)	R_{DC} Max (Ω)	I_{DC} Max (mA)
ATFC-0402-0N2	0.2	B, C, S	13	14	0.10	800
ATFC-0402-0N3	0.3	B, C, S	13	14	0.10	800
ATFC-0402-0N4	0.4	B, C, S	13	14	0.10	800
ATFC-0402-0N5	0.5	B, C, S	13	14	0.15	700
ATFC-0402-0N6	0.6	B, C, S	13	14	0.15	700
ATFC-0402-0N8	0.8	B, C, S	13	14	0.15	700
ATFC-0402-0N9	0.9	B, C, S	13	14	0.15	700
ATFC-0402-1N0	1.0	B, C, S	13	12	0.15	700
ATFC-0402-1N1	1.1	B, C, S	13	12	0.15	700
ATFC-0402-1N2	1.2	B, C, S	13	12	0.15	700
ATFC-0402-1N3	1.3	B, C, S	13	10	0.25	700
ATFC-0402-1N4	1.4	B, C, S	13	10	0.25	700
ATFC-0402-1N5	1.5	B, C, S	13	10	0.25	700
ATFC-0402-1N6	1.6	B, C, S	13	10	0.25	560
ATFC-0402-1N7	1.7	B, C, S	13	10	0.25	560
ATFC-0402-1N8	1.8	B, C, S	13	10	0.25	560
ATFC-0402-1N9	1.9	B, C, S	13	8	0.35	560
ATFC-0402-2N0	2.0	B, C, S	13	8	0.35	560
ATFC-0402-2N1	2.1	B, C, S	13	8	0.35	440
ATFC-0402-2N2	2.2	B, C, S	13	8	0.35	440
ATFC-0402-2N3	2.3	B, C, S	13	8	0.35	440
ATFC-0402-2N4	2.4	B, C, S	13	8	0.35	440
ATFC-0402-2N5	2.5	B, C, S	13	8	0.35	440
ATFC-0402-2N6	2.6	B, C, S	13	8	0.35	440
ATFC-0402-2N7	2.7	B, C, S	13	8	0.35	440
ATFC-0402-2N8	2.8	B, C, S	13	6	0.45	380
ATFC-0402-2N9	2.9	B, C, S	13	6	0.45	380
ATFC-0402-3N0	3.0	B, C, S	13	6	0.45	380
ATFC-0402-3N1	3.1	B, C, S	13	6	0.45	380
ATFC-0402-3N2	3.2	B, C, S	13	6	0.45	380
ATFC-0402-3N3	3.3	B, C, S	13	6	0.45	380
ATFC-0402-3N4	3.4	B, C, S	13	6	0.55	380
ATFC-0402-3N5	3.5	B, C, S	13	6	0.55	380
ATFC-0402-3N6	3.6	B, C, S	13	6	0.55	380
ATFC-0402-3N7	3.7	B, C, S	13	6	0.55	340
ATFC-0402-3N8	3.8	B, C, S	13	6	0.55	340
ATFC-0402-3N9	3.9	B, C, S	13	6	0.55	340
ATFC-0402-4N3	4.3	B, C, S	13	6	0.65	320
ATFC-0402-4N7	4.7	B, C, S	13	6	0.65	320
ATFC-0402-5N4	5.4	B, C, S	13	6	0.85	280
ATFC-0402-5N6	5.6	B, C, S	13	6	0.85	280
ATFC-0402-5N9	5.9	B, C, S	13	6	0.85	280
ATFC-0402-6N5	6.5	B, C, S	13	6	1.05	260
ATFC-0402-6N8	6.8	B, C, S	13	6	1.05	260

ABRACON LLC

5101 Hidden Creek Ln Spicewood TX 78669
Phone: 512-371-6159 | Fax: 512-351-8858
For terms and conditions of sales, please visit:
www.abracon.com

REVISED: 05-04-23

ABRACON IS ISO9001-2015 CERTIFIED

THIN FILM CHIP INDUCTORS



1.00 x 0.50 x 0.32mm

ATFC-0402

RoHS/RoHS II Compliant

Key Electrical Specifications (Con'd)

Part Number ATFC-0402- Inductance Code	L(nH)	Tolerance	Q, Min @ 500MHz	SRF Min (GHz)	RDC Max (Ω)	IDC Max (mA)
ATFC-0402-7N2	7.2	B, C, S	13	6	1.05	260
ATFC-0402-8N0	8.0	B, C, S	13	5.5	1.25	220
ATFC-0402-8N1	8.1	B, C, S	13	5.5	1.25	220
ATFC-0402-8N2	8.2	B, C, S	13	5.5	1.25	220
ATFC-0402-9N1	9.1	B, C, S	13	5.5	1.25	220
ATFC-0402-10N	10.0	F, G, H, J	13	4.5	1.35	200
ATFC-0402-10N8	10.8	F, G, H, J	13	4.5	1.35	200
ATFC-0402-12N	12.0	F, G, H, J	13	3.7	1.55	180
ATFC-0402-13N8	13.8	F, G, H, J	13	3.7	1.75	180
ATFC-0402-15N	15.0	F, G, H, J	13	3.3	1.75	130
ATFC-0402-17N	17.0	F, G, H, J	13	3.1	1.95	100
ATFC-0402-18N	18.0	F, G, H, J	13	3.1	2.15	100
ATFC-0402-20N8	20.8	F, G, H, J	13	2.8	2.55	90
ATFC-0402-22N	22.0	F, G, H, J	13	2.8	2.65	90
ATFC-0402-27N	27.0	F, G, H, J	13	2.5	3.25	75
ATFC-0402-33N	33.0	J	13	2.5	4.50	75

Test Conditions and Equipments

Inductance (L)

a. Test equipment: Agilent4287A+Agilent16196C
b. Test frequency: 500MHz

PART IDENTIFICATION:

ATFC- 0402- ☐☐ - ☐

Inductance Code	Inductance Tolerance	Packaging
Please refer to the table above	B: ±0.1nH C: ±0.2nH S: ±0.3nH F: ±1% G: ±2% H: ±3% J: ±5%	T: Tape and Reel (10kpcs reel)

OUTLINE DIMENSIONS:

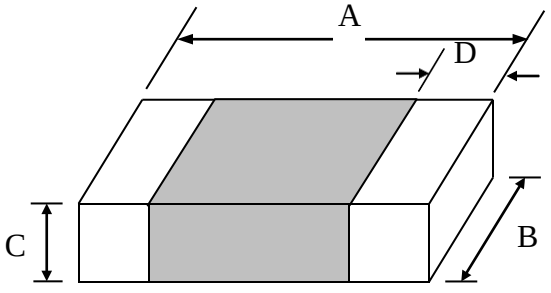

A	B	C	D
1.0±0.05	0.5±0.05	0.32±0.05	0.20±0.10

Recommended Land Pattern

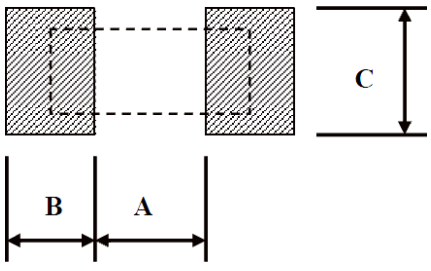

A	B	C
0.50	0.45	0.60±0.2

Dimension: mm

ABRACON LLC
5101 Hidden Creek Ln Spicewood TX 78669
Phone: 512-371-6159 | Fax: 512-351-8858
For terms and conditions of sales, please visit:
www.abracon.com

REVISED: 05-04-23

ABRACON IS ISO9001-2015 CERTIFIED

THIN FILM CHIP INDUCTORS

ATFC-0402

Pb RoHS/RoHS II Compliant



1.00 x 0.50 x 0.32mm

MATERIALS:

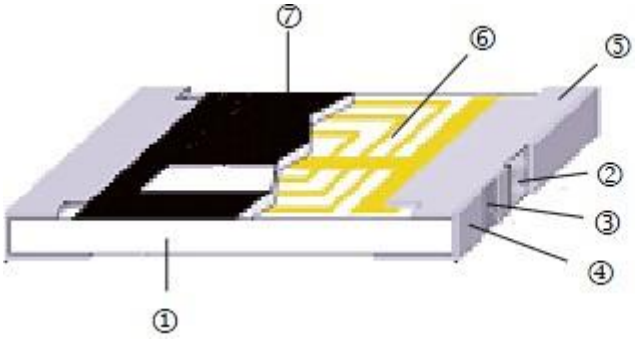

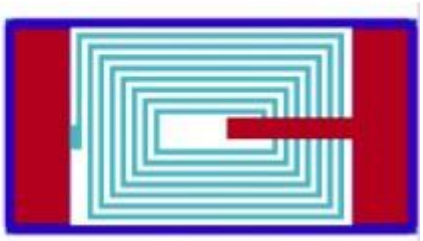

No.	Material
1	Alumina Substrate
2	Inner Electrode (Ni-Cr)
3	Barrier Layer (Ni)
4	External Electrode (Sn)
5	Edge Electrode
6	Cu Circuits
7	Overcoat

REFLOW PROFILE:

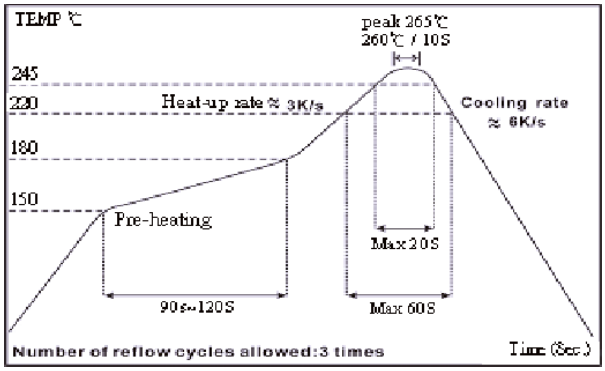

ABRACON LLC

5101 Hidden Creek Ln Spicewood TX 78669
Phone: 512-371-6159 | Fax: 512-351-8858
For terms and conditions of sales, please visit:
www.abracon.com

REVISED: 05-04-23

ABRACON IS
ISO9001-2015
CERTIFIED

THIN FILM CHIP INDUCTORS

ATFC-0402

Pb RoHS/RoHS II Compliant



1.00 x 0.50 x 0.32mm

TAPE & REEL:

T= tape and reel (10,000pcsreel)

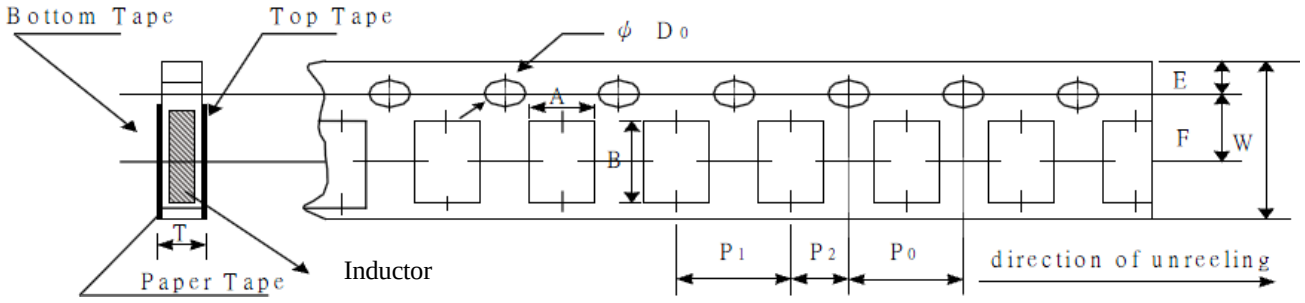

A	B	W	E	F	P0	P1	P2	ΦD0	T
0.70±0.05	1.16±0.05	8.00±0.10	1.75±0.05	3.50±0.05	4.00±0.10	2.00±0.05	2.00±0.05	1.55±0.05	0.40±0.03

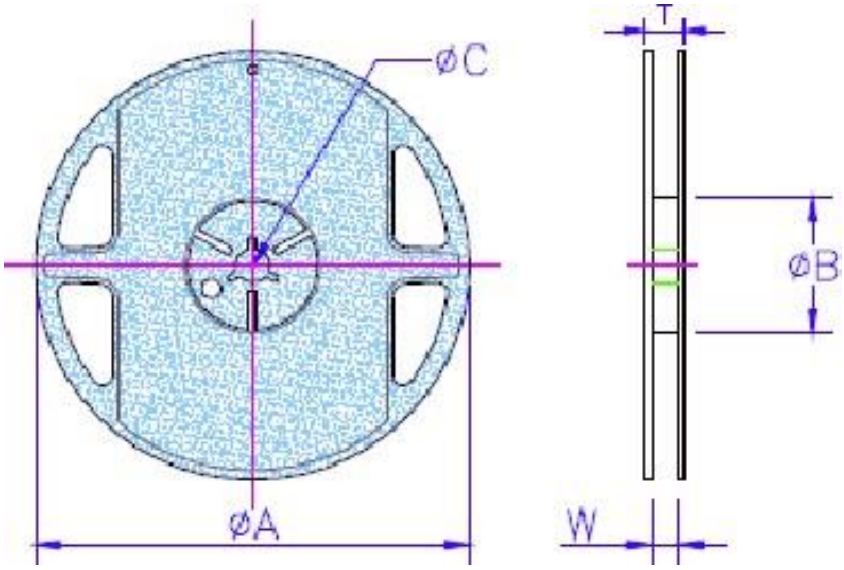

ΦA	ΦB	ΦC	W	T
178.0±1.0	60.0+1.0	13.5±0.7	9.5±1.0	11.5±1.0

Dimension: mm

ATTENTION: Abracon Corporation's products are COTS – Commercial-Off-The-Shelf products; suitable for Commercial, Industrial and, where designated, Automotive Applications. Abracon's products are not specifically designed for Military, Aviation, Aerospace, Life-dependant Medical applications or any application requiring high reliability where component failure could result in loss of life and/or property. For applications requiring high reliability and/or presenting an extreme operating environment, written consent and authorization from Abracon Corporation is required. Please contact Abracon Corporation for more information.

ABRACON LLC

5101 Hidden Creek Ln Spicewood TX 78669
Phone: 512-371-6159 | Fax: 512-351-8858
For terms and conditions of sales, please visit:
www.abracon.com

REVISED: 05-04-23

ABRACON IS ISO9001-2015 CERTIFIED