E93

5MP with Basic WDR,



- 5 Megapixel
- Fixed Lens with f1.9mm/F2.8
- Basic WDR
- Wide Angle
- Super wide angle
- Event trigger, response and notification

Specifications

Device

Product Type	Mini Dome
Maximum Resolution	5MP
Application Environment	Indoor
Image Sensor	Progressive Scan CMOS
Sensor Size	1/3.2 "
Effective Pixels	2592(H) X 1944(V) (5.04 MP)
Day / Night	No
Low Light Sensitivity	Standard
Minimum Illumination	Color: 0.1 lux at F2.8 (30 IRE, 2400 K)
Mechanical IR Cut Filter	No
IR LED	No
Electronic Shutter	1/5-1/2000 second (manual mode); 1/5-1/10000 second (auto mode)
Horizontal Resolution (TV Lines)	1350 TVL
S/N Ratio	75 dB

Lens

Focal Length	Fixed focal, f1.9mm
Aperture	F2.8
Iris	Fixed iris
Focus	Fixed focus
Lens Mount	Board mount
Horizontal Viewing Angle	126.9° (overview area) 77.4° (high detail area)
Vertical Viewing Angle	95.5°
Viewing Angle Adjustment	Pan: ±90°, Tilt: 0°-90°

Video

Compression	H.264 (Baseline/ Main/ High profile), MJPEG
Maximum Frame Rate vs. Resolution	15 fps at 2592 x 1944 15 fps at 2048 x 1536 30 fps at 1920 x 1080 30 fps at 1280 x 720 30 fps at 800 x 600 30 fps at 640 x 480 15 fps at 320 x 240
Multi-Streaming	Simultaneous dual streams based on two configurations
Bit Rate	28Kbps - 6Mbps (per stream)
Bit Rate Mode	Constant, Variable
Wide Dynamic Range	Basic WDR (74 dB)
Image Enhancement	White Balance, Brightness, Contrast, Sharpness, Automatic gain control, Flickerless
Digital Noise Reduction	DNR
Privacy Mask	4 configurable regions
Text Overlay	Yes
On-Screen Graphics (Picture Overlay)	Yes
Server-based Analytics	Object Line Counting, People Counting, Face Detection, Object Based Motion Detection, Tamper, Object Line Crossing Detection, Object Enter Area Detection, Missing Object Detection, Unattended Object Detection, Smoke Detection, Heat Map, Dwell Time, People Queue Detection, (Require PC-based or standalone IVS or ALPR Server. Contact ACTi support for recommendations on how to maximize analytical accuracy)
Image Orientation	Flip, Mirror

Network

Network Protocol & Service	IPv4/v6, TCP, UDP, DHCP, PPPoE, HTTP, HTTPS, DNS, DDNS, NTP, RTP, RTSP, RTCP, SMTP, FTP, IGMP, ICMP, ARP, Bonjour, UPnP, QoS, SNMP, IEEE 802.1X
Ethernet Port	1 x RJ-45 connector
Security	IP address filtering, HTTPS encryption, Password protected user level, Anonymous login, IEEE 802.1X network access control, Standard IoT Security (anti-hacking, anti-malware)

Event

Event Trigger	Video motion detection (3 regions), Video streams loss, System log buffer overrun, Remove system log, Logon events (Login Failure, Login Success, Block an Account)

Event Response	Notify control center, Change camera settings, Command other devices, E-mail notification with snapshots, Push notification to mobile device, Save video to local storage, Upload video or snapshot to FTP server, Upload video to NVR server

System

System Monitor	CPU loading, memory usage and network statistics via API
System Log	Support
Watchdog	Support

Integration

Unified Solution	Fully compatible with ACTi software
Software Development Kit	Yes
GPS Position	Manual setting
Edge Recording	Support (integration with NVR by ONVIF Profile G or proprietary protocol)*
ONVIF Compliant	Yes, Profile S, Profile G, Profile T, Profile Q
GB28181 Compliant	Yes
Web Browser	IE 11, Google Chrome, Microsoft Edge, Apple Safari
Auto Firmware Upgrade	Yes

Interface

Local Storage	MicroSDHC, MicroSDXC Memory Card Slot (card not included, up to 256GB, Kingston or Sandisk only)
Operating Button	Reset Button

General

Power Source	PoE Class 2 (IEEE802.3af)
Power Consumption	6 W (PoE)
Weight	191g (0.42lb)
Dimensions	(Ø x H): 110mm x 58mm (4.3" x 2.3")
Environmental Casing	Vandal resistant (IK08)
Mount Type	Surface, Gang Box, Pendant, Converter for NPT Standard Mounts, Wall Mount, Pole Mount
Starting Temperature	-10°C ~ 50°C (14°F ~ 122°F)
Operating Temperature	-10°C ~ 50°C (14°F ~ 122°F)
Operating Humidity	10% - 85% RH
Approvals	CE Class B, FCC Class B, EAC, IPX8, IK08, UL (for optional PoE injector)
Warranty	3 Year(s). For extended warranty offering, see http://www.acti.com/support/warranty

* Edge Recording function is integrated with NVR 3 Corporate / NVR 3 Business / INR / GNR series.

Photo Indication

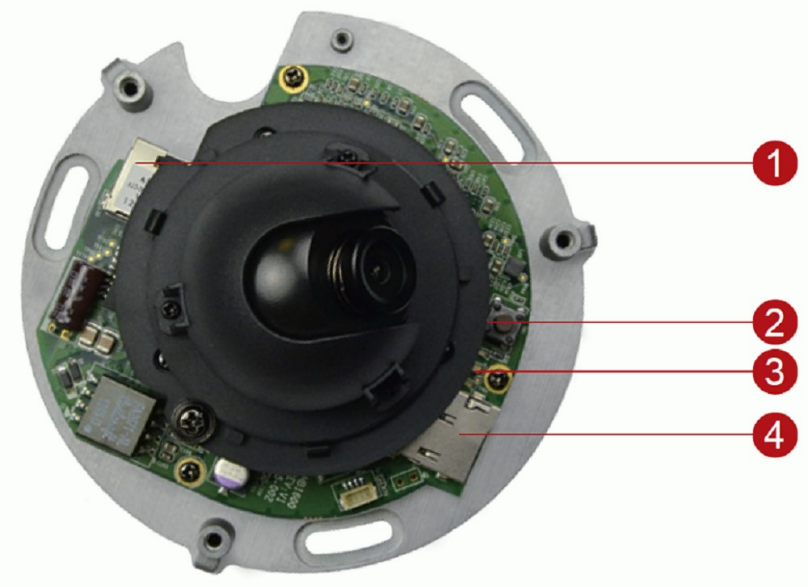

1. Ethernet Port
2. Power LED
3. Reset Button
4. Memory Card Slot

Dimension Diagram

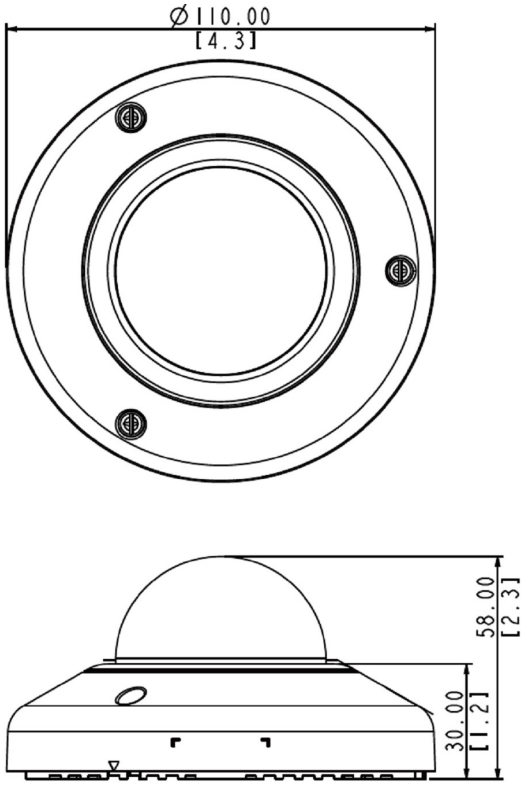

Unit: mm [inch]

- For product and mounting accessory information, visit: www.acti.com/products and www.acti.com/mountingselector
- All specifications are subject to change without notice.

Related Products

Mounting Accessories - Camera Mount

PMAX-0111		Straight Tube (for D5x, D9x, E5x, E9x, E9xx/M)
PMAX-0112		Extension Tube (for D5x, D9x, E5x, E9x, E9xx/M)
PMAX-0122		Straight Tube (for A71, A88, A9x,)
PMAX-0123		Extension Tube (for A71, A88, A9x,)
PMAX-0316		Wall Mount (for D5x, D9x, E5x, E78, E9x, E9xx/M)
PMAX-0506		Pole Mount (for A31, A4x, E78, E9x, E9xx), supports 2" to 3" Poles
PMAX-0805		Gang Box Converter (for D5x, D9x, E5x, E78, E9x, E9xx/M), supports 4" Round and 4" Octagon Boxes
PMAX-0809		Converter Ring, 1.0" NPT for Third-Party Mounting Accessories
PMAX-1400		Mount Kit (for D5x, D9x, E5x, E78, E9x, E9xx/M)

Note: Some mounting accessories may need additional accessories for installation. Please check www.acti.com/mountingselector for more information.

Lenses - Fixed Lens

PLEN-4101		Fixed Focal f1.9mm, Fixed Iris F2.8, Fixed Focus, Board Mount Lens

Dome Covers - Transparent Dome Cover

R701-50002		Dome Cover Housing with Transparent Dome Cover (for D91, D92, E91, E92, E94, E95)

Dome Covers - Smoked Dome Cover

PDCX-1106		Vandal Resistant Smoked Dome Cover for Indoor Mini Domes

Power Supply Accessories - PoE Injector

PPOE-0107		High PoE Injector IEEE 802.3at compliant, AC 100~240V, with universal connectors (for A416, A418, B913, B923, B934, Q450, Q75, VMGB-60X, Z37, Z71, Z952)

Network & Storage Peripherals - Data Switch

PPSW-0102		PLANET FGSD-1011HP 8-Port 802.3at PoE Switch (PoE Budget 120W)

PPSW-0105		PLANET GS-4210-8P2C 8-Port Gigabit 802.3at Managed PoE Switch (PoE Budget 120W)
PPSW-1101		PLANET GS-4210-24PL4C 24-Port Gigabit 802.3at Managed PoE Switch (PoE Budget 440W)
PPSW-3100		PLANET FGSW-1816HPS 16-Port 802.3at PoE Switch (PoE Budget 220W)

Extenders - PoE Extender

PPEX-0100		Veracity OUTREACH Max Power over Ethernet (PoE) Extender

Extenders - PoE over Coaxial Extender Kit

PPOC-0100		Planet LRP-101C-KIT Power over Coax Adapter Kit