ULTRAVOLT 15A SERIES

PRECISION DC TO HIGH VOLTAGE DC CONVERTERS

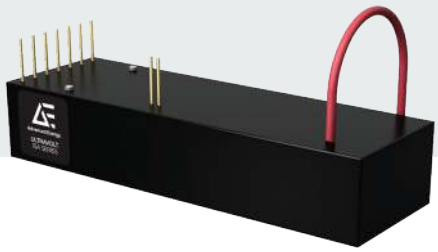

The UltraVolt® 15A series of regulated DC-to-DC converters provide general purpose high voltage power for a wide range of applications.

PRODUCT HIGHLIGHTS

- Regulated 0 to 15 kV DC high voltage output
- Single output: positive and negative polarity models
- Choice of 4, 15, or 30 W maximum output power
- 12 or 24 VDC input
- Maximum Iout capability down to 0 VDC
- Output ripple performance as low as 0.1%
- Available temperature coefficients to 25 ppm/°C
- Ease of installation with PCB or chassis-mount options
- Simplified integration with available 0 to 5 VDC or 0 to 10 VDC interface
- Reliable modular design
- Factory-configured performance, control, and integration options
- UL/cUL recognized, CE mark (LVD and RoHS), IEC-60950-1

TYPICAL APPLICATIONS

- DC to high voltage DC bias supplies for general purpose uses
- High-potential testing
- PMT/APD detectors and optical spectrometers
- Electrostatics, electrophoresis, and electrospray
- Mass spectrometers

AT A GLANCE

Maximum Output Voltage

15 kV DC

Maximum Output Power

30 W

Type

Single Output

Ripple

To 0.1%

Control Interface

Analog

Temperature Coefficient

To 25 ppm/°C

Ordering Information on Page 7

©2021 Advanced Energy Industries, Inc.

ELECTRICAL SPECIFICATIONS

High Voltage Output Range (Adjustable Regulated, Positive or Negative)[1]		0 to 15,000 VDC		
Input Voltage (VDC, Nominal)		12 VDC	24 VDC	
Power Output (Watts, Nominal)		4 W	15 W	30 W
DC Input				
Vin (Input Voltage) Range	VDC (positive polarity only)	11 to 16	23 to 30	
Vin (Nominal)	VDC	12	24	
Iin (Input Current, Nominal)	A @ 100% HVout, 100% LOAD	< 0.65	< 1.0	< 1.75
	A @ 100% HVout, 0% LOAD	< 0.4	< 0.25	< 0.25
	A @ disable/standby state	< 0.04		
DC Output				
HVout (Output Voltage)	VDC (positive polarity models = +HVout)	0 to +15,000		
	VDC (negative polarity models = -HVout)	0 to -15,000		
Iout (Output Current)	mA (max) @ 0 to 100% HVout, Vin (nominal)	0.26	1.0	2.0
Pout (Output Power)	Watts (max)	4	15	30
Ripple [2,3]	Vpp (standard configuration)	< 18	< 30	< 56
	Vpp (with -F-M option)	< 17	< 20	< 50
	Vpp (with -F-M-C option)	< 15	< 19	< 35

1 Standard product specifications shown unless noted. Custom configurations are available.

2 Nominal ripple measured @ 100% HVout. Valid for 10 to 100% HVout range.

3 Vpp = VDC peak to peak @ 100% HVout.

Stability and Regulation	
Stability	0.01% (100 ppm) @ 100% HVout (after 30 min warmup interval)
	0.02% (200 ppm) @ 100% HVout (per 8 h interval)
Line Regulation	0.01% (100 ppm) @ 100% HVout, 100% Pout, Vin (nominal)
Static Load Regulation	0.01% (100 ppm) @ 100% HVout, 0 to 100% LOAD
Temperature Coefficient	50 ppm/°C (standard configuration over operating temperature range)
	25 ppm/°C (with -25PPM option over operating temperature range)
Power-On Rise Time	< 150 msec @ 100% LOAD, < 50 msec @ 0% LOAD
	Contact factory for other options.

Environmental	
Operating Temperature Range	-40 to 65°C (-40 to 149°F) case temperature
Storage	-55 to 105°C (-67 to 222°F) case temperature
Humidity	0 to 95% RH, non-condensing
Altitude	Sea level to 3000 m (10,000 ft)
	Sea level to high vacuum (contact factory)

Regulatory	
Certifications	UL/cUL recognized, IEC-60950-1, CE mark (LVD and RoHS)

MECHANICAL SPECIFICATIONS

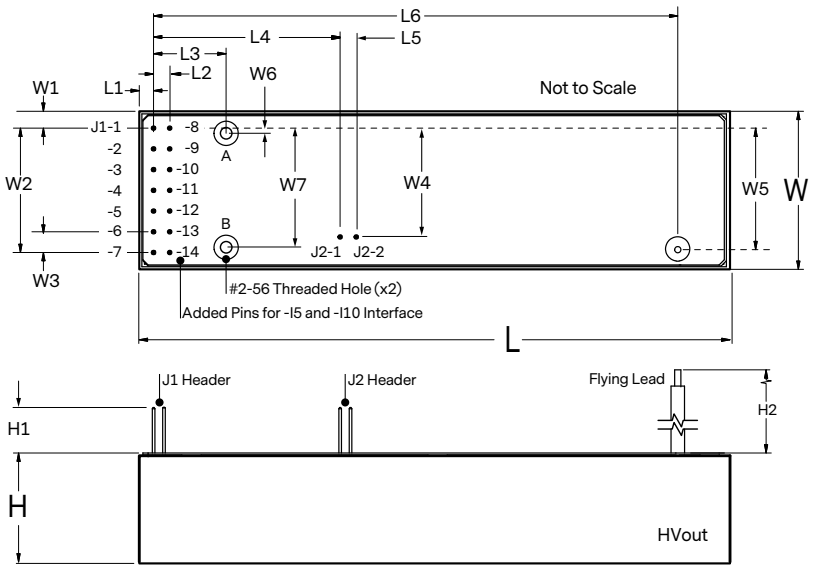

Dimensions			
Key	**Description** [1, 2, 3]	**mm**	**in**
L	**Overall Length**	**119.4**	**4.70**
L1	Case Exterior to J1-1	3.2	0.13
L2	Centerline, J1-1 to J1-8	2.5	0.10
L3	Centerline, J1-1 to Hole A (Hole B)	17.8	0.70
L4	Centerline, J1-1 to J2-1	45.7	1.80
L5	Centerline, J2-1 to J2-2	2.5	0.10
L6	Centerline, J1-1 to Flying Lead	102.5	4.04
W	**Overall Width**	**38.7**	**1.53**
W1	Case Exterior to J1-1	3.8	0.15
W2	Centerline, J1-1 to J1-7	30.5	1.20
W3	Centerline, J1-6 to J1-7	5.1	0.20
W4	Centerline, J1-1 to J2-1	26.7	1.05
W5	Centerline, J1-1 to Flying Lead	29.7	1.17
W6	Centerline, J1-1 to Hole A	1.3	0.05
W7	Centerline, Hole A to Hole B	27.9	1.10
H	**Case Height (Case Exterior to PCB , max)**	**25.4**	**1.00**
H1	Base of PCB to J1/J2 Header Tip	11.2	0.44
H2	Length of Standard Flying Lead	470	18.5

Volumes and Weights	15A Series	
	cm^3	**in^3**
Volume (Module Body Only)	117.5	7.2
	g	**oz**
Weight (Standard Configuration)	209	7.4

Construction	
Standard Case	Injection-molded plastic (Diallyl Phthalate, DAP, per ASTM-D-5948)
Optional Case	RF-tight aluminum (-C option) (Anodized per MIL-A-8625 Type II)
Optional Shield	Six-sided Mu-Metal (-M option)
Labels	Static-dissipative polyester
Cooling	Natural convection and conduction
Encapsulation	Silicone-based RTV (contact factory for other options)
Pins	Gold-plated bronze

1 Approximate nominal dimensions and weights for standard configuration shown. Contact factory for -M, -C or -E case options.

2 Standard case (DAP plastic) tolerances are ±1.27 mm (±0.050 in). Pin-to-pin tolerances are ±0.76 mm (±0.015 in).

3 Refer to outline drawings and 3D models for detailed information.

INTERFACE

The 15A series' standard interface permits voltage control and monitoring of both voltage and current output using analog DC signals whose range and polarity vary by model.

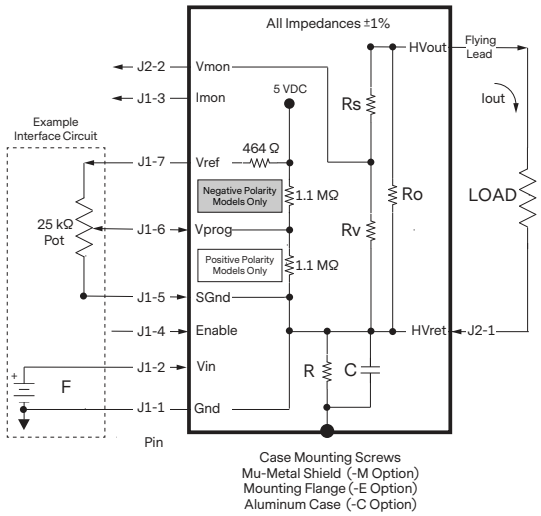

Standard Interface

Pin	Label	Type	Description
J1-1	Gnd	Ground	DC Input Power Ground
J1-2	Vin	Input	DC Input Power
J1-3	Imon	Output	Monitor HVout Current Level
J1-4	Enable	Input	Enable HVout [1]
J1-5	SGnd	Ground	Signal Ground
J1-6	Vprog	Input	Set HVout Voltage Level
J1-7	Vref	Output	Control Signal Reference [2]
J2-1	HVret	Ground	High Voltage Return [9]
J2-2	Vmon	Output	Monitor HVout Voltage Level
Flying Lead	HVout	Output	High Voltage Output

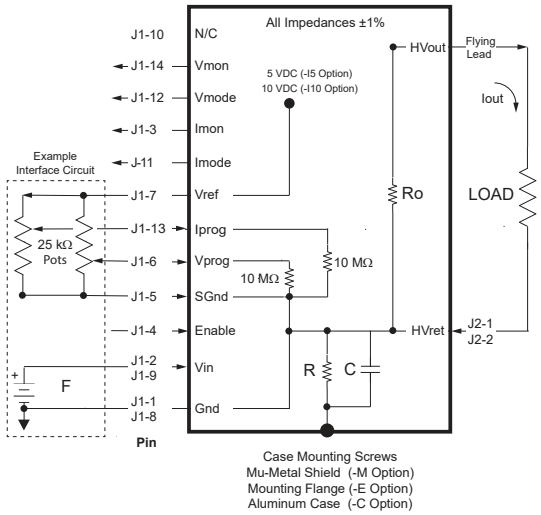

-I5 and -I10 Interface (Optional)

Pin	Label	Type	Description
J1-1	Gnd	Ground	DC Input Power Ground
J1-2	Vin	Input	DC Input Power
J1-3	Imon	Output	Monitor HVout Current Level [3, 8]
J1-4	Enable	Input	Enable HVout [4]
J1-5	SGnd	Ground	Signal Ground
J1-6	Vprog	Input	Set HVout Voltage Level
J1-7	Vref	Output	Control Reference Signal [5, 6]
J1-8	Gnd	Ground	DC Input Power Ground
J1-9	Vin	Input	DC Input Power
J1-10	N/C		No Connection
J1-11	Imode	Output	Current Mode Indicator [7]
J1-12	Vmode	Output	Voltage Mode Indicator [7]
J1-13	Iprog	Input	Set HVout Current Level
J1-14	Vmon	Output	Monitor HVout Voltage Level [3,8]
J2-1	HVret	Ground	High Voltage Return [9]
J2-2	HVret	Ground	High Voltage Return [9]
Flying Lead	HVout	Output	High Voltage Output

1 Signal inputs: LOW < 0.5 VDC, HIGH > 2.4 VDC (Default or N/C = ENABLED = HIGH)

2 5 VDC ±2% through 464 Ω impedance load

3 Can source an output impedance load > 10 kΩ

4 Signal input: LOW < 0.5 VDC, HIGH > 2.4 VDC (Default or N/C = DISABLED = LOW)

5 -I5 interface: 5 VDC ±0.1% @ 5 mA (nominal at case temperature = 25°C, 77°F)

6 -I10 interface: 10 VDC ±0.1% @ 5 mA (nominal at case temperature = 25°C, 77°F)

7 LOW = Mode ENABLED (open drain) will sink up to 30 mA.

8 Voltage/current monitors will source/sink to 2 mA.

9 For proper operation and safety, always route HVret signal through HVret connection.

INTERFACE CONTROL PARAMETERS

High Voltage Output Range		0 to 15,000 VDC		
Input Voltage (VDC, Nominal)		12 VDC	24 VDC	
Power Output (Watts, Nominal)		4 W	15 W	30 W
Standard Interface (Monitor/Control Voltage, Monitor Current)				
Scale Factors [1, 2, 3]	SVm (V/V) where HVout Monitor = SVm x Vmon	1000		
Positive Polarity Models	SVp (V/V) where HVout Control = SVp x Vprog	3233		
Negative Polarity Models	SVp (V/V) where HVout Control = SVp x (5 - Vprog)	-3233		
Positive and Negative Polarity Models	SIm (mA/V) where Iout Monitor = SIm x Imon	0.158	0.181	0.378
	SIp (mA/V) where Iout Control = SIp x Iprog	N/A		
Impedances [4]	Ro (HVout impedance, ±1%)	400 MΩ		
	Rs (Vmon upper tap impedance, ±1%)	750 MΩ		
	Rv (Vmon lower tap impedance, ±1%)	811 kΩ		
-I5 Interface (0 to 5 VDC, Monitor/Control Both Voltage and Current)				
Scale Factors [5, 6, 8, 9]	SVm (V/V) where HVout Monitor = SVm x Vmon	3000		
	SVp (V/V) where HVout Control = SVp x Vprog	3000		
	SIm (mA/V) where Iout Monitor = SIm x Imon	0.053	0.2	0.4
	SIp (mA/V) where Iout Control = SIp x Iprog	0.053	0.2	0.4
Impedances [4]	Ro (HVout impedance, ±1%)	400 MΩ		
-I10 Interface (0 to 10 VDC, Monitor/Control Both Voltage and Current)				
Scale Factors [5, 7, 8,9]	SVm (V/V) where HVout Monitor = SVm x Vmon	1500		
	SVp (V/V) where HVout Control = SVp x Vprog	1500		
	SIm (mA/V) where Iout Monitor = SIm x Imon	0.0267	0.1	0.2
	SIp (mA/V) where Iout Control = SIp x Iprog	0.0267	0.1	0.2
Impedances [4]	Ro (HVout impedance, ±1%)	400 MΩ		
Other Interface Values				
Impedances [4]	R (standard case via mounting screws, ±1%)	232 kΩ		
	R (standard case with -I5 /-I10 option, ±1%)	N/A		
	R (with -M option, ±1%)	232 kΩ	0 Ω	
	R (with -E option, ±1%)	232 kΩ		
	R (with -C option, ±1%)	232 kΩ		
	R (with -M-E option, ±1%)	0 Ω		
	R (with -M-C option, ±1%)	0 Ω		
Capacitance [4]	C (@ 50 VDC ±10%, 1/8 W, max)	0.01 µF	0 µF	

1 For positive polarity models, Vprog varies from 0 to 4.64 VDC. For negative polarity models, Vprog varies inversely from 5 to 0.36 VDC.

2 SIm factor is ±2% @ 100% LOAD, 100% HVout. Valid for 10 to 100% Iout range.

3 SVm factor is ±2% assuming a 10 MΩ measurement impedance. Valid from 10 to 100% HVout.

4 See interface schematics for definition.

5 For details on -I5/-I10 interfacing, see technical note TN-I5-I10-1.

6 For the -I5 interface, Imon, Iprog, Vmon, and Vprog input/output signals vary from 0 to 5 VDC (full-scale).

7 For the -I10 interface, Imon, Iprog, Vmon, and Vprog input/output signals vary from 0 to 10 VDC (full-scale).

8 SVm factor is ±1% for both -I5 and -I10 Interfaces. SVp factor is also ±1% and is valid from 10 to 100% HVout.

9 SIm factor is ±1% for both -I5 and -I10 Interfaces. SIp factor is also ±1% and is valid from 10 to 100% Iout.

STANDARD OPTIONS

The 15A series can be configured with standard options that can adapt its performance and packaging for many application requirements. Customized models to meet specialized performance, packaging, or environmental needs are also available.

Featured Options	
-I5	Upgrades interface to provide more precise control and monitoring of both HVout and Iout using 0 to 5 VDC (full-scale) analog signals. Also adds Iout control and voltage/current mode indication capability not available on the standard interface. Cannot be ordered with the -I10 option.
-I10	Upgrades interface to provide more precise control and monitoring of both HVout and Iout using 0 to 10 VDC (full-scale) analog signals. Also adds Iout control and voltage/current mode indication capability not available on the standard interface. Cannot be ordered with the -I5 option. Available only on models with 24 VDC input.
-F	Reduces high voltage ripple when used together with the Mu-Metal shield and a user-supplied external capacitive load. Available only with the the Mu-Metal shield (-M option).
-M	Adds a Mu-Metal shield to reduce the effects of external RF noise sources. Installed on six sides, this shield option is available on both standard plastic (DAP) and optional aluminum (-C option) cases.
-E	Eared mounting flange that permits the standard plastic (DAP) case to be chassis-mounted.
-C	Aluminum alloy case with integrated mounting flange that provides both added RF and environmental protection.
-WS	Replaces the standard HVout flying lead with a 470 mm long shielded coaxial cable for added RF protection. Terminating connector is user-supplied.
-25PPM	Upgrades module temperature coefficient rating from 50 ppm/°C to 25 ppm/°C for enhanced high voltage output stability over standard operating temperature ranges.
-H	Heatsink option

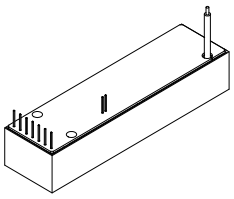

Standard Interface

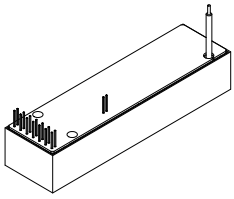

-I5 and -I10 Interface

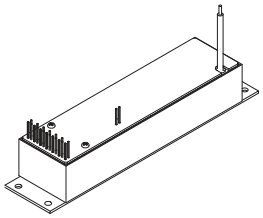

-E Option (Eared Mounting Plate)

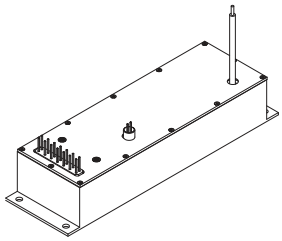

-C Option (Aluminum Case)

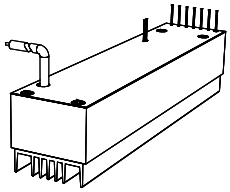

-H Heatsink

ORDERING INFORMATION

		STANDARD CONFIGURATION										OPTIONS									
		Electrical Performance					Standard Features					Interfaces		Ripple		Mechanical				Temp	
												Select One				Select One			Standard		
Standard Part		Number of High Voltage Outputs	High Voltage Output Range (HVout VDC, Adjustable)	Input Voltage (Vin, VDC)	High Voltage Output Polarity	High Voltage Output Power (Pout, Watts)	Standard Interface	Plastic Case (DAP)	Standard HVout Lead (No Connector, 470 mm)	50 ppm/°C Temperature Coefficient	-I5 Interface (0 to 5 VDC Monitors/Controls)	-I10 Interface (0 to 10 VDC Monitors/Controls)	Reduced Ripple Capability	Mu-Metal Shield (6 Sides)	Eared Mounting Flange (Standard Case Only)	Aluminum Case (RF Tight)	Heatsink	Shielded Coaxial HVout Lead (No Connector, 470 mm)	25 ppm/°C Temperature Coefficient	Version
15A	15A12-P4	1	0 to +15,000	12	Pos	4	Included				-I5		-F	-M	-E	-C	-H	-WS	-25PPM	-1
	15A12-N4	1	0 to -15,000	12	Neg	4	Included				-I5		-F	-M	-E	-C	-H	-WS	-25PPM	-1
	15A24-P15	1	0 to +15,000	24	Pos	15	Included				-I5	-I10	-F	-M	-E	-C	-H	-WS	-25PPM	-1
	15A24-N15	1	0 to -15,000	24	Neg	15	Included				-I5	-I10	-F	-M	-E	-C	-H	-WS	-25PPM	-1
	15A24-P30	1	0 to +15,000	24	Pos	30	Included				-I5	-I10	-F	-M	-E	-C	-H	-WS	-25PPM	-1
	15A24-N30	1	0 to -15,000	24	Neg	30	Included				-I5	-I10	-F	-M	-E	-C	-H	-WS	-25PPM	-1

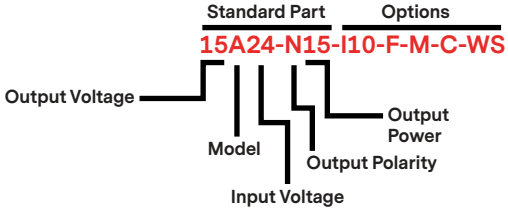

ABOUT ADVANCED ENERGY

Since 1981, UltraVolt® — now part of the Advanced Energy (AE) family — has perfected how power performs for its customers. For both end users and OEMs, AE's comprehensive portfolio of standard and custom high voltage components precisely match system specifications to deliver unparalleled energy, quality, and performance. Through close customer collaboration, design expertise, application insight, and world-class support, AE creates successful partnerships and enables customers to push the boundaries of innovation and stay ahead of evolving market needs.

PRECISION | POWER | PERFORMANCE



CAUTION:
High Voltage

Read and understand all documentation before you install, operate, or maintain Advanced Energy high voltage power supplies. Follow all safety instructions and precautions to protect against property damage and serious or possibly fatal bodily injury. Never defeat safety interlocks or grounds.

Advanced Energy

For international contact information, visit advanced-energy.com.

uv-ca@aei.com
+1.970.221.0108

Specifications are subject to change without notice. Not responsible for errors or omissions. ©2021 Advanced Energy Industries, Inc. All rights reserved. Advanced Energy®, AE®, and UltraVolt® are U.S. trademarks of Advanced Energy Industries, Inc.

ENG-HV-ULTRAVOLT-15A-235-01 9.21