ULTRAVOLT FL SERIES

FLOATING HOT DECK LVPS WITH ISOLATED DIGITAL AND ANALOG I/O

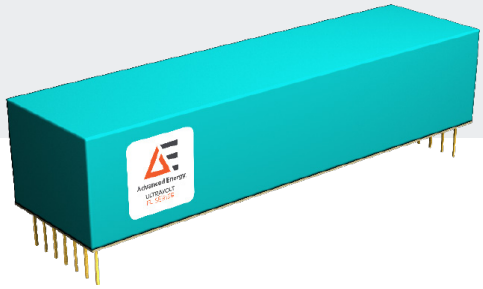

The UltraVolt® FL series of floating-hot-deck, low-voltage power supplies offers an integrated solution for systems requiring LV power & controls with high-voltage isolation. Combining a highly isolated, DC-to-DC, multi-output low-voltage power supply (LVPS) with an advanced isolated digital & analog I/O topology, the FL sub-system provides both power and controls to floating-hot-deck circuitry. This solution, when combined with one or more UV HVPS or other circuitry, can provide high-performance solutions.

PRODUCT HIGHLIGHTS

- Isolated up to 15 kV
- DC leakage current of <10 nA
- AC leakage capacitance of <40 pF
- 3 regulated floating LV power outputs
- Isolated digital and analog I/O to and from floating hot deck
- UL/cUL Recognized Component; CE Mark (LVD & RoHS)

TYPICAL APPLICATIONS

- Floating/stacked ion or e-beam biases
- Floating pulsers and gated grids
- Floating high side current monitors
- Floating filament bias
- Floating capacitance meters
- Floating leakage testers

AT A GLANCE

Nominal Output Voltage

Output #1: +12/+24 VDC
Output #2: -15 VDC
Output #3: +5.6 VDC

Maximum Output Power

12, 24 W

Isolation Voltage

15 kV

Temperature Coefficient

<50 ppm/°C

©2023 Advanced Energy Industries, Inc.

FL SERIES

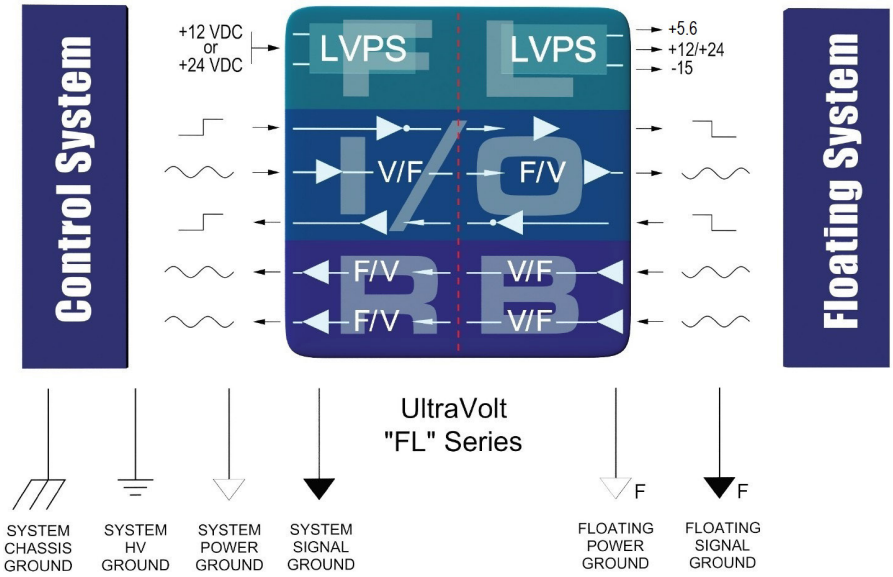
Control System
+12 VDC
or
+24 VDC
LVPS
LVPS
+5.6
+12/+24
-15
V/F
F/V
F/V
V/F
F/V
V/F
Floating System
UltraVolt
"FL" Series
SYSTEM CHASSIS GROUND
SYSTEM HV GROUND
SYSTEM POWER GROUND
SYSTEM SIGNAL GROUND
F
F
FLOATING POWER GROUND
FLOATING SIGNAL GROUND

ELECTRICAL SPECIFICATIONS

Parameter	Conditions	Models		Units
Input		**12 V**	**24 V**	
Voltage Range	Full Power	+12 ±5%	+24 ±10%	VDC
Voltage Range	Derated Power Range	+10.8 to +16	+21.6 to +30	VDC
Current	Standby (Disabled)	<90	<50	mA
Current	No Load	<0.15	<0.15	A
Current	Max Load	<1.6	<1.4	A
AC Ripple Current	Nominal Input, Full Load	<80	<100	mA pk to pk
Local Controls: Reference		**All Types**		
Output Voltage	T = +25°C, Initial Value	+5.1 ±2%		VDC
Output Impedance	T = +25°C	464 ±1%		Ω
Stability	Over Full Temperature Range	0.2		mV/°C
Local Controls: Reference LVPS Enable/Disable		**All Types**		
Power Supply On	Open, or a Voltage Above TTL High	+2.4 to 32		VDC
Power Supply Off	Grounded, or a Voltage Below TTL Low	0 to +0.7 ±0.2 (Isink 1 mA min)		VDC
Input/Output Isolation		**12 V**	**24 V**	
Isolation Voltage	Continuous	15	15	kV
Leakage Current	All Inputs to All Outputs	<10 std, <100 "-E"	< 10 std, < 100 "-E"	nA
Leakage Capacitance	All Inputs to All Outputs	<40 std, <50 "-E"	<50 std or "-E"	pF

Parameter	Conditions	Models		Units
Isolated Power Outputs		**15FL12-12W**	**15FL24-24W**	
Output #1 Power	Nominal Input, Max Iout	12	24	W
Output #1 Voltage	Nominal Input Voltage Range	+12 ±2%	+24 ±2%	VDC
Output #1 Current	Min to Max	0 to 1	0 to 1	A
Output #1 Line Regulation	Nominal Input Range, Full Load	<0.1%	<0.1%	VDC
Output #1 Load Regulation	No Load to Full Load	<0.1%	<0.1%	VDC
Output #1 Ripple	Full Load	<2%	<1%	V pk to pk
Output #2 Voltage	Nominal Input Voltage Range	-15 ±1	-15 ±1	VDC
Output #2 Current	Min to Max	0 to 10	0 to 10	mA
Output #2 Line Regulation	Nominal Input Range, Full Load	<0.1%	<0.1%	VDC
Output #2 Load Regulation	No Load to Full Load	<2%	<2%	VDC
Output #2 Ripple	Full Load	<2%	<2%	VDC
Output #3 Voltage	Nominal Input Voltage Range	+5.6 ±5%	+5.6 ±5%	VDC
Output #3 Current	Min to Max	0 to 10	0 to 10	mA
Output #3 Line Regulation	Nominal Input Range, Full Load	<1%	<1%	VDC
Output #3 Load Regulation	No Load to Full Load	<1%	<1%	VDC
Output #3 Ripple	Full Load	<1%	<1%	V pk to pk

ELECTRICAL SPECIFICATIONS (CONTINUED)

Parameter	Conditions	Models	Units
Isolated Controls: TTL Channel "Up"		**All Types with -I/O Option**	
Local Input	Source Voltage, Sink Current	10 MΩ internal pull up to +15 V	VDC
		<1 V low, >2.5 V high	VDC
Isolated Output	Inverted and Buffered TTL	Open collector with internal 1 kΩ pull up to + 5V (Can sink 10 mA max)	VDC
Bandwidth	Varying Duty Cycle	DC to >300	kHz
Isolated Controls: Analog "Up"		**All Types with -I/O Option**	
Local Input Voltage	Range	0 to +5	VDC
Isolated Output Voltage	Range	0 to +5	VDC
Local Input Impedance		10 Meg	Ω
Isolated Output Impedance		Buffered low impedance	-
Initial Offset Error		< ±1%	mV
Gain Error	Full Scale	< ±2%	VDC
Linearity Error	0 to Full Scale	< ±1%	VDC
Stability	30 Min Warmup, Per 8 h, Per Day	< 0.01% / < 0.02%	VDC
Temperature Coefficient	0 to +55°C	< ±50	ppm/°C
Bandwidth	Symmetric or Asymmetric Signal	DC to 30 (-3dB point is 47 Hz)	Hz
-RB' Isolated Controls: TTL Channel "Down"		**All Types with -I/O-R/B Option**	
Isolated 'Hot Deck' Input	Source Voltage, Sink Current	10 MΩ internal pull up to +15 V	VDC
		<1 V low, >2.5 V high	VDC
Local Output	Inverted and Buffered TTL	Open collector with internal 1 kΩ pull up to +5 V Can sink 10 mA max	VDC
Bandwidth	Varying Duty Cycle	DC to >300	kHz
-RB' Isolated Controls: Analog Channels #1 and #2 "Down"		**All Types with -I/O-R/B Option**	
Isolated 'Hot Deck' +Input	Range	0 to +5, 0 to +10 with >+15 VDC input power	VDC
Isolated 'Hot Deck' -Input	Range	0 to -5, 0 to -10 with >+15 VDC input power	VDC
Isolated 'Hot Deck' + or -Input impedance	Signal Source	>10	MΩ
Local Output +Voltage	Range	0 to +5, 0 to +10 with >+15 VDC input power	VDC
Local Output -Voltage	Range	0 to –5, 0 to -10 with >+15 VDC input power	VDC
Local Output Impedance	Signal Source	Buffered low impedance	Ω
Initial Offset Error	Signal Source	< ± 5	mVDC
Gain Error	Full Scale	< ±1%	VDC
Linearity Error	O to Full Scale	< ±1%	VDC
Stability	30 Min Warmup, Per 8 h, Per Day	< 0.01%/< 0.02%	VDC
Temperature Coefficient	-20 to +55°C	< ±50	ppm/°C
Bandwidth	Symmetric or Asymmetric Signal	DC to 30 (-3dB point is 47 Hz)	Hz

ELECTRICAL SPECIFICATIONS (CONTINUED)

Parameter	Conditions	Models		Units
Environmental		**All Types**		
Operating Temperature	Full Load, Case Measurement	-20 to +55°C		
Storage Temperature	Non-operating, Case Measurement	-55 to +85°C		
Thermal Shock Temperature	Mil-Std-810, Method 503-4, Proc. II	-20 to +55°C		
Operating Altitude	All Operating Conditions	Sea level to vacuum		
Storage Altitude	Non-operating	Sea level to vacuum		
Shock and Vibration		**Standard**	**-RB Option**	
Shock	Mil-Std-810, Method 516.5, Proc. IV 2	20 Gs	20 Gs	
Vibration	Mil-Std-810, Method 514.5, Fig.	10 Gs	10 Gs	

MECHANICAL SPECIFICATIONS

Construction	
Case	Epoxy-filled DAP box certified to ASTM-D-5948
Volume	Standard: 163.9 cc (10.3 in³)
	-R/B Option: 182 cc (11.1 in³)
Weight	Standard: 340.2 g (12.0 oz)
	-R/B Option: 377.1 g (13.3 oz)
Tolerance	Overall ±0.050" (1.27 mm)
	Pin to Pin ±0.015" (0.38 mm)
	Mounting hole locations ±0.025" (0.64 mm)

Note: 24-watt versions are an additional 0.062" (1.57 mm) in height.
-M equipped units are an additional 0.030" (0.76 mm) in height.
Contact Advanced Energy for drawings of models equipped with -E options.

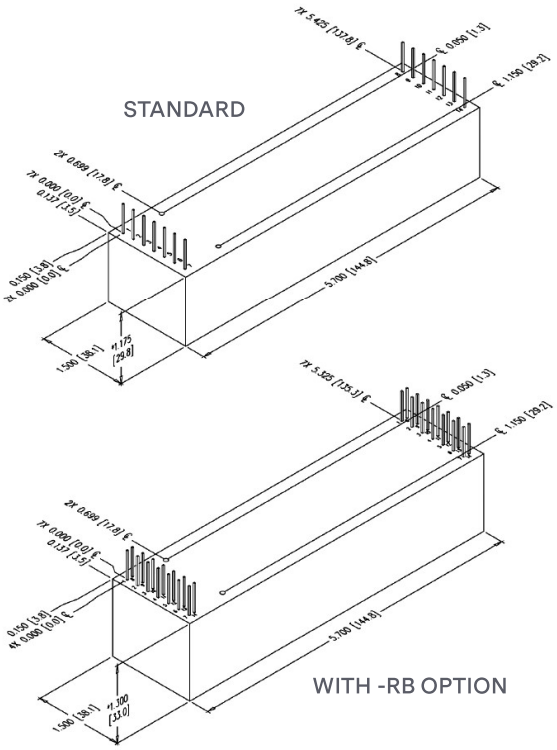

INTERFACE

Local Connections	
Pin	**Function**
1	Input Power Ground Return
2	Positive Power Input
3	LVPS Enable/Disable
4	TTL Up HVPS Enable/Disable (-I/O Only)
5	Signal Ground Return
6	Analog Up/ HVPS Remote Programming Input (-I/O Only)
7	+5 V Reference Output

Isolated / Floating Connections	
Pin	**Function**
8	Floating Power Ground Return
9	Floating +12 VDC or +24 VDC Output
10	Floating -15 VCD Output
11	Floating TTL Up/HVPS Enable/Disable (-I/O Only)
12	Floating Signal Ground Return
13	Floating Analog Up/HVPS Remote Programming Input (-I/O Only)
14	Floating +5.6 VDC Reference Output

Additional Local Connections (-R/B Option)	
Pin	**Function**
8	+Iout Monitor Output (Analog Down Channel 1)
9	-Iout Monitor Output (Analog Down Channel 1)
10	+Eout Monitor Output (Analog Down Channel 2)
11	-Eout Monitor Output (Analog Down Channel 2)
12	N/C
13	N/C
14	TTL Output (Digital Down Channel 1)

Additional Isolated/Floating Connections (-R/B Only)	
Pin	**Function**
1	Floating +Iout Monitor Output (Analog Down Channel 1)
2	Floating -Iout Monitor Output (Analog Down Channel 1)
3	Floating +Eout Monitor Output (Analog Down Channel 2)
4	Floating -Eout Monitor input (Analog Down Channel 2)
5	N/C
6	N/C
7	Floating TTL Input (Digital Down Channel 1)

ORDERING INFORMATION

Type	15 kV Isolation	15FL
Input Voltage	12 VDC Nominal	12
	24 VDC Nominal	24
Power	Watts Output (12 Vin Only)	-12W
	Watts Output (24 Vin Only)	-24W
Options	(1) Digital Up Channel and (2) Analog Up Channels	-I/O
	(1) Digital Down Channel and (2) Analog Down Channels	-R/B
	Partial Mu-Metal Shield	-M
Case	Plastic Case—Diallyl Phthalate	Standard
	"Eared" Chassis Mounting Plate (15 kV only)	-E

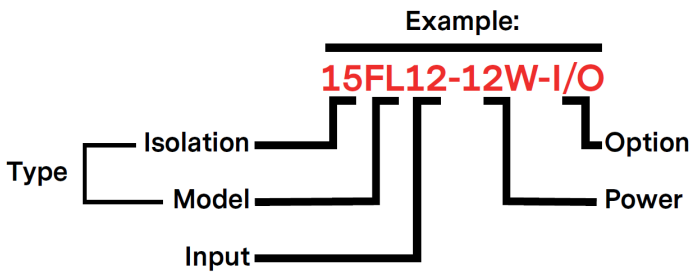

ABOUT ADVANCED ENERGY

Since 1981, Advanced Energy (AE) — and its UltraVolt® family of products — has perfected how power performs for its customers. For both end users and OEMs, AE's comprehensive portfolio of standard and custom high-voltage components precisely match system specifications to deliver unparalleled energy, quality, and performance. Through close customer collaboration, design expertise, application insight, and world-class support, AE creates successful partnerships and enables customers to push the boundaries of innovation and stay ahead of evolving market needs.

PRECISION | POWER | PERFORMANCE | TRUST



CAUTION:
High Voltage

Read and understand all documentation before you install, operate, or maintain Advanced Energy high voltage power supplies. Follow all safety instructions and precautions to protect against property damage and serious or possibly fatal bodily injury. Never defeat safety interlocks or grounds.

Advanced Energy

For international contact information,
visit advancedenergy.com.

powersales@aei.com (Sales Support)
productsupport.ep@aei.com (Technical Support)
+1 888 412 7832

Specifications are subject to change without notice. Not responsible for errors or omissions. ©2019 Advanced Energy Industries, Inc. All rights reserved. Advanced Energy®, AE®, and Ultravolt® are U.S. trademarks of Advanced Energy Industries, Inc.

ENG-High-Power-FL Series-235-01 06.16.2023