ULTRAVOLT 10HVA – 20HVA SERIES

PRECISION HIGH VOLTAGE AMPLIFIER



The UltraVolt® 10HVA – 20HVA series of DC-to-DC high voltage power supplies operates a precision filter / divider and linear HV switch to produce a high voltage amplifier (HVA). These modules provide a high-resolution, high voltage DC to full scale waveform capability greater than 500 Hz output. 10 / 15 / 20 kV HVA modules are optimized for bias applications while providing excellent line regulation, load regulation, dynamic response, and stability. The HVA series can both source and sink current operating linearly through 0 V with low ripple and noise over the entire output range.

PRODUCT HIGHLIGHTS

- Bipolar models available at 0 to 10 kV, 15 kV, 20 kV
- Unipolar models available at 0 to 15 kV and 20 kV
- Operates in DC, reversible, and amplifier modes
- Fast slew rate and high bandwidth at an excellent value
- Can both source and sink current
- PPM level line & load regulation
- 50 ppm temperature coefficient (25 ppm optional)
- Reduced ripple option available
- Differential precision 0 to 10 VDC control input
- Precision voltage and current monitors

TYPICAL APPLICATIONS

- Drivers
  - Electrohydrodynamics
  - Electrostatic chuck
  - Pockels cells
  - Laser and electro-optic modulation
  - Electrophoresis
- Amplifiers
  - Ion beam and electron beam devices such as mass spectrometry, and electron microscopes as well as electrostatic deflection/focusing, flocking, coating, electrospinning, precipitation and electrocoalescence

©2023 Advanced Energy Industries, Inc.

ELECTRICAL SPECIFICATIONS

Parameter	Conditions	Models					Units
Input		**All Types**					
Voltage Range	Full Power	24 VDC ± 10%					VDC
Current	Standby / Disable	<70 unipolar, <105 bipolar					mA
Current	Full Load, Max Eout	750	Bipolar-1 W=850/1.5 W=900 Unipolar-1 W=650/1.5 W=700		Bipolar-1 W=950/2 W=1025 Unipolar-1 W=750/2 W=825		mA
Current	No Load, Max Eout	675	Bipolar-1 W=775/1.5 W=825 Unipolar-1 W=575/1.5 W=625		Bipolar-1 W=875/2 W=950 Unipolar-1 W=675/2 W=750		mA
Output[1]		**±10 kV**	**15 kV/±15 kV**		**20 kV/±20 kV**		
Power	Nominal Input, Max Eout	1	1	1.5	1	2	W
Current	Iout Entire Voltage Range	100	66	100	50	100	uA
Ripple	Full Load, Max Eout	0.05	0.05	0.05	0.05	0.05	%V pp
Ripple with -F Option	Full Load, Max Eout	0.0125	0.0125	0.0125	0.0125	0.0125	%V pp
Voltage Monitor	Normal Operating Conditions	0 to 10 ± 0.5%					VDC
Current Monitor	Normal Operating Conditions	0 to 10 ± 1%					VDC
Line Regulation	Vin Min to Vin Max, Max Eout	<0.01					%
Load Regulation	No Load to Full Load, Max Eout	<0.01					%
Programming and Controls		**All Types**					
Input Impedance	Normal Operating Conditions	10					MΩ
Adjust Voltage	Differential	0 to +10					VDC
HV ON/OFF (Enable/Disable)		0 to +0.8 V Disable, +2.5 to +10 Enable (Default = Disable)					VDC
Reference Voltage		+10.00 ± 0.05%					VDC
Max Source Current		5					mA
Environmental		**All Types**					
Operating	Full Load, Max Eout, Case Temp.	+10 to +45					°C
Temperature Coefficient	Over the Specified Temperature	±50 ppm or ±25 ppm (Optional)					ppm/°C
Storage	Non-Operating, Case Temp.	-40 to +100					°C
Humidity	All Conditions, Standard Package	0 to 95% non-condensing					-
Altitude	Standard Package, All Conditions	Sea Level through 10,000					ft
Shock	Mil-Std-810, Method 516, Proc. 4	20					Gs
Vibration	Mil-Std-810, Method 514, Fig. 514-3	10					Gs

1 Units listed without polarity can be ordered as positive (+) or negative (-). Units listed as (±) are bipolar.

MECHANICAL SPECIFICATIONS

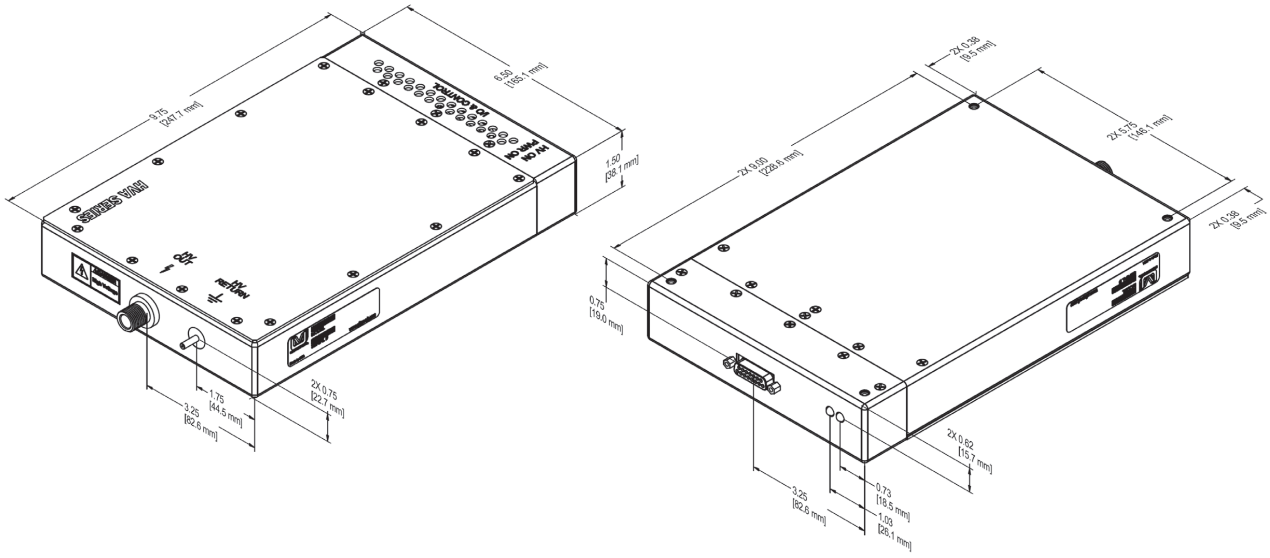

Construction	
Standard Case	Aluminum (Anodized per MIL-A-8625 Type II)
Finish	Blue Anodized
Size	95.06 in^3 (1557.8 cm^3)
Tolerance	Overall: ±0.030 in (1.27 mm)
	Mounting Hole Location: ±0.025 in (0.64 mm)
Encapsulation	Silicone-based RTV (contact factory for other options)
Weight	2.54 kg, 5.6lb

INTERFACE

Connections	
D-Sub	15-Pin, Female
HV Connector	LGH1Li
HV Return	#6-32 x 0.437 Long

1 Requires mating cable CA-25KV-1000 to operate. (Sold Separately)

HVA Input Connector Pinout Functinos		
Pin	**Description**	**Function**
1	Reference Voltage	+10.00 V precision reference
2	Voltage Programming -	0 to +10 V or 0 to -10 V to program full output voltage, depending on polarity. Programming input is differential between pins 2 and 3.
3	Voltage Programming +	
4	Voltage Monitor	0 to ±10 V represents 0 to ± full output voltage
5	N/C	No connection
6	Signal Ground	Reference all control signals here
7	Input Power	+24 V Input Power
8	Input Power	
9	Power Ground	Input power return
10	Power Ground	
11	Enable	TTL high to enable, low to disable, default is OFF
12	Current Monitor	0 to ±10 V represents 0 to ± full output current
13	Current Limit Adjust	0 to +10 V sets current limit from 0 to full rated output current
14	N/C	No connection
15	Signal Ground	Reference all control signals here

ORDERING INFORMATION

Type	0 to 10,000 VDC Output	10HVA
	0 to 15,000 VDC Output	15HVA
	0 to 20,000 VDC Output	20HVA
Input	24 VDC Nominal	24
Polarity	Positive Output	-P
	Negative Output	-N
	Bipolar Output	-BP
Power	1 Watt Output	1
	1.5 Watt Output @ 15kV Only	1.5
	2 Watt Output @ 20kV Only	2
Option	Ripple Stripper® Output Filter	-F
	25 ppm temperature coefficient	-25PPM
Connections	LGH1Li	Standard
	Shielded Flying Lead for HV Output	WS

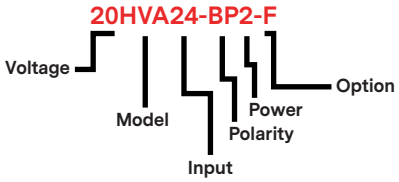

ABOUT ADVANCED ENERGY

Since 1981, UltraVolt® — now part of the Advanced Energy (AE) family — has perfected how power performs for its customers. For both end users and OEMs, AE's comprehensive portfolio of standard and custom high voltage components precisely match system specifications to deliver unparalleled energy, quality, and performance. Through close customer collaboration, design expertise, application insight, and world-class support, AE creates successful partnerships and enables customers to push the boundaries of innovation and stay ahead of evolving market needs.

PRECISION | POWER | PERFORMANCE



CAUTION:
High Voltage

Read and understand all documentation before you install, operate, or maintain Advanced Energy high voltage power supplies. Follow all safety instructions and precautions to protect against property damage and serious or possibly fatal bodily injury. Never defeat safety interlocks or grounds.

Advanced Energy

For international contact information, visit advanced-energy.com.

uv-ca@aei.com
+1.970.221.0108

Specifications are subject to change without notice. Not responsible for errors or omissions. ©2023 Advanced Energy Industries, Inc. All rights reserved. Advanced Energy®, AE®, and UltraVolt® are U.S. trademarks of Advanced Energy Industries, Inc.

RoHS

ENG-HV-HVA10-20series-235-02 4.07.23