10A-25A SERIES

10kV to 25kV High Voltage Biasing Supplies



The 10A-25A Series of regulated, high-voltage DC-DC converters are an extension of the A Series, directly addressing the needs of the miniature PCB or chassis-mount ≥10kV application. Designed and built utilizing state-of-the-art power conversion topology, these units feature surface-mount technology and encapsulation techniques providing high reliability and low cost. Typical applications for the 10A-25A Series include the following: electrophoresis, mass spectroscopy, electron microscopes, plasma and cathode ray tubes (CRT).

- 0 to 10kV, 15kV, 20kV, or 25kV output
- 4, 15 or 30 watts of output power
- Maximum Iout capability down to 0 Volts
- Wide input voltage range
- Indefinite output short-circuit protection
- Output current & voltage monitors
- Fixed-frequency, low-stored-energy design
- >450,000 hour MTBF @65°C
- UL/cUL Recognized Component; CE Mark (LVD & RoHS)

PARAMETER	CONDITIONS	MODELS												UNITS
INPUT		12V						24V						
Voltage Range	Full Power	+ 11 to 16						+ 23 to 30						VDC
Voltage Range	Derated Power Range	+ 9 to 32						+ 9 to 32						VDC
Current	Standby / Disable	< 30						< 30						mA
Current	No Load, Max Eout	10A < 0.20, 15A/20A/25A < 0.25						10A < 0.17, 15A < 0.20, 20A < 0.21, 25A < 0.25						A
Current	Max Load, Max Eout	~ 500						~ 1600						mA
AC Ripple Current	Nominal Input, Full Load	< 80						< 80						mA p-p
OUTPUT		10A			15A			20A			25A			
Voltage Range	Nominal Input	0 to 10,000			0 to 15,000			0 to 20,000			0 to 25,000			VDC
Nominal Input Voltage		12	24	24	12	24	24	12	24	24	12	24	24	VDC
Power	Nominal Input, Max Eout	4	15	30	4	15	30	4	15	30	4	15	30	Watts
Current	Iout Entire Output Voltage Range	0.40	1.5	3.0	0.26	1.0	2.0	0.20	0.75	1.5	0.16	0.60	1.2	mA
Current Scale Factor	Full Load	0.167	0.184	0.381	0.158	0.181	0.378	0.152	0.178	0.184	0.145	0.175	0.183	mA/V
Voltage Monitor Scaling		1000:1 ± 2% into 10MΩ												-
Ripple	Full Load, Max Eout, 300pF bypass Cap.	0.012	0.039	0.076	0.024	0.043	0.080	0.020	0.031	0.080	0.020	0.080	0.051	%V p-p
Ripple with -F-M Option	Full Load, Max Eout, 300pF bypass Cap.	0.008	0.034	0.072	0.021	0.028	0.073	0.010	0.018	0.039	0.010	0.040	0.040	%V p-p
Dynamic Load Regulation	½ to Full Load, Max Eout per 0.1mA	<5.0	<5.0	<5.0	<7.5	<7.5	<7.5	<10.0	<10.0	<10.0	<10.0	<10.0	<10.0	V pk
Line Regulation	Nom. Input, Max Eout, Full Power	< 0.01 %												VDC
Static Load Regulation	No Load to Full Load, Max Eout	< 0.01%												VDC
Stability	30 Min. warmup, per 8 hr/ per day	< 0.01% / < 0.02%												VDC
PROGRAMMING & CONTROLS		ALL TYPES												
Input Impedance	Nominal Input	+ Output Models 1.1MΩ to GND, - Output Models 1.1MΩ to +5 Vref												MΩ
Adjust Resistance	Typical Potentiometer Values	10K to 100K (Pot across Vref. & Signal GND, Wiper to Adjust)												Ω
Adjust Logic	0 to +5 for +Out, +5 to 0 for - Out	+4.64 VDC for +Output or +0.36 for -Output = Nominal Eout												-
Output Voltage & Impedance	T=+25°C	+ 5.00VDC ± 2%, Zout = 464Ω ± 1%												-
Enable/Disable		0 to +0.5 Disable, +2.4 to 32 Enable (Default = Enable)												VDC
ENVIRONMENTAL		STANDARD						-25PPM						
Operating	Full Load, Max Eout, Case Temp.	-40 to +65						+10 to +45						°C
Coefficient	Over the Specified Temperature	± 50						± 25						PPM/°C
Thermal Shock	Mil-Std 810, Method 503-4, Proc. II	-40 to +65												°C
Storage	Non-Operating, Case Temp.	-55 to +105												°C
Humidity	All Conditions, Standard Package	0 to 95% non-condensing												-
Altitude	Standard Package, All Conditions	Sea Level through Vacuum (Vacuum may require -P2 option, contact factory for details.)												-
Shock	Mil-Std-810, Method 516.5, Proc. IV	20 (Standard), 40 (-C Option)												G's
Vibration	Mil-Std-810, Method 514.5, Fig.514.5C-3	10 (Standard), 20 (-C Option)												G's

Specifications subject to change without notice.

©2011, UltraVolt Inc. All rights reserved.

10A-25A SERIES

10kV to 25kV High Voltage Biasing Supplies

10A SERIES STANDARD CASE

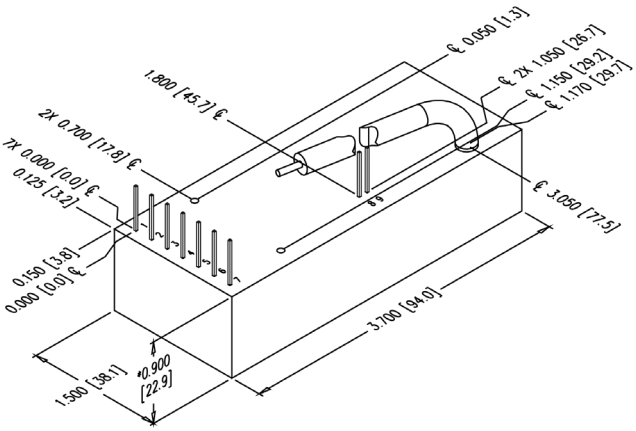

15A SERIES STANDARD CASE

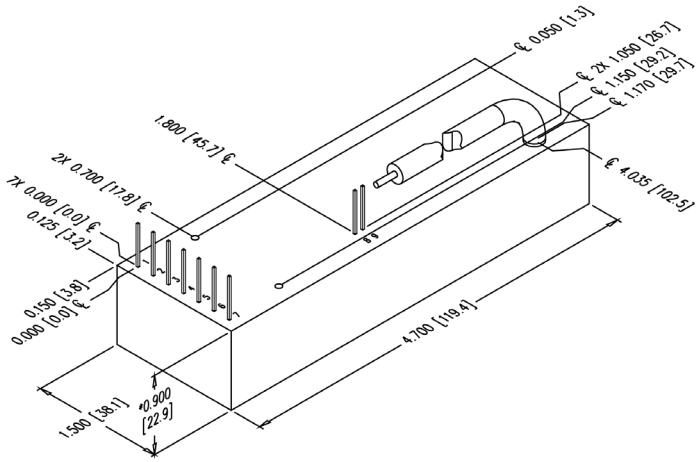

20A SERIES STANDARD CASE

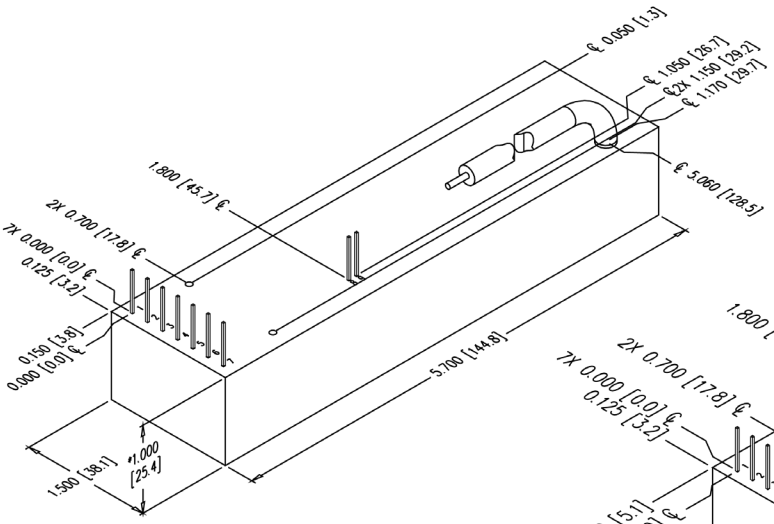

25A SERIES STANDARD CASE

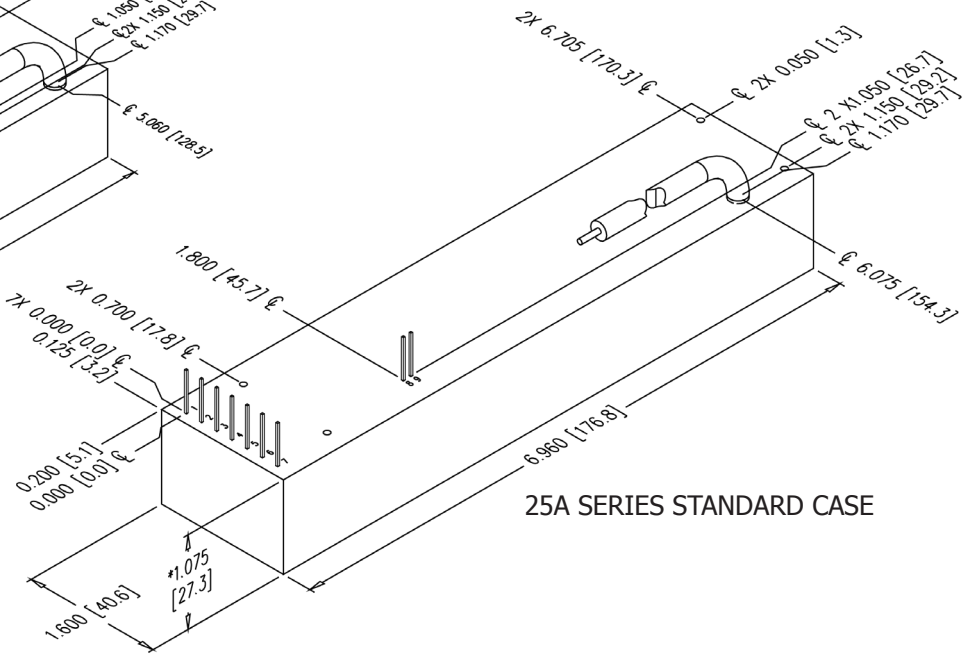

CONSTRUCTION

Epoxy-filled DAP box certified to ASTM-D-5948 with -C Option:
Aluminum Alloy 5052-H32, Finish: MIL-A-8625 Type II (Anodizing)

SIZE

Volume:
10A: 4.90 in³ (80.31cc), w/-C Option 8.80 in³ (144.23cc)
15A: 6.35 in³ (104.08cc), w/-C Option 11.00 in³ (180.29cc)
20A: 8.55 in³ (140.13cc), w/-C Option 14.40 in³ (236.02cc)
25A: 11.70 in³ (191.76cc), w/-C Option 20.00 in³ (327.80cc)
Weight:
10A: 6.00 oz (170.10g), w/-C Option 11.50 oz (326.02g)
15A: 8.00 oz (226.80g), w/-C Option 14.00 oz (396.89g)
20A: 11.00 oz (311.84g), w/-C Option 19.00 oz (538.64g)
25A: 15.00 oz (452.24g), w/-C Option 22.00 oz (623.69g)

TOLERANCE

Overall ±0.050" (1.27)
Pin to Pin ±0.015" (0.38)
Mounting hole locations ±0.025" (0.64)

NOTES

Standard case length, width, and height specs are ±0.050" (1.27)
-C Option case length, width and height specs are ±0.025" (0.635)
15W and 30W versions are an additional 0.070" (1.78) in height.
-M equipped units are an additional 0.030" (0.76) for each dimension.
Contact UV Customer Service for drawings of models equipped with -E , -C, or -H options.

Downloadable drawings (complete with mounting & pin information) and 3D models are available online.

10A-25A SERIES

10kV to 25kV High Voltage Biasing Supplies

CONNECTIONS	
PIN	FUNCTION
1	Input-Power Ground Return
2	Positive Power Input
3	Iout Monitor
4	Enable/Disable
5	Signal Ground Return
6	Remote Adjust Input
7	+5VDC Reference Output
8	HV Ground Return
9	Eout Monitor

All grounds joined internally. Power-supply mounting points isolated from internal grounds by >100kΩ, .01uF / 50V (Max) on all models except -M (15W and above), -M-E, -M-C, and -M-H configurations which are 0Ω.

ORDERING INFORMATION		
Type	0 to 10,000 VDC Output	10A
	0 to 15,000 VDC Output	15A
	0 to 20,000 VDC Output	20A
	0 to 25,000 VDC Output	25A
Input	12VDC Nominal (4W only)	12
	24VDC Nominal (15W and 30W only)	24
Polarity	Positive Output	-P
	Negative Output	-N
Power	Watts Output (12Vin Only)	4
	Watts Output (24Vin Only)	15
	Watts Output (24Vin Only)	30
Case	Plastic Case - Diallyl Phthalate	(Standard)
	'Eared' Chassis Mounting Plate (Plastic Case)	-E
	RF-Tight Aluminum Enclosure	-C
Heat Sink	.400" High (sized to fit case)	-H
Shield	Six-sided Mu-Metal Shield	-M
Ripple Stripper®	Integral Output Filter (See -F Option Datasheet) and Mu-Metal	-F-M
Options	Shielded Flying Lead for HV Output	-WS
Lead Options	Protected Flying Lead	-AP
	Terminated Flying Lead (Contact Customer Service)	-ATxx
Temp. Coefficient	25PPM Temperature Coefficient	-25PPM
Enhanced Interface (10A models only)	5V Control and Monitors	-I5
	10V Control and Monitors	-I10

CE cULus IEC-60950-1

RoHS COMPLIANT Non-RoHS compliant units are available. Please contact the factory for more information.

Manufactured in USA

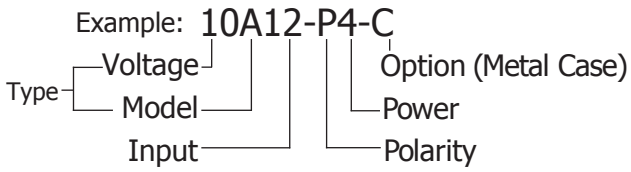

Popular accessories ordered with this product include CONN-KIT, BR-2, BR-3, and BR-5 mounting bracket kits, and our full range of high voltage output connectors (see Accessories & Connectors datasheet).

Rev. AC 10/14

1800 Ocean Avenue, Ronkonkoma, NY 11779
Phone: 1-631-471-4444 Fax: 1-631-471-4696 www.ultravolt.com