ULTRAVOLT C SERIES

HIGH VOLTAGE CAP-CHARGING SUPPLIES

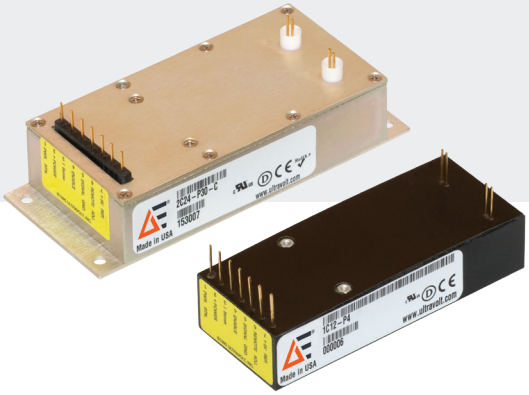

The UltraVolt® C series of high voltage regulated DC-to-DC converters are designed for fast rise time/charging applications utilizing state-of-the-art power conversion topology. This high power density module is especially suited to high-energy pulsers, amplifiers, and discharge devices with large capacitance, fast repetition rates, or high current loads. Surface-mount technology and encapsulation techniques provide high reliability and low cost.

PRODUCT HIGHLIGHTS

- 7 models from 0 to 125 V through 0 to 6 kV
- 20 or 30 W output power
- Maximum Iout capability down to 0 V
- Maximum Iout during charge/rise time
- Indefinite output short circuit protection
- Very fast rise with very low overshoot
- Output voltage and current monitors
- > 400,000 h MTBF at 65°C
- Fixed-frequency, low-stored-energy design
- UL/cUL recognized component; CE Mark (LVD and RoHS)

TYPICAL APPLICATIONS

- Cap-charging
- Pulsed power
- Test equipment
- Mass spectrometry
- Automated test equipment (ATE)
- Lasers and electro-optics
- HV pulse generator bias
- HV amplifier bias

©2018 Advanced Energy Industries, Inc.

ELECTRICAL SPECIFICATIONS

Parameter	Conditions	Models						Units
Input		**All Types**						
Voltage Range	Full Power	+23 to 30						VDC
Voltage Range	Derated Power Range	+9 to 32						VDC
Current	Standby/Disable	< 30						mA
Current	No Load, Max Eout	< 90						mA
Current	Max Load, Max Eout	20 W: 950, 30 W: 1425						mA
AC Ripple Current	Nominal Input, Full Load	< 80						mA pk to pk
Output		**1/8C**		**1/4C**		**1/2C**		
Voltage Range	Nominal Input	0 to 125		0 to 250		0 to 500		VDC
Power	Nominal Input, Max Eout	20	30	20	30	20	30	W
Current	Iout, Entire Output Voltage Range	160	240	80	120	40	60	mA
Current Scale Factor	Full Load	2540	4210	1096	2000	1142	1667	mA/V
Voltage Monitor Scaling		100:1 ±2% into 10 MΩ						
Ripple	Full Load, Max Eout, Cload ≥ 0.5 uF	< 1.0	< 1.0	< 1.0	< 1.0	< 1.0	< 1.0	V pk to pk
Overshoot	C Load, 0 Eout to Full Eout	< 1.0	< 1.0	< 1.0	< 1.0	< 2.0	< 2.0	V pk
Rise Time	Max Iout, Various C Loads and Eout	Figure A						-
Storage Capacitance	Internal	0.50	0.50	0.15	0.15	0.16	0.16	uF
Line Regulation	Nominal Input, Max Eout, Full Power	< 0.01 %						VDC
Static Load Regulation	No Load to Full Load, Max Eout	< 0.01%						VDC
Stability	30 Min Warmup, Per 8 h, Per Day	< 0.01%/< 0.02%						VDC

Output		1C		2C		4C		6C		
Voltage Range	Nominal Input	0 to 1000		0 to 2000		0 to 4000		0 to 6000		VDC
Power	Nominal Input, Max Eout	20	30	20	30	20	30	20	30	W
Current	Iout, Entire Output Voltage Range	20	30	10	15	5	7.5	3.3	5	mA
Current Scale Factor	Full Load	307	476	159	259	94	112	51	86	mA/V
Voltage Monitor Scaling		100:1 ±2% into 10 MΩ								
Ripple	Full Load, Max Eout, Cload ≥ 0.5 uF	< 1.0	< 1.0	< 1.0	< 1.0	< 1.0	< 1.0	< 1.0	< 1.0	V pk to pk
Overshoot	C Load, 0 Eout to Full Eout	< 1.0	< 1.0	< 1.0	< 1.0	< 4.0	<4.0	< 6.0	<6.0	V pk
Rise Time	Max Iout, Various C Loads and Eout	Figure A								-
Storage Capacitance	Internal	0.033	0.018	0.0019	0.009	0.010	0.010	0.0064	0.0064	uF
Line Regulation	Nominal Input, Max Eout, Full Power	< 0.01 %								VDC
Static Load Regulation	No Load to Full Load, Max Eout	< 0.01%								VDC
Stability	30 Min Warmup, Per 8 h, Per Day	< 0.01%/< 0.02%								VDC

C = uF
V = Volts
I = mA
T = mS

$$T = \frac{C \times V}{I}$$

C = uF
V = kV
I = mA
F = Hz

$$I = C \times V \times F$$

C = uF
V = kV
I = mA
F = Hz

$$F = \frac{I}{CxV}$$

C = uF
E^2 = kV
J = Ws

$$J = \frac{C \times E^2}{2}$$

Figure A - Rise time formulas

Note: Capacitance must include HVPS internal capacitance.

ELECTRICAL SPECIFICATIONS (CONTINUED)

Programming And Controls		All Types	Units
Input Impedance	Nominal Input	+Output models 1.1 MΩ to ground, -output models 1.1 MΩ to +5 vRef.	MΩ
Adjust Resistance	Typical Potentiometer Values	10 to 100 K (potentiometer across vRef. and signal ground, wiper to adjust)	Ω
Adjust Logic	0 to +5 for +Out, +5 to 0 for -Out	+4.64 VDC for +output or +0.36 for -output = nominal Eout	-
Output Voltage and Impedance	T = +25°C	+5.00 VDC ±2%, Zout = 464 Ω ±1%	-
Enable/Disable		0 to +0.5 disable, +2.4 to 32 enable (default = enable)	VDC

Environmental		Standard	-25 PPM Option	Units
Operating	Full Load, Max Eout, Case Temp.	-40 to +65	+10 to +45	°C
Coefficient	Over The Specified Temperature	±50	±25	PPM/°C
Thermal Shock	Mil-Std 810, Method 503-4, Proc. II	-40 to +65		°C
Storage	Non-operating, Case Temp.	-55 to +105		°C
Humidity	All Conditions, Standard Package	0 to 95% non-condensing		-
Altitude	All Conditions, Standard Package	Sea level through vacuum (vacuum may require -P2 option, contact factory for details)		-
Shock	Mil-Std-810, Method 516.5, Proc. IV	20 (standard), 40 (-C option)		Gs
Vibration	Mil-Std-810, Method 514.5, Fig.514.5C-3	10 (standard), 20 (-C option)		Gs

MECHANICAL SPECIFICATIONS

Physical Specifications	
Construction	Epoxy-filled DAP box certified to ASTM-D-5948 with -C option, aluminum box, chem film per MIL-A-8625 Type II (anodizing)
Volume	70.5 cc (4.30 in^3), with -C option: 131.1 cc (8.00 in^3)
Weight	142 g (5.0 oz), with -C Option: 284 g (10.0 oz)
Tolerance	Overall 1.27 mm (±0.050"), pin to pin 0.38 mm (±0.015"), mounting hole location 0.64 (±0.025") (plastic case)
	Overall 0.64 mm (±0.025"), pin to pin 0.38 mm (±0.015"), hole to hole location 0.64 mm (±0.025") (metal case)

20 and 30 W versions are an additional 157 mm (0.062") in height.

-M equipped units are an additional 0.76 mm (0.030") for each dimension.

Contact Advanced Energy for drawings of models equipped with -E or -H options.

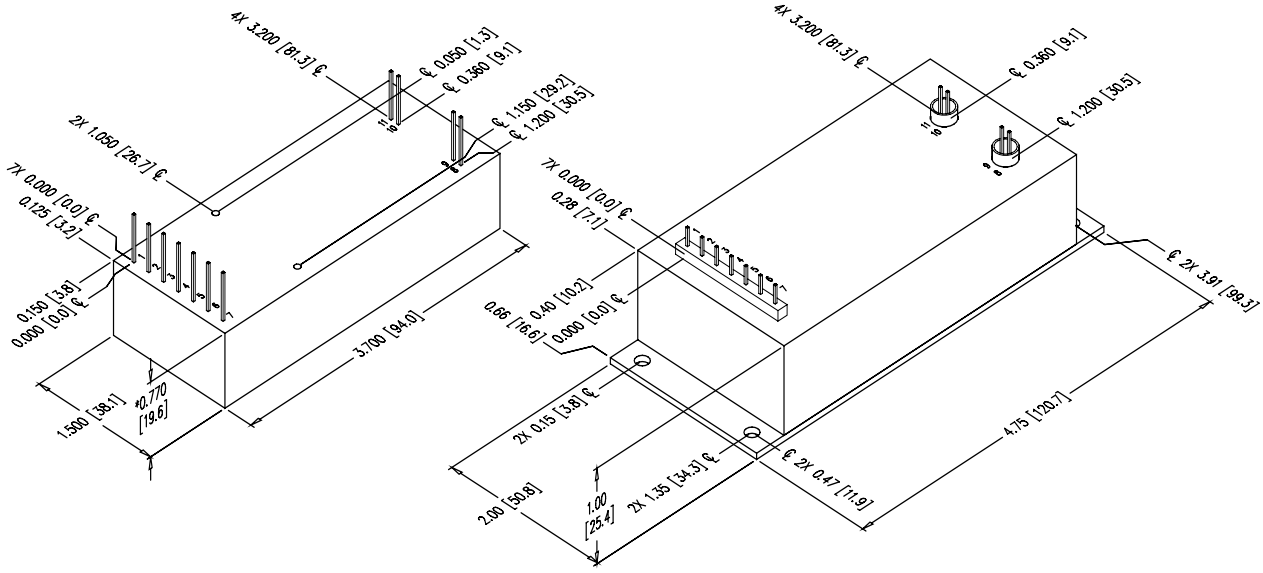

INTERFACE

Connections	
Pin	**Function**
1	Input Power Ground Return
2	Positive Power Input
3	Iout Monitor
4	Enable/Disable
5	Signal Ground Return
6	Remote Adjust Input
7	+5 VDC Reference Output
8	HV Ground Return
9	Eout Monitor
10 and 11	HV Output

All grounds joined internally. Power supply mounting points isolated from internal grounds by > 100 kΩ, 0.01 uF/50 V (max) on all models except -M, -M-C, -M-E, and -M-H configurations which are 0 Ω.

ORDERING INFORMATION

Type	0 to 125 VDC Main Output	1/8C
	0 to 250 VDC Main Output	1/4C
	0 to 500 VDC Main Output	1/2C
	0 to 1,000 VDC Main Output	1C
	0 to 2000 VDC Main Output	2C
	0 to 4000 VDC Main Output	4C
	0 to 6000 VDC Main Output	6C
Input	24 VDC Nominal (20 and 30 W)	24
Polarity	Positive Output	-P
	Negative Output	-N
Power	W Output	20
	W Output	30
Case	Plastic Case - Diallyl Phthalate	(Standard)
	'Eared' Heatsink Plate (Plastic Case)	-E
	RF-Tight Aluminum Case	-C
Heatsink	0.400" High (Sized-to-Fit Case)	-H
Shield	Six-sided Mu-Metal Shield	-M
Temp. Coefficient	25 PPM Temperature Coefficient	-25 PPM

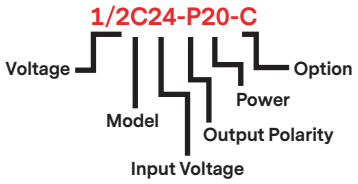

Popular accessories ordered with this product include CONN-KIT and BR-1 mounting bracket kit.

ABOUT ADVANCED ENERGY

Since 1981, UltraVolt® — now part of the Advanced Energy (AE) family — has perfected how power performs for its customers. For both end users and OEMs, AE's comprehensive portfolio of standard and custom high voltage components precisely match system specifications to deliver unparalleled energy, quality, and performance. Through close customer collaboration, design expertise, application insight, and world-class support, AE creates successful partnerships and enables customers to push the boundaries of innovation and stay ahead of evolving market needs.

PRECISION | POWER | PERFORMANCE



CAUTION:
High Voltage

Read and understand all documentation before you install, operate, or maintain Advanced Energy high voltage power supplies. Follow all safety instructions and precautions to protect against property damage and serious or possibly fatal bodily injury. Never defeat safety interlocks or grounds.

Advanced Energy

For international contact information, visit advanced-energy.com.

uv-ca@aei.com
+1.970.221.0108

Specifications are subject to change without notice. Not responsible for errors or omissions. ©2018 Advanced Energy Industries, Inc. All rights reserved. Advanced Energy®, AE®, and UltraVolt® are U.S. trademarks of Advanced Energy Industries, Inc.

ENG-HV-CSeries-231-B 6.18