ULTRAVOLT 30A - 40A SERIES

30KV TO 40KV HIGH VOLTAGE BIASING SUPPLIES



The 30A - 40A series of regulated, high voltage DC-DC converts are an extension of the A series, directly addressing the needs of the miniature PCB of chassis-mount ≥ 30 kV application. Designed and built utilizing stage-of-the -art power conversion topology, these units feature surface-mount technology and encapsulation techniques providing high reliability and low cost.

PRODUCT HIGHLIGHTS

- Regulated 0 to 30 kV, 35 kV or 40kV DC high voltage output
- Single output: positive and negative polarity models
- Choice of 4, 15, or 30 W maximum output power
- 12 or 24 VDC input
- Maximum Iout capability down to 0 VDC
- Available temperature coefficients to 25 ppm/°C
- Ease of installation with PCB or chassis-mount options
- Reliable modular design, > 400,000 hours MTBF @ 65°C (149°F)
- Factory-configured performance, control, and integration options
- UL/cUL recognized, CE mark (LVD and RoHS), IEC-60950-1

TYPICAL APPLICATIONS

- Electrostatic discharge testers
- Plasma, electrostatic, x-ray, and wire testers

AT A GLANCE

Maximum Output Voltage

30, 35 or 40 kV DC

Maximum Output Power

30 W

Type

Single Output

Ripple

To 100 ppm (2.5 Vpp)

Control Interface

Analog

Temperature Coefficient

To 25 ppm/°C

©2022 Advanced Energy Industries, Inc.

ELECTRICAL SPECIFICATIONS

Parameter	Conditions	Models									Units
Input		**12 V**			**24 V**						
Input Voltage Range	Full Power	+11 to 16			+23 to 30						VDC
	Derated Power Range	+9 to 32			+9 to 32						VDC
Input Current	Standby/Disable	< 30			< 30						mA
	No Load, Max Eout 30A series 35A series 40A series	 < 0.25 < 0.35 < 0.38			 < 0.30 < 0.20 < 0.38						 mA mA mA
	Max Load, Max Eout	~800			~1800						mA
AC Ripple Current	Nominal Input, Full Load	< 80			< 80						mA pk-pk
Output		**30A**			**35A**			**40A**			
Output Voltage Range	Nominal Output	0 to 30,000			0 to 35,000			0 to 40,000			VDC
Nominal Input Voltage/Model		12	24	24	12	24	24	12	24	24	VDC
Ouptut Power	Nominal Input, Max Eout	4	15	30	4	15	30	4	15	30	W
Output Current	Iout Entire Output Voltage Range	0.13	0.50	1.0	0.11	0.42	0.86	0.10	0.37	0.75	mA
Ouptut Current Scale Factor	Full Load	0.140	0.173	0.181	0.158	0.179	0.184	0.077	0.089	0.092	mA/V
Output Voltage Monitor Scaling		1000:1 ±2% into 10 MΩ									-
Ripple	Full Load, Max Eout, 300 pF bypass Cap.	0.025	0.039	0.058	0.025	0.040	0.075	0.030	0.060	0.064	%V pk-pk
Ripple with -F-M Option	Full Load, Max Eout, 300 pF bypass Cap.	0.021	0.028	0.048	0.016	0.034	0.040	0.007	0.025	0.053	%V pk-pk
Dynamic Load Regulation	½ to Full Load, Max Eout per 0.1 mA	< 10.0	< 10.0	< 10.0	< 10.0	< 10.0	< 10.0	< 10.0	< 10.0	< 10.0	V pk
Line Regulation	Nom. Input, Max Eout, Full Power	< 0.01%									VDC
Static Load Regulation	No Load to Full Load, Max Eout	< 0.01%									VDC
Stability	30 Min Warmup, Per 8 h, Per Day	< 0.01%/< 0.02%									VDC
Programming and Controls		**All Types**									
Input Impedance	Nominal Input	+Output models 1.1 MΩ to GND, -Output models 1.1 MΩ to +5 vRef.									MΩ
Adjust Resistance	Typical Potentiometer Values	10 to 100 K (potentiometer across vRef. and signal ground, wiper to adjust)									Ω
Adjust Logic	0 to +5 for +Out, +5 to 0 for - Out	+4.64 VDC for +output or +0.36 for -output = nominal Eout									-
Output Voltage and Impedance	T = +25°C	+5.00 VDC ±2%, Zout = 464 Ω ±1%									-
Enable/Disable		0 to +0.5 disable, +2.4 to 32 enable (default = enable)									VDC

ELECTRICAL SPECIFICATIONS (CONTINUED)

Environmental		Standard	-25PPM Option	
Operating	Full Load, Max Eout, Case Temperature	-40 to +65	+10 to +45	°C
Coefficient	Over the Specified Temperature	±50	±25	PPM/°C
Thermal Shock	Mil-Std 810, Method 503-4, Proc. II	-40 to +65		°C
Storage	Non-Operating, Case Temperature	-55 to +105		°C
Humidity	All Conditions, Standard Package	0 to 95%, non-condensing		-
Altitude	Standard Package, All Conditions	Sea level through vacuum (Vacuum may require -P2 option, contact factory for details.)		-
Shock	Mil-Std-810, Method 516.5, Proc. IV	20 (Standard), 40 (-C Option)		Gs
Vibration	Mil-Std-810, Method 514.5, Fig.514.5C-3	10 (Standard), 20 (-C Option)		Gs

MECHANICAL SPECIFICATIONS

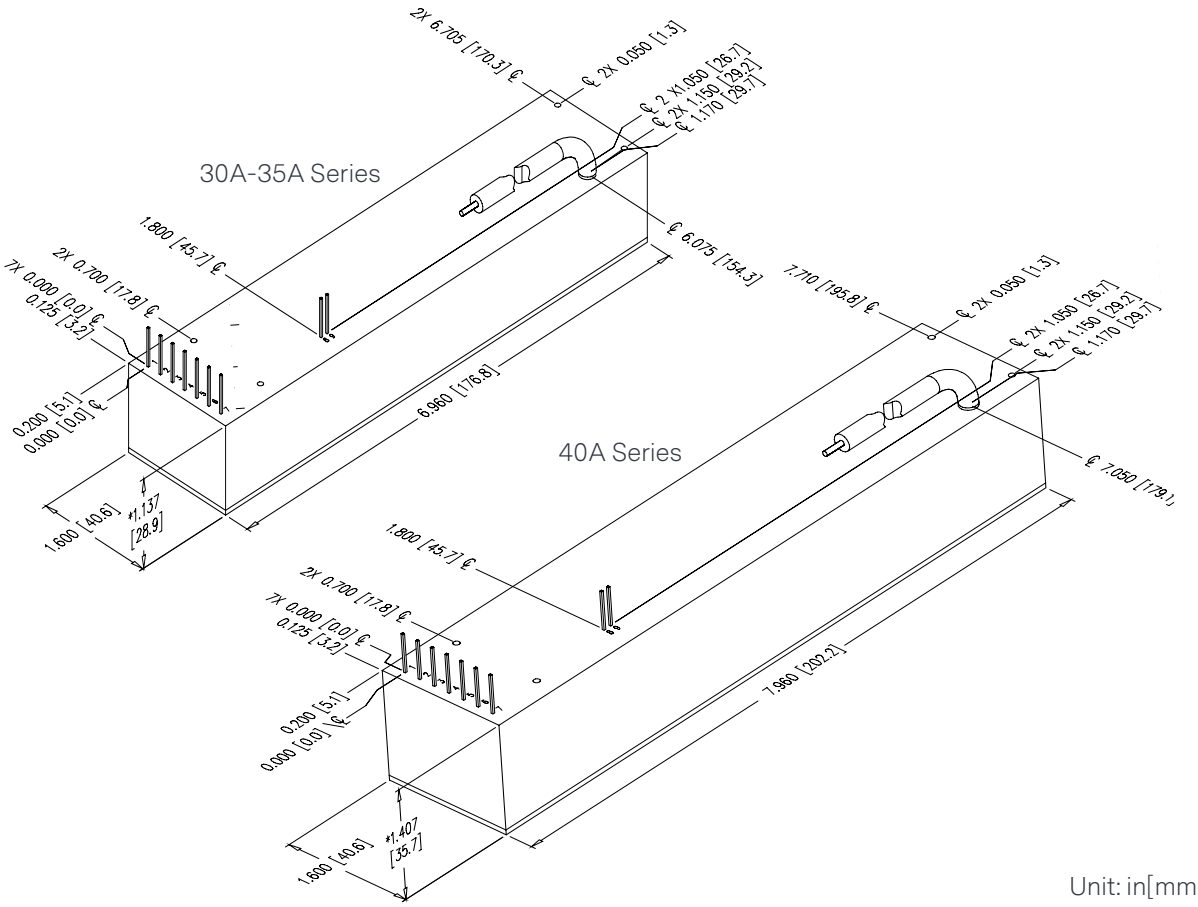

Unit: in[mm]

Volumes and Weights			w/-C Option	
	cm³	in³	cm³	in³
Volume				
30A / 35A	207.46	12.66	327.80	20.00
40A	293.66	17.92	442.53	27.00
	g	oz	g	oz
Weight				
30A / 35A	425.25	15.00	623.69	22.00
40A	595.34	21.00	850.49	30.00

Tolerance	
Overall	±1.27 mm (0.050")
Pin to Pin	±0.38 mm (0.015")
Mounting Hole Location	±0.64 mm (0.025")

Construction	
Standard Case	RTV silicone-filled DAP box certified to ASTM-D-5948 with -C option
Optional Case (-C option)	Aluminum Alloy 5052-H32, Finish: MIL-A-8625 Type II (Anodizing)

-M equipped units are an additional 0.76 mm (0.030") for all dimensions.

Contact AE for drawings of models equipped with -E or -H options.

INTERFACE

Connections	
Pin	**Function**
1	Input-Power Ground Return
2	Positive Power Input
3	Iout Monitor
4	Enable/Disable
5	Signal Ground Return
6	Remote Adjust Input
7	+5 VDC Reference Output
8	HV Ground Return
9	Eout Monitor
HV Output	Flying lead 460 mm (18")

All grounds joined internally. Power supply mounting points isolated from internal grounds by > 100 kΩ, .0 1uF / 50 V (Max) on all models except -M (15 W and above), -M-E, -M-C, and -M-H configurations which are 0 Ω.

ORDERING INFORMATION

Options		
Type	0 to 30,000 VDC Output	30A
	0 to 35,000 VDC Output	35A
	0 to 40,000 VDC Output	40A
Input	12 VDC Nominal (4 W only)	12
	24 VDC Nominal (15 W and 30 W only)	24
Polarity	Positive Output	-P
	Negative Output	-N
Power	Watts Output (12 V Only)	4
	Watts Output (24 V Only)	15
	Watts Output (24 V Only)	30
Case	Plastic Case: - Diallyl Phthalate	(Standard)
	"Eared" Chassis Mounting Plate	-E
	RF-Tight Aluminum Enclosure	-C
Heat Sink	0.400" High (Sized to Fit Case)	-H
Shield	Six-sided Mu-Metal Shield	-M
Temperature Coefficient	25 PPM Temperature Coefficient	-25 PPM
Ripple Stripper®	Integral Output Filter (See -F Option Data Sheet) and Mu-Metal	-F (-M option is required)
Lead options	Shielded Flying Lead	-AS
	Protected Flying Lead	-AP
	Terminated Flying Lead (Contact Customer Service)	-ATxx

For more information on the enhanced interface options, download the I5/I10 option datasheet.

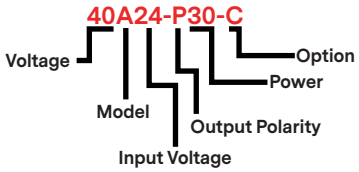

ABOUT ADVANCED ENERGY

Since 1981, UltraVolt® — now part of the Advanced Energy (AE) family — has perfected how power performs for its customers. For both end users and OEMs, AE's comprehensive portfolio of standard and custom high voltage components precisely match system specifications to deliver unparalleled energy, quality, and performance. Through close customer collaboration, design expertise, application insight, and world-class support, AE creates successful partnerships and enables customers to push the boundaries of innovation and stay ahead of evolving market needs.

PRECISION | POWER | PERFORMANCE | TRUST



CAUTION:
High Voltage

Read and understand all documentation before you install, operate, or maintain Advanced Energy high voltage power supplies. Follow all safety instructions and precautions to protect against property damage and serious or possibly fatal bodily injury. Never defeat safety interlocks or grounds.

Advanced Energy

For international contact information,
visit advanced-energy.com.

powersales@aei.com (Sales Support)
productsupport.ep@aei.com (Technical Support)
+1 888 412 7832

Specifications are subject to change without notice. Not responsible for errors or omissions. ©2022 Advanced Energy Industries, Inc. All rights reserved. Advanced Energy®, AE®, and UltraVolt® are U.S. trademarks of Advanced Energy Industries, Inc.

CE c UL us IEC-60950-1 RoHS

ENG-HV-30A-40Aseries-231-Z 9.28.22