ULTRAVOLT DUAL POLARITY 1/8C TO 6C SERIES

DUAL OUTPUT HIGH VOLTAGE, HIGH POWER CONVERTERS

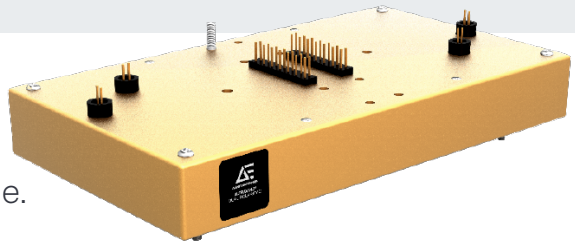

The UltraVolt® Dual Polarity C integrates two high power DC-to-DC converters of opposite polarity into a single package.

PRODUCT HIGHLIGHTS

- Regulated high voltage outputs ranging from ±125 to ±6 kV VDC maximum
- Positive and negative unipolar outputs, independently controllable
- Choice of 120 W (2 x 60 W) or 250 W (2 x 125 W) total output power
- 24 VDC input
- Output ripple performance < 1.0%
- Controlled high voltage overshoot enhances longevity of external load components
- Temperature coefficient < 50 ppm/°C
- Ease of installation with chassis or PCB-mount options
- Simplified integration with available 0 to 5 VDC or 0 to 10 VDC interface
- Reliable modular design
- Factory-configured performance, control and integration options
- UL/cUL recognized, IEC-60950-1, CE mark (LVD and RoHS)

TYPICAL APPLICATIONS

- High voltage power rails for Amplifiers and Piezoelectric devices
- High voltage capacitor charging
- Pulse generators and pulsed power
- Ultrasound
- Lasers and opto-electronics

AT A GLANCE

Maximum Output Voltage

125, 250, 500, 1 k, 2 k, 4 k, or 6 k VDC

Maximum Output Power

250 W

Type

Dual Output

Ripple

< 1.0 %

Control

Analog

Temperature Coefficient

50 ppm/°C

Ordering Information on Page 11

©2019 Advanced Energy Industries, Inc.

ELECTRICAL SPECIFICATIONS

Model[1]		1/8C Series		1/4C Series	
High Voltage Output Range (Adjustable Regulated, Positive Polarity Unit)		0 to +125 VDC		0 to +250 VDC	
High Voltage Output Range (Adjustable Regulated, Negative Polarity Unit)		0 to -125 VDC		0 to -250 VDC	
High Voltage Outputs		Dual Unipolar		Dual Unipolar	
Input Voltage (VDC, Nominal)		24 VDC		24 VDC	
Power Output (Total Watts, Nominal)		120 W	250 W	120 W	250 W
DC Input (Separately for Positive Polarity Unit and Negative Polarity Unit)					
Vin Range (Input Voltage)	VDC (positive polarity only)	23 to 30		23 to 30	
Vin (Nominal)	VDC	24		24	
Iin (Input Current, Nominal)	A @ 100% HVout, 100% LOAD (per unit)	< 3.3	< 6.9	< 3.3	< 6.9
	A @ 100% HVout, 0% LOAD (per unit)	< 0.5	< 0.8	< 0.5	< 0.8
	A @ disable/standby state (per unit)	< 0.075		< 0.075	
DC Output (Separately for Positive Polarity Unit and Negative Polarity Unit)					
HVout (Output Voltage)	VDC (positive polarity unit = +HVout)	0 to +125		0 to +250	
HVout (Output Voltage)	VDC (negative polarity unit = -HVout)	0 to -125		0 to -250	
Iout (Output Current, Per Unit)	mA (max) @ 0 to 100% HVout, Vin (nominal)	480	1000	240	500
Pout (Output Power, Per Unit)	Watts (max)	60	125	60	125
Ripple[2,3]	%	< 1.0		< 1.0	
	ppm	< 10,000		< 10,000	
	Vpp	< 1.3		< 2.5	

Model[1]		1/2C Series		1C Series	
High Voltage Output Range (Adjustable Regulated, Positive Polarity Unit)		0 to +500 VDC		0 to +1000 VDC	
High Voltage Output Range (Adjustable Regulated, Negative Polarity Unit)		0 to -500 VDC		0 to -1000 VDC	
High Voltage Outputs		Dual Unipolar		Dual Unipolar	
Input Voltage (VDC, Nominal)		24 VDC		24 VDC	
Power Output (Total Watts, Nominal)		120 W	250 W	120 W	250 W
DC Input (Separately for Positive Polarity Unit and Negative Polarity Unit)					
Vin Range (Input Voltage)	VDC (positive polarity only)	23 to 30		23 to 30	
Vin (Nominal)	VDC	24		24	
Iin (Input Current, Nominal)	A @ 100% HVout, 100% LOAD (per unit)	< 3.3	< 6.9	< 3.3	< 6.9
	A @ 100% HVout, 0% LOAD (per unit)	< 0.5	< 0.8	< 0.5	< 0.8
	A @ disable/standby state (per unit)	< 0.075		< 0.075	
DC Output (Separately for Positive Polarity Unit and Negative Polarity Unit)					
HVout (Output Voltage)	VDC (positive polarity unit = +HVout)	0 to +500		0 to +1000	
HVout (Output Voltage)	VDC (negative polarity unit = -HVout)	0 to -500		0 to -1000	
Iout (Output Current, Per Unit)	mA (max) @ 0 to 100% HVout, Vin (nominal)	120	250	60	125
Pout (Output Power, Per Unit)	Watts (max)	60	125	60	125
Ripple[2,3]	%	< 1.0		< 1.0	
	ppm	< 10,000		< 10,000	
	Vpp	< 5.0		< 10	

ELECTRICAL SPECIFICATIONS (CONTINUED)

Model[1]		2C Series		4C Series	
High Voltage Output Range (Adjustable Regulated, Positive Polarity Unit)		0 to +2000 VDC		0 to +4000 VDC	
High Voltage Output Range (Adjustable Regulated, Negative Polarity Unit)		0 to -2000 VDC		0 to -4000 VDC	
High Voltage Outputs		Dual Unipolar		Dual Unipolar	
Input Voltage (VDC, Nominal)		24 VDC		24 VDC	
Power Output (Total Watts, Nominal)		120 W	250 W	120 W	250 W
DC Input (Separately for Positive Polarity Unit or Negative Polarity Unit)					
Vin (Input Voltage) Range	VDC (positive polarity only)	23 to 30		23 to 30	
Vin (Nominal)	VDC	24		24	
Iin (Input Current, Nominal)	A @ 100% HVout, 100% LOAD (per unit)	< 3.3	< 6.9	< 3.3	< 6.9
	A @ 100% HVout, 0% LOAD (per unit)	< 0.5	< 0.8	< 0.5	< 0.8
	A @ disable/standby state (per unit)	< 0.075		< 0.075	
DC Output (Separately for Positive Polarity Unit or Negative Polarity Unit)					
HVout (Output Voltage)	VDC (positive polarity unit = +HVout)	0 to +2000		0 to +4000	
HVout (Output Voltage)	VDC (negative polarity unit = -HVout)	0 to -2000		0 to -4000	
Iout (Output Current, Per Unit)	mA (max) @ 0 to 100% HVout, Vin (nominal)	30	63	15	31
Pout (Output Power, Per Unit)	Watts (max)	60	125	60	125
Ripple[2,3]	%	< 1.0		< 1.0	
	ppm	< 10,000		< 10,000	
	Vpp	< 20		< 40	

Model[1]		6C Series	
High Voltage Output Range (Adjustable Regulated, Positive Polarity Unit)		0 to +6000 VDC	
High Voltage Output Range (Adjustable Regulated, Negative Polarity Unit)		0 to -6000 VDC	
High Voltage Outputs		Dual Unipolar	
Input Voltage (VDC, Nominal)		24 VDC	
Power Output (Total Watts, Nominal)		120 W	250 W
DC Input (Separately for Positive Polarity Unit or Negative Polarity Unit)			
Vin (Input Voltage) Range	VDC (positive polarity only)	23 to 30	
Vin (Nominal)	VDC	24	
Iin (Input Current, Nominal)	A @ 100% HVout, 100% LOAD (per unit)	< 3.3	< 6.9
	A @ 100% HVout, 0% LOAD (per unit)	< 0.5	< 0.8
	A @ disable/standby state (per unit)	< 0.075	
DC Output (Separately for Positive Polarity Unit or Negative Polarity Unit)			
HVout (Output Voltage)	VDC (positive polarity unit = +HVout)	0 to +6000	
HVout (Output Voltage)	VDC (negative polarity unit = -HVout)	0 to -6000	
Iout (Output Current, Per Unit)	mA (max) @ 0 to 100% HVout, Vin (nominal)	10	21
Pout (Output Power, Per Unit)	Watts (max)	60	125
Ripple[2,3]	%	< 1.0	
	ppm	<10,000	
	Vpp	< 60	

ELECTRICAL SPECIFICATIONS (CONTINUED)

Stability and Regulation	
Stability	0.01% (100 ppm) @ 100% HVout (after 30 min warmup interval)
	0.02% (200 ppm) @ 100% HVout (per 8 h interval)
Line Regulation	0.01% (100 ppm) @ 100% HVout, 100% Pout, Vin (nominal)
Static Load Regulation	0.01% (100 ppm) @ 100% HVout, 0 to 100% LOAD
Temperature Coefficient	50 ppm/°C (over operating temperature range)
Power-On Rise Time	Application dependent (See Rise Time / Capacitor Charging equations)

Environmental	
Operating Temperature Range	-40 to 65°C (-40 to 149°F) case bottom temperature
Storage	-55 to 105°C (-67 to 222°F) case temperature
Humidity	0 to 95% RH, non-condensing
Altitude	Sea level to 3000 m (10,000 ft)

Regulatory	
Certifications	UL/cUL recognized, IEC-60950-1, CE Mark (LVD and RoHS)

[1] Standard product specifications shown unless noted. Custom configurations are available.

[2] Nominal ripple measured @ 100% HVout, 100% LOAD into Cx > 0.5µF. Valid for 10 to 100% HVout range.

[3] Vpp = VDC peak-to-peak @ 100% HVout, % = Percent @ 100% HVout (Vpp), ppm = parts per million @ 100% HVout (Vpp)

MECHANICAL SPECIFICATIONS

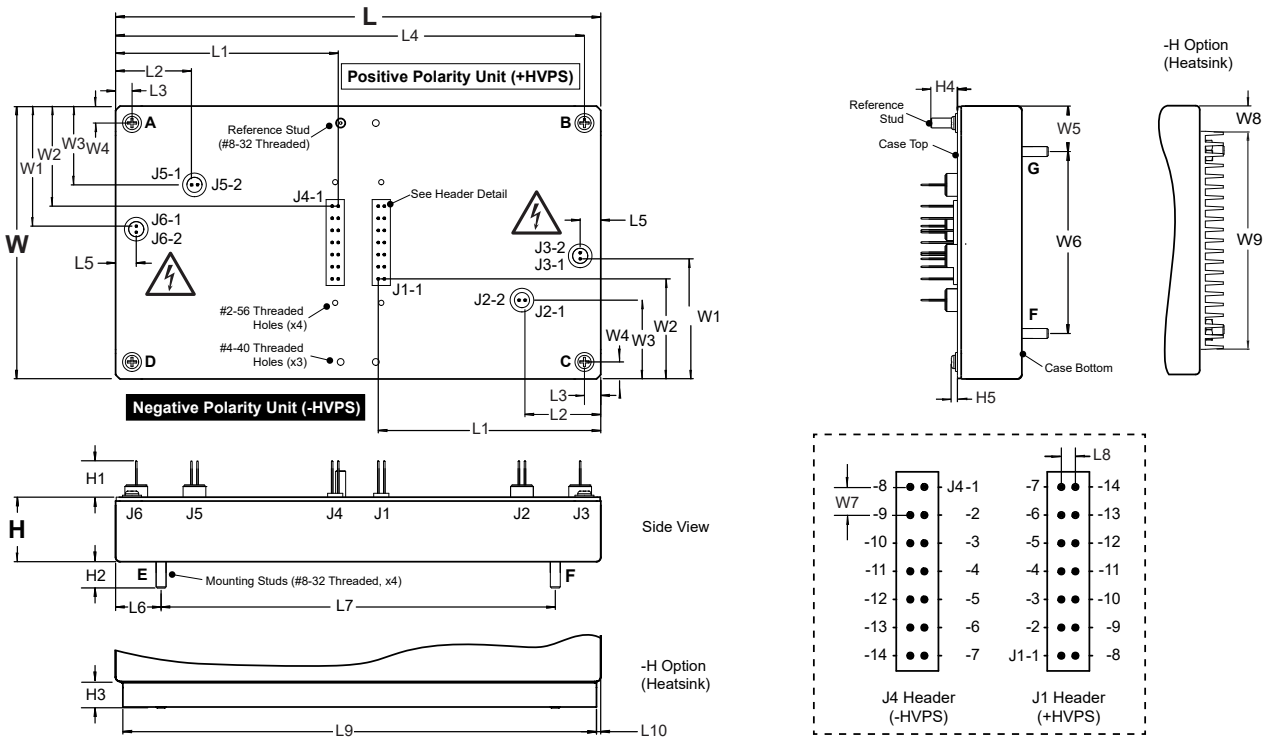

Volumes and Weights	All Models	
	cm^3	in^3
Volume (Module Body Only)	635	38.7
Volume (Module Body, plus -H Option Height)	890	54.3
	g	oz
Weight (Standard Configuration)	1140	40.2
Weight (with -H Option)	1460	51.5

Construction	
Standard Case	Aluminum (Anodized per MIL-A-8625 Type II)
Heatsink	Aluminum (Anodized, -H Option)
PCB Standoffs	Zinc-plated steel (-Z11 Option)
Labels	Static-dissipative polyester
Cooling	Natural convection and conduction
Encapsulation	Silicone-based RTV (contact factory for other options)
Pins	Gold-plated bronze

MECHANICAL SPECIFICATIONS (CONTINUED)

Dimensions		All Models	
Key	Description[1,2,3,4]	mm	in
L	**Overall Length**	**203.2**	**8.00**
L1	Case Exterior to J1-1 / J4-1	93.0	3.66
L2	Case Exterior to J5-1 / J2-1	32.1	1.26
L3	Case Exterior to Centerline Screw A / D	7.1	0.28
L4	Case Exterior to Centerline Screw B / C	196.1	7.72
L5	Case Exterior to J3-1 / J6-1	9.0	0.35
L6	Case Exterior to Mounting Stud E	19.0	0.75
L7	Centerline, Mounting Stud E to F	165.0	6.50
L8	Pin-to-Pin Centerline Length of J1 and J4 Header (typical)	2.6	0.10
L9	Heatsink (Overall Length, -H Option)	198.0	7.80
L10	Case Exterior to Heatsink Edge (-H Option)	2.6	0.10
W	**Overall Width**	**114.3**	**4.5**
W1	Case Exterior to J6-1 / J3-1	50.1	1.97
W2	Case Exterior to J4-1 / J1-1	42.1	1.65
W3	Case Exterior to J5-1 / J2-1	33.0	1.30
W4	Case Exterior to Screw A / D	7.1	0.28
W5	Case Exterior to Mounting Stud G / H	19.0	0.75
W6	Centerline, Mounting Stud E to F/ (G to H)	76.2	3.00
W7	Pin-to-Pin Centerline Width of J1 and J4 Header (typical)	5.1	0.20
W8	Case Exterior to Heatsink Edge (-H Option)	11.0	0.43
W9	Heatsink (Overall Width, -H Option)	93.0	3.66
H	**Case Height (Case Bottom to Top, Max)**	**27.4**	**1.08**
H1	Case Top to J6 Header Tip (typical)	15.1	0.59
H2	Length of Mounting Stud E, F, G, H (typical)	11.1	0.43
H3	Heatsink Height (-H Option)	10.2	0.40
H4	Length of Reference Stud	11.0	0.43
H5	Case Top of Screw A /B / C / D Top (typical)	2.6	0.10

[1] Approximate nominal dimensions and weights.

[2] Header pin-to-pin tolerances are ± 0.76 mm (± 0.015 in).

[3] Mounting Stud H is not shown.

[4] Refer to outline drawings and 3D models for detailed information.

INTERFACE

Two Standard Interfaces on the Dual Polarity C series permit voltage and monitoring of both output voltage and current using analog DC signals whose range and polarity vary by model. Schematics and control parameters apply to both the positive polarity (+HVPS) and negative polarity (-HVPS) interfaces.

Standard Interfaces

Pin (+HVPS)	Pin (-HVPS)	Label	Type	Description
J1-1	J4-1	Gnd	Ground	DC Input Power Ground
J1-2	J4-2	Vin	Input	DC Input Power
J1-3	J4-3	Imon	Output	Monitor HVout Current Level
J1-4	J4-4	Enable	Input	Enable HVout[1]
J1-5	J4-5	SGnd	Ground	Signal Ground
J1-6	J4-6	Vprog	Input	Set HVout Voltage Level
J1-7	J4-7	Vref	Output	Control Signal Reference[2]
J1-8	J4-8	Gnd	Ground	DC Input Power Ground
J1-9	J4-9	Vin	Input	DC Input Power
J1-10	J4-10	N/C		No Connection
J1-11	J4-11	N/C		No Connection
J1-12	J4-12	N/C		No Connection
J1-13	J4-13	N/C		No Connection
J1-14	J4-14	Vmon	Output	Monitor HVout Voltage Level
J2-1	J5-1	HVret	Ground	High Voltage Return
J2-2	J5-2	HVret	Ground	High Voltage Return
J3-1	J6-1	HVout	Output	High Voltage Output
J3-2	J6-1	HVout	Output	High Voltage Output

[1] Signal inputs: LOW < 0.8 VDC, HIGH > 2.0 VDC (OPEN OR HIGH = ENABLED)

[2] 5 VDC ±2% through 464 W impedance load.

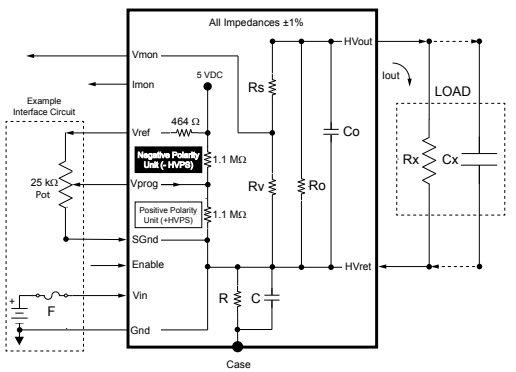

-I5 and -I10 Interfaces (Optional)

Pin (+HVPS)	Pin (-HVPS)	Label	Type	Description
J1-1	J4-1	Gnd	Ground	DC Input Power Ground
J1-2	J4-2	Vin	Input	DC Input Power
J1-3	J4-3	Imon	Output	Monitor HVout Current Level[1,6]
J1-4	J4-4	Enable	Input	Enable HVout[2]
J1-5	J4-5	SGnd	Ground	Signal Ground
J1-6	J4-6	Vprog	Input	Set HVout Voltage Level
J1-7	J4-7	Vref	Output	Control Reference Signal[3,4]
J1-8	J4-8	Gnd	Ground	DC Input Power Ground
J1-9	J4-9	Vin	Input	DC Input Power
J1-10	J4-10	N/C		No Connection
J1-11	J4-11	Imode	Output	Current Mode Indicator[5]
J1-12	J4-12	Vmode	Output	Voltage Mode Indicator[5]
J1-13	J4-13	Iprog	Input	Set HVout Current Level
J1-14	J4-14	Vmon	Output	Monitor HVout Voltage Level[1,6]
J2-1	J5-1	HVret	Ground	High Voltage Return[6]
J2-2	J5-2	HVret	Ground	High Voltage Return[7]
J3-1	J6-1	HVout	Ground	High Voltage Output
J3-2	J6-2	HVout	Ground	High Voltage Output

[1] Can source an output impedance load < 10kW

[2] Signal input: LOW < 0.8 VDC, HIGH > 2.0 VDC (OPEN OR LOW = DISABLED)

[3] -I5 interface: 5 VDC ±0.1% @ 5 mA (nominal at case temperature = 25°C, 77°F)

[4] -I10 interface: 10 VDC ±0.1% @ 5 mA (nominal at case temperature = 25°C, 77°F)

[5] LOW = Mode ON (open drain) will sink up to 30 mA.

[6] Voltage/current monitors will source/sink up to 2 mA.

[7] For proper operation and safety, always route HVret signal thru HVret connection.

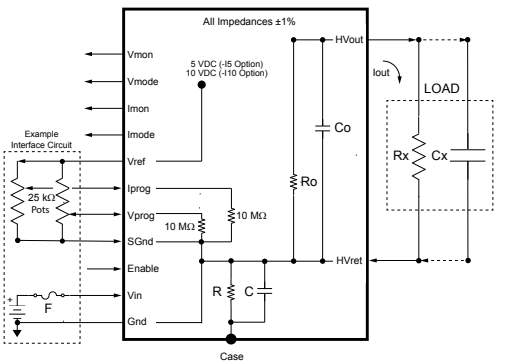

INTERFACE CONTROL PARAMETERS

Model		1/8C Series		1/4C Series		1/2C Series		1C Series	
High Voltage Output Range (Positive Polarity Unit)		0 to +125 VDC		0 to +250 VDC		0 to +500 VDC		0 to +1000 VDC	
High Voltage Output Range (Negative Polarity Unit)		0 to -125 VDC		0 to -250 VDC		0 to -500 VDC		0 to -1000 VDC	
Input Voltage (VDC, Nominal)		24 VDC		24 VDC		24 VDC		24 VDC	
Power Output (Watts, Nominal, Total)		120 W	250 W	120 W	250 W	120 W	250 W	120 W	250 W
Standard Interface (Monitor/Control Voltage, Monitor Current)									
Scale Factors[1,2,3]	SVm (V/V) where HVout Monitor = SVm x Vmon	1000		1000		1000		1000	
Positive Polarity Unit	SVp (V/V) where HVout Control = SVp x Vprog	27		54		108		216	
Negative Polarity Unit	SVp (V/V) where HVout Control = SVp x (5 - Vprog)	-27		-54		-108		-216	
	SIm (mA/V) where Iout Monitor = SIm x Imon	103	216	51.7	108	25.9	53.9	12.9	26.9
	SIp (mA/V) where Iout Control = SIp x Iprog	N/A		N/A		N/A		N/A	
Impedances[4]	Ro (HVout impedance, ± 1%)	1.04 MΩ		2.55 MΩ		5.05 MΩ		10 MΩ	
	Rs (Vmon upper tap impedance, ± 1%)	100 MΩ		100 MΩ		100 MΩ		100 MΩ	
	Rv (Vmon lower tap impedance, ± 1%)	1.12 MΩ		1.12 MΩ		1.12 MΩ		1.12 MΩ	
-I5 Interface (0 to 5 VDC, Monitor/Control Both Voltage and Current)									
Scale Factors[5,6,8,9]	SVm (V/V) where HVout Monitor = SVm x Vmon	25		50		100		200	
	SVp (V/V) where HVout Control = SVp x Vprog	25		50		100		200	
	SIm (mA/V) where Iout Monitor = SIm x Imon	96	200	48	100	24	50	12	25
	SIp (mA/V) where Iout Control = SIp x Iprog	96	200	48	100	24	50	12	25
Impedances[4]	Ro (HVout impedance, ±1%)	1.04 MΩ		2.55 MΩ		5.05 MΩ		10.1 MΩ	
-I10 Interface (0 to 10 VDC, Monitor/Control Both Voltage and Current)									
Scale Factors[5,7,8,9]	SVm (V/V) where HVout Monitor = SVm x Vmon	12.5		25		50		100	
	SVp (V/V) where HVout Control = SVp x Vprog	12.5		25		50		100	
	SIm (mA/V) where Iout Monitor = SIm x Imon	48	100	24	50	12	25	6	12.5
	SIp (mA/V) where Iout Control = SIp x Iprog	48	100	24	50	12	25	6	12.5
Impedances[4]	Ro (HVout impedance, ±1%)	1.04 MΩ		2.55 MΩ		5.05 MΩ		10.1 MΩ	
Other Interface Values									
Impedances[4]	R (between HVret and case, ±1%)	1.10 MΩ		1.10 MΩ		1.10 MΩ		1.10 MΩ	
	R (standard case with -I5 /-I10 option, ±1%)	1.10 MΩ		1.10 MΩ		1.10 MΩ		1.10 MΩ	
Capacitance[4]	C (@ 50 VDC ±10%, 1/8 W, max)	0.01 mF		0.01 mF		0.01 mF		0.01 mF	
	Co (Internal storage capacitance)	0.66 µF		0.20 µF		0.094 µF		0.034 µF	
Input Voltage Protection	F (fuse or other protection recommended)	See note 10		See note 10		See note 10		See note 10	

[1] For positive polarity unit, Vprog varies from 0 to 4.64 VDC. For negative polarity unit, Vprog varies inversely from 5 to 0.36 VDC.

[2] SIm factor is ±2% @ 100% LOAD, 100% HVout. Valid from 10 to 100% Iout.

[3] SVm factor is ±2% assuming a 10 MΩ measurement impedance. Valid from 10 to 100% HVout.

[4] See interface schematic for definition.

[5] Applies to interfaces on both positive and negative polarity units. For details on -I5/-I10 interfacing, see technical note TN-I5-I10-1.

[6] For the -I5 interface, Imon, Iprog, Vmon, and Vprog input/output signals vary from 0 to 5 VDC (full-scale).

[7] For the -I10 interface, Imon, Iprog, Vmon, and Vprog input/output signals vary from 0 to 10 VDC (full-scale).

[8] SVm factor is ±1% for both -I5 and -I10 Interfaces. SVp factor is also ±1% and is only valid for 10 to 100% HVout.

[9] SIm factor is ±1% for both -I5 and -I10 Interfaces. SIp factor is also ±1% and is only valid for 10 to 100% Iout.

[10] For details on fuse selection, see technical note TN-23.

INTERFACE CONTROL PARAMETERS (CONTINUED)

Model		2C Series		4C Series		6C Series	
High Voltage Output Range (Positive Polarity Unit)		0 to +2000 VDC		0 to +4000 VDC		0 to +6000 VDC	
High Voltage Output Range (Negative Polarity Unit)		0 to -2000 VDC		0 to -4000 VDC		0 to -6000 VDC	
Input Voltage (VDC, Nominal)		24 VDC		24 VDC		24 VDC	
Power Output (Watts, Nominal, Total)		120 W	250 W	120 W	250 W	120 W	250 W
Standard Interface (Monitor/Control Voltage, Monitor Current)							
Scale Factors[1,2,3]	SVm (V/V) where HVout Monitor = SVm x Vmon	1000		1000		1000	
Positive Polarity Unit	SVp (V/V) where HVout Control = SVp x Vprog	431		862		1293	
Negative Polarity Unit	SVp (V/V) where HVout Control = SVp x (5 - Vprog)	-431		-862		-1293	
	SIm (mA/V) where Iout Monitor = SIm x Imon	6.5	13.5	3.2	6.7	2.2	4.5
	SIp (mA/V) where Iout Control = SIp x Iprog	N/A		N/A		N/A	
Impedances[4]	Ro (HVout impedance, ± 1%)	20.1 MΩ		40.1 MΩ		60.1 MΩ	
	Rs (Vmon upper tap impedance, ± 1%)	100 MΩ		100 MΩ		100 MΩ	
	Rv (Vmon lower tap impedance, ± 1%)	1.12 MΩ		1.12 MΩ		1.12 MΩ	
-I5 Interface (0 to 5 VDC, Monitor/Control Both Voltage and Current)							
Scale Factors[5,6,8,9]	SVm (V/V) where HVout Monitor = SVm x Vmon	400		800		1200	
	SVp (V/V) where HVout Control = SVp x Vprog	400		800		1200	
	SIm (mA/V) where Iout Monitor = SIm x Imon	6.0	12.5	3.0	6.3	2.0	4.2
	SIp (mA/V) where Iout Control = SIp x Iprog	6.0	12.5	3.0	6.3	2.0	4.2
Impedances[4]	Ro (HVout impedance, ±1%)	20.1 MΩ		40.1 MΩ		60.1 MΩ	
-I10 Interface (0 to 10 VDC, Monitor/Control Both Voltage and Current)							
Scale Factors[5,7,8,9]	SVm (V/V) where HVout Monitor = SVm x Vmon	200		400		600	
	SVp (V/V) where HVout Control = SVp x Vprog	200		400		600	
	SIm (mA/V) where Iout Monitor = SIm x Imon	3	6.3	1.5	3.1	1	2.1
	SIp (mA/V) where Iout Control = SIp x Iprog	3	6.3	1.5	3.1	1	2.1
Impedances[4]	Ro (HVout impedance, ±1%)	20.1 MΩ		40.1 MΩ		60.1 MΩ	
Other Interface Values							
Impedances[4]	R (between HVret and case, ±1%)	1.10 MΩ		1.10 MΩ		1.10 MΩ	
	R (standard case with -I5 /-I10 option, ±1%)	1.10 MΩ		1.10 MΩ		1.10 MΩ	
Capacitances[4]	C (@ 50 VDC ±10%, 1/8 W, max)	0.01 mF		0.01 mF		0.01 mF	
	Co (Internal storage capacitance)	0.0168 µF		0.0084 µF		0.0056 µF	
Input Voltage Protection	F (fuse or other protection recommended)	See note 10		See note 10		See note 10	

[1] For positive polarity unit, Vprog varies from 0 to 4.64 VDC. For negative polarity unit, Vprog varies inversely from 5 to 0.36 VDC.

[2] SIm factor is ±2% @ 100% LOAD, 100% HVout. Valid from 10 to 100% Iout.

[3] SVm factor is ±2% assuming a 10 MΩ measurement impedance. Valid from 10 to 100% HVout.

[4] See interface schematic for definition.

[5] Applies to interfaces on both positive and negative polarity units. For details on -I5/-I10 interfacing, see technical note TN-I5-I10-1.

[6] For the -I5 interface, Imon, Iprog, Vmon, and Vprog input/output signals vary from 0 to 5 VDC (full-scale).

[7] For the -I10 interface, Imon, Iprog, Vmon, and Vprog input/output signals vary from 0 to 10 VDC (full-scale).

[8] SVm factor is ±1% for both -I5 and -I10 Interfaces. SVp factor is also ±1% and is only valid for 10 to 100% HVout.

[9] SIm factor is ±1% for both -I5 and -I10 Interfaces. SIp factor is also ±1% and is only valid for 10 to 100% Iout.

[10] For details on fuse selection, see technical note TN-23.

RISE TIME / CAPACITOR CHARGING

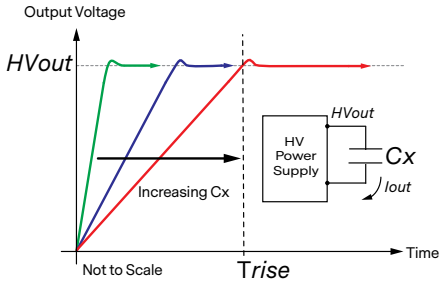

$$Trise = \frac{(Co + Cx) \times HVout}{Iout}$$

$$Iout = (Co + Cx) \times HVout \times freq$$

$$Pout = \frac{(Co + Cx) \times (HVout)^2}{2 \times Trise}$$

Trise = Rise time (Seconds)
Co = Internal storage capacitance (Farads)
Cx = External capacitive load (Farads)
freq = Switching frequency (Hz)
HVout = Output voltage (VDC)
Iout = Output current (Amps)
Pout = Output power (Watts)

STANDARD OPTIONS

The Dual Polarity C can be configured with several options and accessories that adapt its performance and packaging to many application requirements. Customized models to meet specialized voltage ranges, packaging and environmental needs are also available.

Featured Options	
-I5	Upgrades analog interface to provide more precise control and monitoring of both HVout and Iout using 0 to 5 VDC (full scale) signals. Also adds Iout control and voltage/current mode indication capablility not available on the Standard Interface. Not available with -I10 option.
-I10	Upgrades analog interface to provide more precise control and monitoring of both HVout and Iout using 0 to 10 VDC (full scale) signals. Also adds Iout control and voltage/current mode indication capablility not available on the Standard Interface. Not available with -I5 option.
-H	Mounts a heatsink onto the case bottom to assist in convective heat dissipation.
-Z11	Permits PCB mounting by adding 4.8 mm (0.188 in) x #4-40 threaded standoffs to the case top.

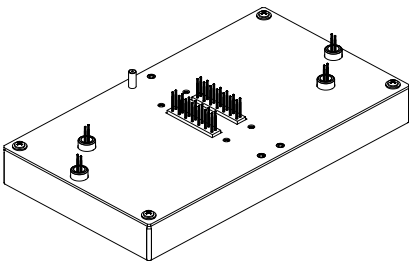

Standard Configuration
(All Interface Options)

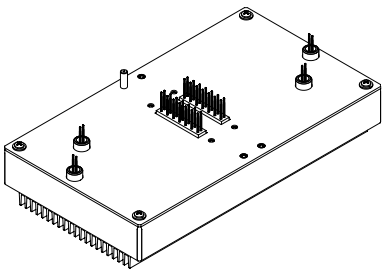

-H Option (Heatsink)

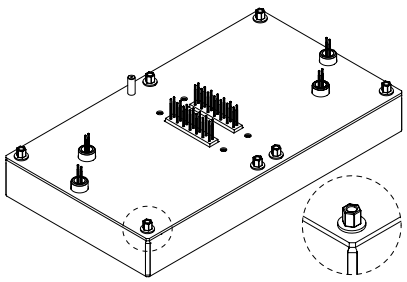

-Z11 Option (PCB Standoffs)

ORDERING INFORMATION

		STANDARD CONFIGURATION												OPTIONS					
		Electrical Performance								Standard Features				Interfaces Select One		Mechanical			
	Standard Part	Number of High Voltage Outputs	High Voltage Output Range (+HVout VDC, Positive Polarity Unit)	High Voltage Output Range (-HVout VDC, Positive Polarity Unit)	Input Voltage (Vin, VDC)	High Voltage Output Polarity (Unipolar)	Positive Polarity Unit Power (Pout, Watts)	Negative Polarity Power (Pout, Watts)	Total Power Output (Pout, Watts)	Dual Standard Interfaces	Aluminum Case (Anodized)	Chassis Mount Studs	50 ppm/°C Temperature Coefficient	Dual -I5 Interfaces (0 to 5 VDC Monitors/Controls)	Dual -I10 Interfaces (0 to 10 VDC Monitors/ Controls)	Heatsink (Anodized Aluminum)	PCB Standoffs (#4-40 x 0.188 in)	Other Options	Version Code (Required)
1/8C	1/8C24-NP125	2	0 to 125	0 to -125	24	Pos/Neg	60	60	120	Included				-I5	-I10	-H	-Z11	Contact factory	-1
	1/8C24-NP250	2	0 to 125	0 to -125	24	Pos/Neg	125	125	250	Included				-I5	-I10	-H	-Z11		-1
1/4C	1/4C24-NP125	2	0 to 250	0 to -250	24	Pos/Neg	60	60	120	Included				-I5	-I10	-H	-Z11		-1
	1/4C24-NP250	2	0 to 250	0 to -250	24	Pos/Neg	125	125	250	Included				-I5	-I10	-H	-Z11		-1
1/2C	1/2C24-NP125	2	0 to 500	0 to -500	24	Pos/Neg	60	60	120	Included				-I5	-I10	-H	-Z11		-1
	1/2C24-NP250	2	0 to 500	0 to -500	24	Pos/Neg	125	125	250	Included				-I5	-I10	-H	-Z11		-1
1C	1C24-NP125	2	0 to 1000	0 to -1000	24	Pos/Neg	60	60	120	Included				-I5	-I10	-H	-Z11		-1
	1C24-NP250	2	0 to 1000	0 to -1000	24	Pos/Neg	125	125	250	Included				-I5	-I10	-H	-Z11		-1
2C	2C24-NP125	2	0 to 2000	0 to -2000	24	Pos/Neg	60	60	120	Included				-I5	-I10	-H	-Z11		-1
	2C24-NP250	2	0 to 2000	0 to -2000	24	Pos/Neg	125	125	250	Included				-I5	-I10	-H	-Z11		-1
4C	4C24-NP125	2	0 to 4000	0 to -4000	24	Pos/Neg	60	60	120	Included				-I5	-I10	-H	-Z11		-1
	4C24-NP250	2	0 to 4000	0 to -4000	24	Pos/Neg	125	125	250	Included				-I5	-I10	-H	-Z11		-1
6C	6C24-NP125	2	0 to 6000	0 to -6000	24	Pos/Neg	60	60	120	Included				-I5	-I10	-H	-Z11		-1
	6C24-NP250	2	0 to 6000	0 to -6000	24	Pos/Neg	125	125	250	Included				-I5	-I10	-H	-Z11		-1

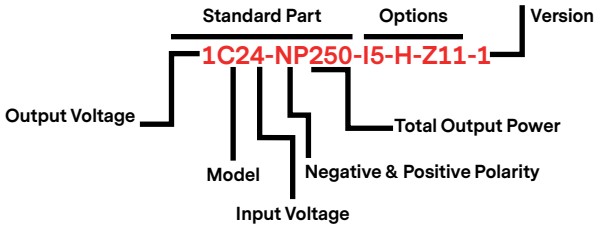

ABOUT ADVANCED ENERGY

Since 1981, Advanced Energy (AE) — and its UltraVolt® family of products — has perfected how power performs for its customers. For both end users and OEMs, AE's comprehensive portfolio of standard and custom high-voltage components precisely match system specifications to deliver unparalleled energy, quality, and performance. Through close customer collaboration, design expertise, application insight, and world-class support, AE creates successful partnerships and enables customers to push the boundaries of innovation and stay ahead of evolving market needs.

PRECISION | POWER | PERFORMANCE



CAUTION:
High Voltage

Read and understand all documentation before you install, operate, or maintain Advanced Energy high voltage power supplies. Follow all safety instructions and precautions to protect against property damage and serious or possibly fatal bodily injury. Never defeat safety interlocks or grounds.

Advanced Energy

For international contact information, visit advancedenergy.com.

uv-ca@aei.com
+1.970.221.0108

Specifications are subject to change without notice. Not responsible for errors or omissions. ©2019 Advanced Energy Industries, Inc. All rights reserved. Advanced Energy®, AE®, and UltraVolt® are U.S. trademarks of Advanced Energy Industries, Inc.

ENG-HV-Dual-Polarity-C-1/8-6-235-01 2.19