ARTESYN CONFIGURABLE NeoPower

Up to 4000 W



NP05



NP08

Advanced Energy's NeoPower (NP) configurable AC-DC power supplies provide high power density as either a programmable voltage or current source. The NeoPower configurable will feature an intuitive software interface and user configurable modules to enable fast prototypes. Modules can be connected in series and parallel with the configurable busbar system to enable 1,000's of output combinations.

The NeoPower is certified for both industrial and medical safety approvals, including compliance to the SEMI F47 standard. The NeoPower supports digital communication with MODBUS RTU for control, monitoring and configuration.

AT A GLANCE

Total Power

Up to 4000 W

Input Voltage

90 to 264 VAC
1-Phase

# of Outputs

Up to 8

SPECIAL FEATURES

- 5 and 8 slot cases available
- Short circuit protection
- Over voltage protection (OVP)
- Over current protection (OCP)
- Over temperature protection (OTP)
- Active power factor correction
- Output on/off control
- Fan speed control
- Power good signal
- Active current share
- Remote voltage sense
- Supports MODBUS RTU digital communication. Supports PMBus, CANOPEN and MODBUS TCP (ethernet) with an adapter
- Input to Output: 5000 VAC or 7000 VDC, 2 x MOPP
  Input to Earth: 1800 VAC or 2500 VDC, 1 x MOPP
  Output to Earth: 1800 VAC or 2500 VDC, 1 x MOPP
  Medical BF rated
- End user installable modules (no hi-pot or safety certifications required to install modules)
- 5-year manufacture's warranty

SAFETY

- IEC/EN 62368-1
- UL 62368-1, CSA C22.2 No. 62368-1
- IEC/EN 60601-1
- ANSI/AAMI ES 60601-1
  CAN/CSA-C22.2 No 60601-1
- CE mark (LVD+RoHS)
- CB certicates and report
- CCC (CQC optional)

RoHS

PMBus® Power Management. Defined.

©2024 Advanced Energy Industries, Inc.

ELECTRICAL SPECIFICATIONS

Input		
Case Model	NP05W1A	NP08W1A
Orderable Part Number	83-105-0001W	83-108-0001W
Number of Slots	5	8
Max Power	Low line: 1200 W; High line: 2400 W	Low line: 2000 W; High line: 4000 W
Power Density	17.45 W/in³	18.18 W/in³
AC Input Range	Low line 1-phase: 90 to 132 VAC; High line 1-phase: 180 to 264 VAC	
AC Input Frequency	47 to 440 Hz	
Turn-on Voltage	87 VAC +/- 2%	
Turn-off Voltage	81 VAC +/- 2%	
Max Inrush Current[1]	80 A	
Max Input Current	27 A	
Crest Factor	1.1 to 1.5	
Power Factor	0.99 at full load and nominal line	
Harmonic Distortion	Meets EN 61000-3-2	
Line Interruption	Meets SEMI F47-0706, 53, 58, S14 at nominal input voltages and full load condition	
Input Leakage Current[2] - Industrial	< 2.5 mA	
Input Leakage Current[2] - Medical BF	Earth (normal condition) < 0.5 mA Earth (single fault condition) < 1.0 mA Touch/Patient (normal condition) < 0.1 mA Touch/Patient (single fault condition) < 0.5 mA	
Hold-up Time	20 ms minimum, additional holdover storage with optional HUP module[3]	
Ride-through Time	20 ms minimum, additional holdover storage with optional HUP module[3]	
Input Protection	Internal fuse on all input lines (not user serviceable)	
Input Over Voltage Protection	Up to 115% of nominal input without damage	
Isolation	Input to Output: 5000 VAC or 7000 VDC, 2 x MOPP Input to Earth: 1800 VAC or 2500 VDC, 1x MOPP	
Efficiency[4]	90% typical (Contact support for for efficiency curve for a configured model)	
Standby Output	5 V/2 A	

Note 1 - Any additional inrush current surges or spikes in the form of AC cycles or multiple AC cycles greater than 10 ms, and less than 150 ms, must not exceed 25 A peak. Short pulses (<300 µS) caused by X caps are not considered.
Note 2 - The specification is not applicable for 400 Hz (+/-10%) input frequency operation.
Note 3 - Consult with AE for the availability of the HUP module.
Note 4 - Tested with 1-phase NP08W1A case at 240 VAC input and populated with 8 x 48 V modules . 5 V standby at no load.

ELECTRICAL SPECIFICATIONS

1 Slot Single Output Modules					
Model[1]	1S 0005M/L	1S 0012M/L	1S 0015M/L	1S 0024M/L	1S 0048M/L
Voltage Source (VS) Mode					
Nominal Output Voltage	5 V	12 V	15 V	24 V	48 V
Orderable Part Numbers[1]	83-011-0005M/L	83-011-0012M/L	83-011-0015M/L	83-011-0024M/L	83-011-0048M/L
Output Voltage Range	1.0 to 6.0 V	2.4 to 14.4 V	3.0 to 18.0 V	4.8 to 28.8 V	9.6 to 57.6 V
Output Current Range	0 to 56 A	0 to 41.6 A	0 to 33.3 A	0 to 20.8 A	0 to 10.4 A
Current Source (CS) Mode					
Rated Output Current	56 A	33.3 A	26.6 A	16.6 A	8.3 A
Output Current Range	2.8 to 56 A	1.66 to 41.6 A	1.33 to 33.3 A	0.83 to 20.8 A	0.42 to 10.4 A
Minimum Output Voltage	1.0 V	2.4 V	3.0 V	4.8 V	9.6 V
Max Output Power	280 W	400 W	400 W	400 W	400 W
Max Capacitance for Dynamic Loading	820 µF	470 µF	220 µF	220 µF	220 µF
Module Connected in Parallel	Up to 8 modules with active current sharing error of +/-5% from half load to full load.				
Remote Sense	All outputs have remote sense capability. Compensate for up to 2% of Vnom drop in each load line.				
Under-voltage Protection (UVP)	Capable of detecting an under-voltage condition in which the output voltage does not achieve its setpoint voltage.				
Over-voltage Protection (OVP)	110% to 120% of Vout-target, latch off mode. Cleared by input voltage reset or clear faults digital register.				
Over-current Protection (OCP)	Latch vs CC				
Short Circuit Protection (SCP)	All outputs protected from continuous output shorted condition (no damage or reliability issues).				

Note 1 - Suffix M for Medical BF Rated application, and L for Industrial Low Noise application.

ELECTRICAL SPECIFICATIONS

Output - Adjustable Voltage Source	via Digital Command	via Analog Signal
Programming Accuracy	+/- 1% of Vset or Vnom, whichever is greater	+/- 1.5% of Vset or Vnom, whichever is greater
Monitoring Accuracy	+/- (1% of Vset + 1% of Vnom)	+/- (1.5% of Vset + 1.5% of Vnom)
Line Regulation	+/-1% of Vnom	
Load Regulation	+/-1% of Vnom	
Ripple & Noise @ 20 MHz BW (Pk-to-Pk)	1% of Vset or Vnom, whichever is greater Measured with a 0.1 µF ceramic capacitor in parallel with a 10 µF tantalum or low ESR E-cap.	
Ripple & Noise @ 20 MHz BW (RMS)	0.1% of Vset or Vnom or 10 mV, whichever is greater Measured with a 0.1 µF ceramic capacitor in parallel with a 10 µF tantalum or low ESR E-cap.	
Common Mode Ripple/Noise (Pk-to-Pk) @ 10 Hz to 70 MHz BW[1]	0.1% of Vset or Vnom or 10 mV, whichever is greater Across a 100 Ohm resistor between both DC outputs, including ground, at the DC power connector and chassis ground. Use FET probe such as Tektronix model P6046 or equivalent.	
Transient Loading	Minimum dynamic load: 20% of rated output current Maximum dynamic loading step: 50% step load @ 1 A/µs Voltage deviation: +/- 7.5% of Vset or Vnom which is greater (for 5V output models); +/- 5% of Vset or Vnom (for other module variants)	
Turn-on Output Voltage Overshoot	+7.5% of Vset or Vnom, whichever is greater (5V output models) +5% of Vset or Vnom, whichever is greater (other output models)	
Turn-off Output Voltage Undershoot	-7.5% of Vset or Vnom, whichever is greater (5V output models) -5% of Vset or Vnom, whichever is greater (other output models)	
Adjustable Output Voltage Risetime	20 to 100 ms	

Note 1 - For Low Noise Module Variants only. Refer to Common Mode Ripple & Noise test setting and setup.

Output - Adjustable Current Source	via Digital Command	via Analog Signal
Programming Accuracy	+/- 1% of Iset or Irated, whichever is greater	+/- 2% of Iset or Irated, whichever is greater
Monitoring Accuracy	+/- (1% of Iset + 1% of Irated)	+/- (2% of Iset + 2% of Irated)
Line Regulation	+/- 2% of Irated	
Load Regulation	+/- 2% of Irated	
Ripple & Noise @ 20 MHz BW (RMS)	+/- (1% of Iset + 1% of Irated) Measured with a 0.1 µF ceramic capacitor in parallel with a 10 µF tantalum or low ESR E-cap.	
Turn-on Output Voltage Overshoot	+5% of Iset or Irated, whichever is greater	
Turn-off Output Voltage Undershoot	-5% of Iset or Irated, whichever is greater	
Adjustable Output Current Risetime	20 to 100 ms	

ENVIRONMENTAL SPECIFICATIONS

Operating Temperature	0°C to +50°C ambient: full performance; -20°C startup; 50°C to +70°C ambient: output power derated: 70°C @ sea level - 85% derated output power 50°C @ 3000 meters above sea level - 90% derated output power 70°C @ 3000 meters above sea level - 75% derated output power
Storage Temperature	-40°C to +85°C
Operating Humidity	20% to 90% non condensing
Storage Humidity	10% to 95% non condensing
Operating Altitude	Up to 3,000 meters above sea level
Storage Altitude	Up to 9,144 meters above sea level
Vibration	Operating Sinusoidal Vibration MIL-STD-810G, method 514.6, procedure I, category 4-11: 10 to 2000 Hz 6.0 Grms 30 mins three axis (Non Operating); 10 to 500 Hz 4.22 Grms 30 mins three axis (operating); 1G 5 to 500 Hz sine vib 1 oct/min (Sine Vib) Operating Random Vibration: IPC-9592B Class 1 Non-Operating Vibration (Packaged): IPC-9592B Class 1; MIL-STD-810G, Method 514.6, Procedure 1, Category 7, Table 514.6C-VII General Exposure
Shock	MIL-STD-810G, method 516.6, Procedure I and II: 30 Grms 26ms square wave pulse (non operating) 40 Grms 6ms half sine pulse (operating)
Shipping and Handling	NSTA for <100 lbs; MIL-STD-2073-1 >100 lbs
Cooling and Audible Noise	<65 dBA with 80% load @ 30°C at nominal input voltage with Smart Fan algorithm to be optimized based on module and case thermal sensors. When modules are inhibited via software control, the fan speed is reduced to minimum and acoustic noise is <46 dBA. < 80 dBA continuous for 24 hours
Ingress Protection	Fan Cooled, IP20
MTBF	Calculated: 200,000 hours, Telcordia specifications @ 25°C ambient at full load, nominal input line AC Demonstrated: > 500,000 hours
Pollution Degree	2, with optional conformal coating
RoHS Compliance	Yes

ORDERING INFORMATION

Case Code		Module Options Codes First - # of Slots Second - Type Third - Voltage Code Forth - Option Code		Case Option Codes First - Case Options Second - Configuration Code		Parallel/ Series Code Separate multiple codes with "&"		Software Code		Communication Bus		Modification Code
NPWWXYZ	-	XYZO	-	XY	-	XYZ	-	A	-	0	-	XXX
WW = Number of Slots - Case Size 05 = 5 Slots 08 = 8 Slots **X = Input Voltage Range** W = Wide range 90 to 264 VAC H = High line L = Low line **Y = Input Phase** 1 = Single phase 3 = Three phase **Z = Input Line** A = AC input D = DC input		**X = Number of Slots for Module** 1 = 1 slot, single O/P **Y = Module Type** L = Low Noise M = Medical **Z = Voltage Code(s)** See table **O = Option Codes:** 0 = DVS, Module ON 1 = DCS, Module ON 2 = AVS, Module ON 3 = ACS, Module ON 4 = DVS, Module OFF 5 = DCS, Module OFF 6 = AVS, Module OFF 7 = ACS, Module OFF Z = Option defined in MOD-I		**X = Case Options** 0 = No options 1 = Reverse air Z = See MOD-I **Y = Configuration Code** 0 = Shipped from AEI cases/modules C = Shipped configured, modules installed		**See Table** 000 = No series/parallel		A = Standard B = Non standard voltage		0 = Standard MODBUD RTU Z = See MOD		Advanced Energy assigned code to track modification made from the standard design CC = Conformal coating RG = Ruggedized

Chassis Options

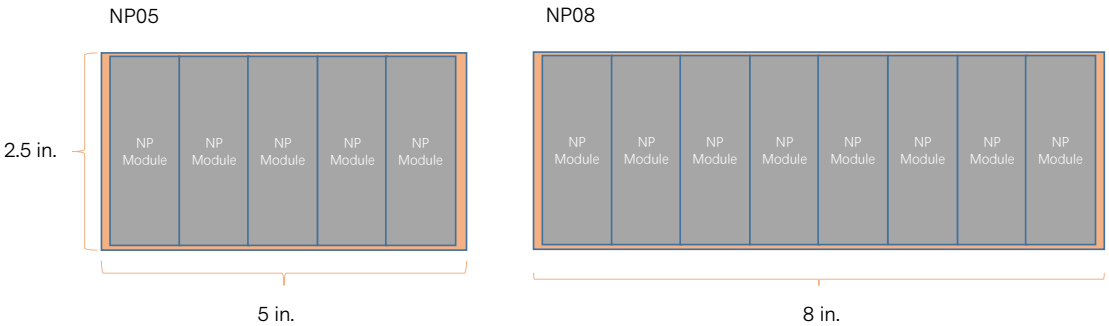

ORDERING INFORMATION

Output Voltage Code Table

Voltage	Code	Voltage	Code	Voltage	Code	Voltage	Code
2 V	A	6 V	H	18 V	O	42 V	V
2.2 V	B	8 V	I	20 V	P	48 V	W
3 V	C	10 V	J	24 V	Q	54 V	X
3.3 V	D	11 V	K	28 V	R	60 V	Y
5 V	E	12 V	L	30 V	S	-	-
5.2 V	F	14 V	M	33 V	T	-	-
5.5 V	G	15 V	N	36 V	U	-	-

Parallel and Series Connection Table

Parallel and series connections are indicated by identifying the first slot number followed by the number of slots that will be connected together followed by a P or S to indicate parallel or series connections.
Examples: To connect module slots 1 & 2 in parallel, the code will be 12P. To connect module slots 1-8 in parallel, the code will be 18P. To connect slots 3 & 4 in series, the code is 32S.
To specify multiple connections, use an "&". Example: 12P&32P&54S.

Case	Starting Slot	#Slots Connected Across	Parallel/Series	Module Slots Connected
NP05/08	1	2	P/S	1&2
NP05/08	2	2	P/S	2&3
NP05/08	3	2	P/S	3&4
NP05/08	4	2	P/S	4&5
NP08	5	2	P/S	5&6
NP08	6	2	P/S	6&7
NP08	7	2	P/S	7&8
NP05/08	1	3	P/S	1&2&3
NP05/08	2	3	P/S	2&3&4
NP05/08	3	3	P/S	3&4&5
NP08	4	3	P/S	4&5&6
NP08	5	3	P/S	5&6&7
NP08	6	3	P/S	6&7&8
NP05/08	1	4	P/S	1&2&3&4
NP05/08	2	4	P/S	2&3&4&5
NP08	3	4	P/S	3&4&5&6
NP08	4	4	P/S	4&5&6&7
NP08	5	4	P/S	5&6&7&8
NP05/08	1	5	P/S	1&2&3&4&5
NP08	2	5	P/S	2&3&4&5&6
NP08	3	5	P/S	3&4&5&6&7
NP08	4	5	P/S	4&5&6&7&8
NP08	1	6	P/S	1&2&3&4&5&6
NP08	2	6	P/S	2&3&4&5&6&7
NP08	3	6	P/S	3&4&5&6&7&8
NP08	1	7	P/S	1&2&3&4&5&6&7
NP08	2	7	P/S	2&3&4&5&6&7&8
NP08	1	8	P/S	1&2&3&4&5&6&7&8

ORDERING INFORMATION

Case Model	Case Orderable Part Number	Description	Status
NP05W1A	83-105-0001W	2400W Case, 1-Phase	Released
NP08W1A	83-108-0001W	4000W Case, 1-Phase	Released

Module Model	Module Orderable Part Number	Description	Status
1S 0005M	83-011-0005M	1 Slot 5V Medical, 280W	Released
1S 0012M	83-011-0012M	1 Slot 12V Medical, 400W	Released
1S 0015M	83-011-0015M	1 Slot 15V Medical, 400W	Released
1S 0024M	83-011-0024M	1 Slot 24V Medical, 400W	Released
1S 0048M	83-011-0048M	1 Slot 48V Medical, 400W	Released
1S 0005L	83-011-0005L	1 Slot 5V Low Noise, 280W	Released
1S 0012L	83-011-0012L	1 Slot 12V Low Noise, 400W	Released
1S 0015L	83-011-0015L	1 Slot 15V Low Noise, 400W	Released
1S 0024L	83-011-0024L	1 Slot 24V Low Noise, 400W	Released
1S 0048L	83-011-0048L	1 Slot 48V Low Noise, 400W	Released

Orderable Part Number	Series & Parallel Kits (busbars, cables & screws)	Status
83-778-002	2x 1-slot modules parallel kit	Released
83-778-003	3x 1-slot modules parallel kit	Released
83-778-004	4x 1-slot modules parallel kit	Released
83-778-005	5x 1-slot modules parallel kit	Released
83-778-006	6x 1-slot modules parallel kit	Released
83-778-007	7x 1-slot modules parallel kit	Released
83-778-008	8x 1-slot modules parallel kit	Released
83-778-009	2x 1-slot modules series kit	Released
83-778-010	3x 1-slot modules series kit	Released
83-778-011	4x 1-slot modules series kit	Released
83-778-012	5x 1-slot modules series kit	Released
83-778-013	6x 1-slot modules series kit	Released
83-778-014	7x 1-slot modules series kit	Released
83-778-015	8x 1-slot modules series kit	Released

Orderable Part Number	Signal/Communication Connectors	Status
750-012298-0000	J1 SIGNAL ASSY,HARN,14,14 WAY COMMS CONNECTOR	Released
83-788-006	RJ45 MODBUS programming cable	Released

Orderable Part Number	Communication Adapters	Status
83-200-001	PMBus and CANBus	Released
83-200-002	Ethernet MODBUS TCP	Released

CASE MECHANICAL DRAWINGS

NP05W1A Case (Unit: mm)

Case Weight: 3.3 lbs (1.5 kg)

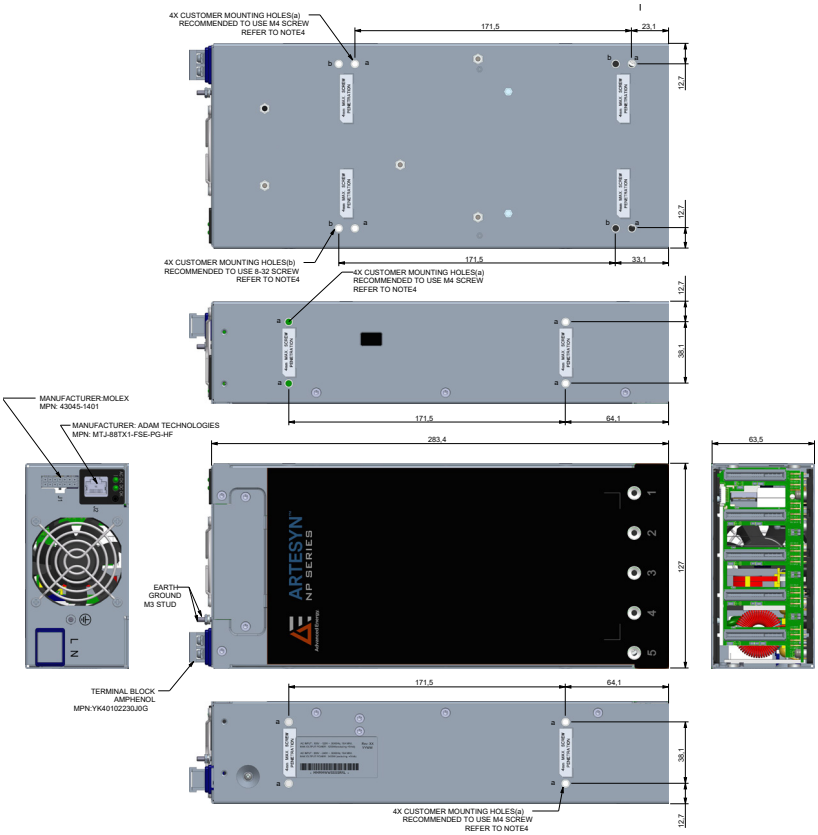





NOTES: 1. PARTS MUST BE COMPLETELY ASSEMBLED.
2. REFER TO BOM FOR UPDATED PART NUMBERS.
3. UNLESS OTHERWISE SPECIFIED, APPLIED TORQUE SHOULD BE PER WORKMANSHIP STANDARDS 920-000310-0000.
4. CUSTOMER MOUNTING -3 SIDES M4, BOTTOM ALSO INCLUDES 8-32 MOUNTING HOLES. SCREW MAX. PENETRATION IS 0.155"(4.0mm). SCREW MAX. TORQUE: 5 IN-LBS.(0.57 N-m).

CASE MECHANICAL DRAWINGS

NP08W1A Case (Unit: mm)

Case Weight: 7 lbs (3.2 kg)

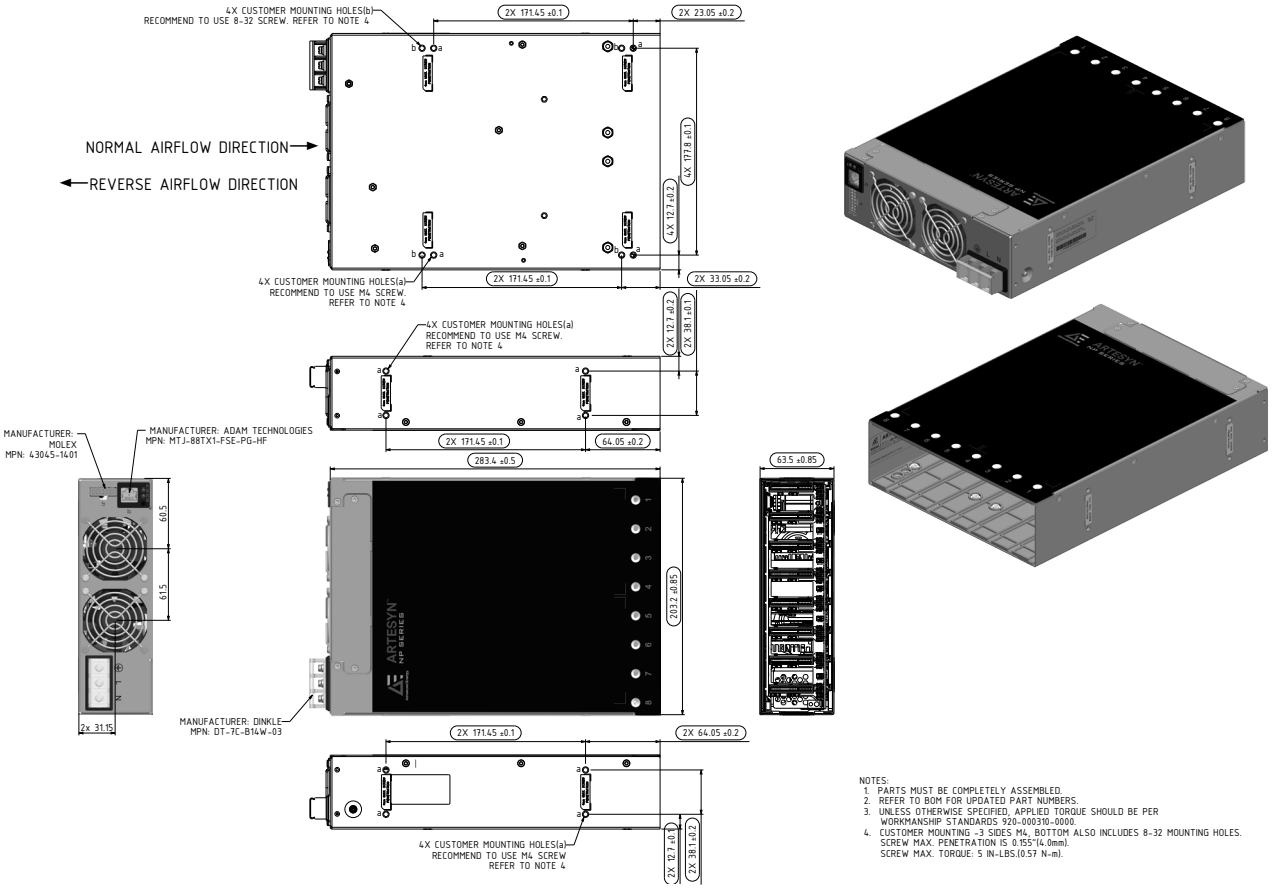

NOTES:
1. PARTS MUST BE COMPLETELY ASSEMBLED.
2. REFER TO BOM FOR UPDATED PART NUMBERS.
3. UNLESS OTHERWISE SPECIFIED, APPLIED TORQUE SHOULD BE PER WORKMANSHIP STANDARDS 920-000310-0000.
4. CUSTOMER MOUNTING -3 SIDES M4, BOTTOM ALSO INCLUDES 8-32 MOUNTING HOLES. SCREW MAX. PENETRATION IS 0.155"(4.0mm). SCREW MAX. TORQUE: 5 IN-LBS.(0.57 N-m).

MECHANICAL DRAWINGS - MODULE

1 Slot Single Output Modules (Unit: mm)

Maximum Module Weight: 0.5 lbs (0.226 kg)

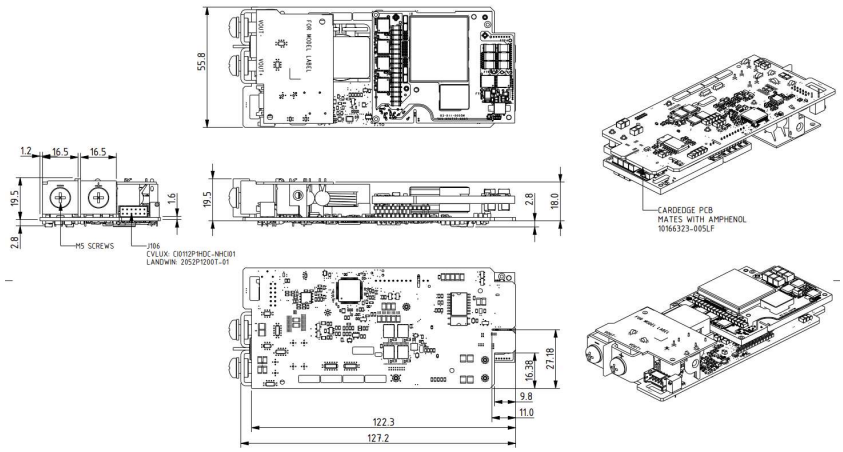

1 Slot Single Output Low Noise Modules (Unit: mm)

Maximum Module Weight: 0.4lbs (0.2kg)

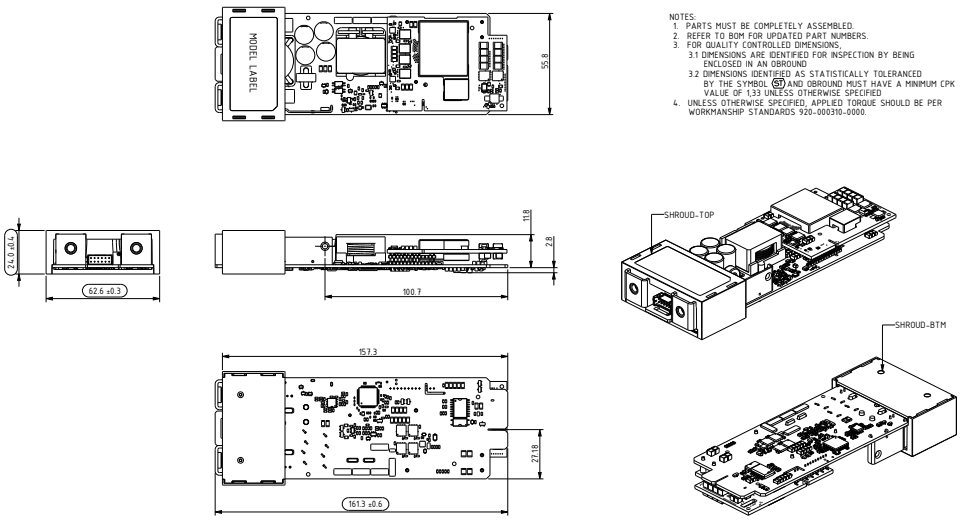

CASE INTERFACE

NP08 Front Panel

(Input, Signal Connector and LED Locations)



Conditions	AC OK LED	DC OK LED
AC Present, Outputs Inhibited (Case Global Inhibit), Case & Module bootloading	ON	BLINKING
AC Present, Outputs Inhibited (Module Isolated Inhibit)	ON	OFF
AC Present, Outputs Enabled	ON	ON
Output OCP / OVP / Fan Fault	ON	OFF
AC Not Present	OFF	OFF

Case J1 Control & Signals Connector

Pin #	Signal Name	Description	Pin #	Signal Name	Description
1	G_ACOK_E	Active HIGH signal, indicates the input supply voltage is within operational range of the power supply	8	G_ACOK_C	Active LOW signal, indicates the input supply voltage is within specified limits
2	G_PGOOD_E	Active HIGH signal, indicates the module output is within regulation band	9	G_PGOOD_C	Active LOW signal, indicates the main output voltage is within specified limits
3	INH0	Global Inhibit Logic "0" signal functions to turn-off all modules simultaneously. Internally pulled-up to COMS_5V via 10k Ohm resistor	10	INH1	Global Inhibit Logic "1" signal functions to turn-off all modules simultaneously. Internally pulled-down to ISO_RTN via 4.7k Ohm resistor
4	ISO_RTN1	Isolated Supply Return	11	ISO_RTN1	Isolated Supply Return
5	5V_EXT	Isolated 5 V Logic Supply	12	ISO_RTN1	Isolated Supply Return
6	5V_STBY	5 V Stand-by	13	5V_STBY_RTN	5 V Stand-by Return
7	ISO_RTN1	Isolated Supply Return	14	ISO_RTN1	Isolated Supply Return

Note - The mating connector is Molex Micro-Fit 3.0 43025 0430251400 14 position.

Case J2 ConnectedPower Bus

Pin #	Signal Name	Description	Pin #	Signal Name	Description
1	RS485 A	Communication lines for RS485 MODBUS protocol	5	ISO_RTN1	Isolated Supply Return
2	RS485 B	Communication lines for RS485 MODBUS protocol	6	ISO_RTN1	Isolated Supply Return
3	ISO_RTN1	Isolated Supply Return	7	+5 V_Logic_Supply	Isolated 5 V Logic Supply
4	ISO_RTN1	Isolated Supply Return	8	+5 V_Logic_Supply_ Return	Isolated Supply Return

MODULE INTERFACE

NP08 Rear View

Output, Signal Connectors and LEDs

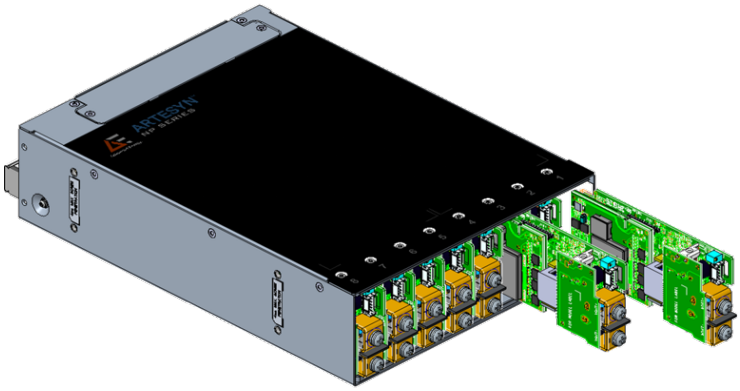

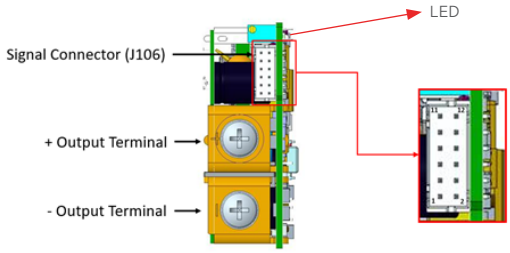

Module Conditions	LED
Module Inhibited, Module Bootloading	Blinking Green
Module Enabled	Solid Green
Module Faulted	Solid Red
Module Faulted	Solid Amber

Module J106 Signal Connector		
Pin #	**Signal Name**	**Description**
1	ISO_M_INHIBIT	Isolated signal to inhibit the module output
2	ISO_M_INHIBIT_RTN	Ground reference for ISO_M_INHIBIT signal
3	ISO_POWER_GOOD	Isolated signal that indicates module output voltage or current is within regulation
4	ISO_POWER_GOOD_RTN	Ground reference for ISO_POWER_GOOD signal
5	0-10_VI_PROG	Used to control the output voltage by applying between 0 to 10 V to this pin. This pin will function when the module is configured to Analog Voltage Source (AVS) mode Used to control the output current by applying between 0 to 10 V to this pin. This pin will function when the module is configured to Analog Voltage Source (ACS) mode
6	0-5_VI_PROG	Used to control the output voltage by applying between 0 to 5 V to this pin. This pin will function when the module is configured to Analog Voltage Source (AVS) mode Used to control the output current by applying between 0 to 5 V to this pin. This pin will function when the module is configured to Analog Voltage Source (ACS) mode
7	VI_TRIM_EN#	Connecting this pin to D_RTN will enable the trimmer potentiometer. This pin will function when the module is configured to Digital Voltage Source (DVS) or Digital Current Source (DCS) modes
8	D_RTN	Ground reference for 0-10_VI_PROG & 0-5_VI_PROG signals
9	ISHARE	0.4 to 8.4 V voltage signal for active current sharing
10	ISHARE_RTN	Ground reference for ISHARE signal
11	RS+	Signal used for module output voltage positive remote sense
12	RS-	Signal used for module output voltage negative remote sense

Note - The mating connector is Landwin 2050S1200 with pin 2053T021V.

ABOUT ADVANCED ENERGY

Advanced Energy (AE) has devoted more than four decades to perfecting power for its global customers. AE designs and manufactures highly engineered, precision power conversion, measurement and control solutions for mission-critical applications and processes.

Our products enable customer innovation in complex applications for a wide range of industries including semiconductor equipment, industrial, manufacturing, telecommunications, data center computing, and medical. With deep applications know-how and responsive service and support across the globe, we build collaborative partnerships to meet rapid technological developments, propel growth for our customers, and innovate the future of power.

PRECISION | POWER | PERFORMANCE | TRUST

For international contact information,
visit advancedenergy.com.

powersales@aei.com (Sales Support)
productsupport.ep@aei.com (Technical Support)
+1 888 412 7832

Specifications are subject to change without notice. Not responsible for errors or omissions. ©2024 Advanced Energy Industries, Inc. All rights reserved. Advanced Energy®, AE® and Artesyn™ are U.S. trademarks of Advanced Energy Industries, Inc.

ENG-NP-235-01 11.22.24