ADH700-48S50-6LS

700 Watts
Half-brick Converter



Total Power: 700 Watts
Input Voltage: 36 to 75 Vdc
# of Outputs: Single

Special Features

- Delivering up to 14A output
- Ultra-high efficiency 93.5% typ. at 100% load
- Wide input range: 36V ~ 75Vdc
- Excellent thermal performance
- No minimum load requirement
- Basic isolation
- High power density
- Low output noise
- RoHS 6 compliant
- Remote control function
- Remote output sense
- Trim function: 50% ~114%
- Input under voltage lockout
- Output over current protection
- Output short circuit protection
- Output over voltage protection
- Over temperature protection
- Industry standard half-brick

Safety

IEC/EN/UL/CSA 62368
CE Mark
UL/TUV
Materials meet UL94, V-0 flammability rating
EN55032 Class B with external filter

Product Descriptions

The ADH700-48S50-6LS is a single output DC-DC converter with standard half-brick outline and pin configuration. It delivers up to 14A output current with 50V output voltage. Ultra-high 93.5% efficiency and excellent thermal performance makes it an ideal choice for use in datacom and telecommunication applications. And baseplate operating temperature up to 100 ^{O}C.

Applications

Telecom/ Datacom

ARTESYN™
EMBEDDED TECHNOLOGIES

Model Numbers

Standard	Output Voltage	Structure	Remote ON/OFF logic	RoHS Status
ADH700-48S50-6LS	50Vdc	Baseplate threaded mounting hole	Negative	R6
ADH700-48S50P-6LS	50Vdc	Baseplate threaded mounting hole	Positive	R6

Ordering information

ADH700	-	48	S	50	P	-	6	L
①		②	③	④	⑤		⑥	⑦

①	Model series	ADH: series name, 700: output power 700W
②	Input voltage	48: 36V ~ 75V input range, rated input voltage 48V
③	Output number	S: single output
④	Rated output voltage	50: 50V output
⑤	Remote ON/OFF logic	Default: negative logic; P: positive logic
⑥	Pin length	-6: 3.8mm
⑦	RoHS status	L: RoHS R6

Options

None

Electrical Specifications

Absolute Maximum Ratings

Stress in excess of those listed in the "Absolute Maximum Ratings" may cause permanent damage to the power supply. These are stress ratings only and functional operation of the unit is not implied at these or any other conditions above those given in the operational sections of this TRN. Exposure to any absolute maximum rated condition for extended periods may adversely affect the power supply's reliability.

Table 1. Absolute Maximum Ratings:

Parameter	Model	Symbol	Min	Typ	Max	Unit
Input Voltage Operating -Continuous Non-operating 100ms	All	$V_{IN,DC}$	 - -	 - -	 80 100	 Vdc Vdc
Maximum Output Power	All	$P_{O,max}$	-	-	700	W
Isolation Voltage[1] Input to output Input to metal Output to metal	All		 - - -	 - - -	 2250 1500 500	 Vdc Vdc Vdc
Ambient Operating Temperature	All	T_A	-40	-	+85	^{O}C
Operating Baseplate Temperature	All	$T_{Baseplate}$	-40	-	+100	^{O}C
Storage Temperature	All	T_{STG}	-55	-	+125	^{O}C
Voltage at remote ON/OFF pin	All		-0.3	-	15	Vdc
Humidity (non-condensing) Operating	All		 -	 -	 95	 %

Note 1 - 1mA for 60s,slew rate of 1500V/10s.

Input Specifications

Table 2. Input Specifications:

Parameter		Conditions[1]	Symbol	Min	Typ	Max	Unit
Operating Input Voltage, DC		All	$V_{IN,DC}$	36	48	75	Vdc
Input Under-voltage Lockout	Turn-on Voltage Threshold	$I_O = I_{O,max}$	$V_{IN,ON}$	32	-	35	Vdc
	Turn-off Voltage Threshold	$I_O = I_{O,max}$	$V_{IN,OFF}$	31	-	34	Vdc
	Lockout Voltage Hysteresis	$I_O = I_{O,max}$		1	-	3	Vdc
Maximum Input Current		$V_{IN,DC}$ = 36Vdc, $I_O = I_{O,max}$	$I_{IN,max}$	-	-	21.5	A
Input Reflected Ripple Current		Through 12uH inductor; Figure 1			20		mA
Recommended Input Fuse		Fast blow external fuse is recommended		-	-	30	A
Recommended External Input Capacitance		Low ESR capacitor is recommended	C_{IN}	470	-	-	uF
Operating Efficiency		T_A=25 ^{O}C $I_O = 100\%I_{O,max}$ $I_O = 50\%I_{O,max}$ $I_O = 20\%I_{O,max}$	η	91.5 93 89.5	93.5 94.5 91.5	- - -	% % %

Note 1 - T_A = 25 ^{O}C, airflow rate = 400 LFM, Vin = 48Vdc, nominal Vout unless otherwise noted. All electrical specification is guaranteed above 35V input voltage after module turn on.

Output Specifications

Table 3. Output Specifications:

Parameter		Condition[1]	Symbol	Min	Typ	Max	Unit
Factory Voltage Set Point (Standard option)		$V_{IN,DC}$ = 48Vdc I_O = 50%$I_{O,max}$	V_O	49.5	50.0	50.5	Vdc
Output Voltage Line Regulation		All	$\pm V_O$	-	-	0.5	%
				-	-	250	mV
Output Voltage Load Regulation		All	$\pm V_O$	-	-	0.5	%
				-	-	250	mV
Output Voltage Temperature Regulation		All	$\%V_O$	-	-	0.02	%/^{O}C
Total Output Voltage Range		Over sample, line, load, temperature& life		48.5	50.0	51.5	Vdc
Output Voltage Ripple and Noise, pk-pk		Measure with a 0.68uF output capacitor to 20MHz bandwidth	V_O	-	90	-	mV_{PK-PK}
Output Current		All	I_O	0	-	14	A
Output DC Current-limit Inception[2]		All	I_O	14.5	-	20	A
V_O Load Capacitance[3]		All	C_O	470	1000	3300	uF
V_O Dynamic Response	Peak Deviation Settling Time	25%~50%~25% $I_{O,max}$ slew rate = 0.1A/us	$\pm V_O$ T_s	- -	470 0	764 26	mV uS
	Peak Deviation Settling Time	50%~75%~50% $I_{O,max}$ slew rate = 0.1A/us	$\pm V_O$ T_s	- -	477 0	780 26	mV uS
Turn-on transient	Rise time	I_O=$I_{O,max}$	T_{rise}	-	180	202	mS
	Turn-on delay time	I_O=$I_{O,max}$	$T_{turn-on}$	-	90	95	mS
	Turn-on overshoot	I_O = 0		-	-	5	%Vo
Switching frequency		All	f_{SW}	-	240	-	kHz
Remote ON/OFF control (positive logic)	Off-state voltage			-0.3	-	0.8	Vdc
	On-state voltage			2.4	-	15	Vdc
Remote ON/OFF control (negative logic)	Off-state voltage			2.4	-	15	Vdc
	On-state voltage			-0.3	-	0.8	Vdc
Output over-voltage protection[4]		All		60	-	70	Vdc
Output voltage trim range		All	V_O	25	-	57	Vdc
Output over-temperature protection[5]		All	T	105	115	125	^{O}C

Output Specifications

Table 3. Output Specifications, con't:

Parameter	Condition	Symbol	Min	Typ	Max	Unit
Over-temperature hysteresis	All	T	5	-	-	^{O}C
Calculated MTBF	Telcordia SR-332-2006; 80% load; 300LFM, T_A=40 ^{O}C		-	1.5	-	10^6 h

Note 1 - T_A = 25 ^{O}C, airflow rate = 400 LFM, Vin = 48Vdc, nominal Vout unless otherwise noted.
Note 2 - Hiccup: auto-restart when over-current condition is removed.
Note 3 - High frequency and low ESR is Recommended.
Note 4 - Hiccup: auto-restart when over-voltage condition is removed.
Note 5 - Auto recovery; over-temperature protect (OTP) test point.

ADH700-48S50-6LS Performance Curves

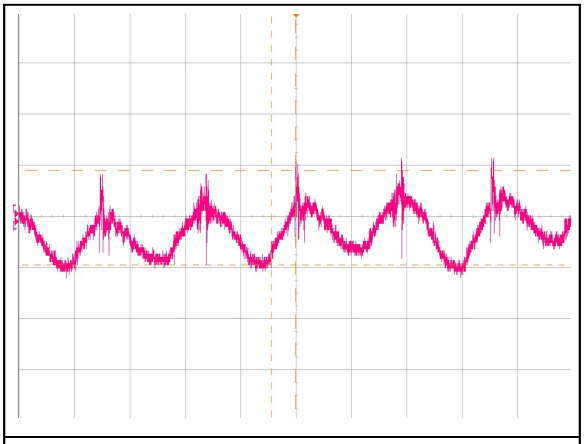

Figure 1: ADH700-48S50-6LS Input reflected Ripple Current Waveform

Ch1 : Iin (2uS/div, 10mA/div)

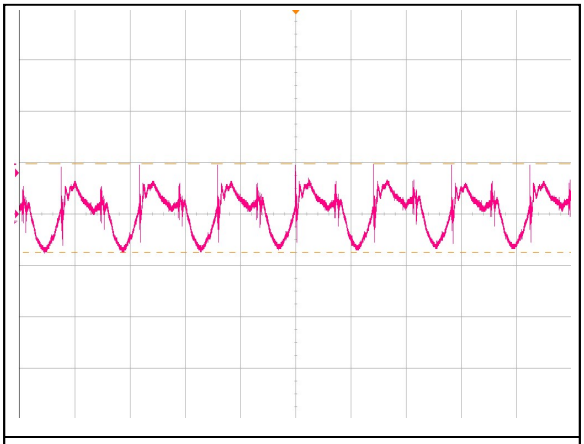

Figure 2: ADH700-48S50-6LS Ripple and Noise Measurement

Ch1 : Vo (5uS/div, 50mV/div)

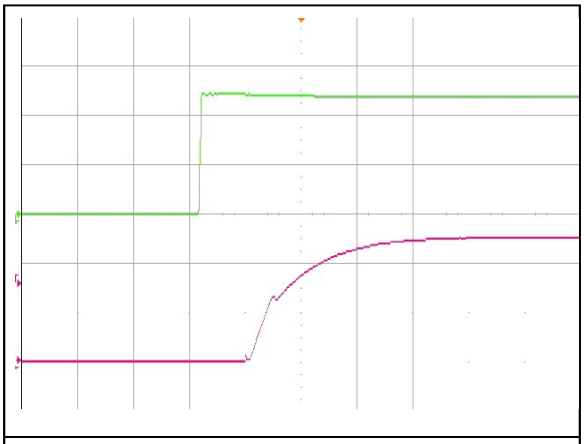

Figure 3: ADH700-48S50-6LS Output voltage startup by power on (100mS/div)

Ch 2: Vin (20V/div) Ch 4: Vo (20V/div)

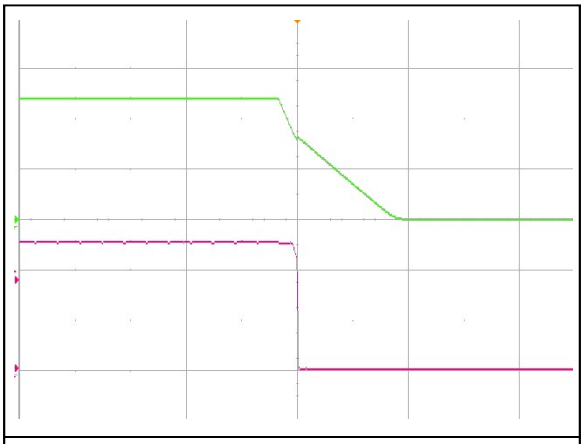

Figure 4: ADH700-48S50-6LS Output voltage shut down by power Off (50ms/div)

Ch 2: Vin (20V/div) Ch 4: Vo (20V/div)

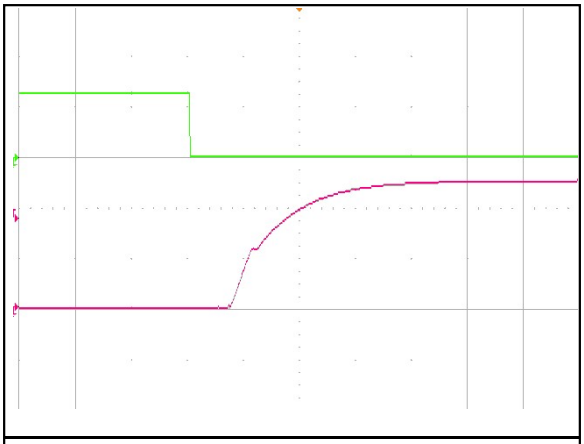

Figure 5: ADH700-48S50-6LS Output voltage startup by remote ON (100mS/div)

Ch 2: Remote ON (5V/div) Ch 4: Vo (20V/div)

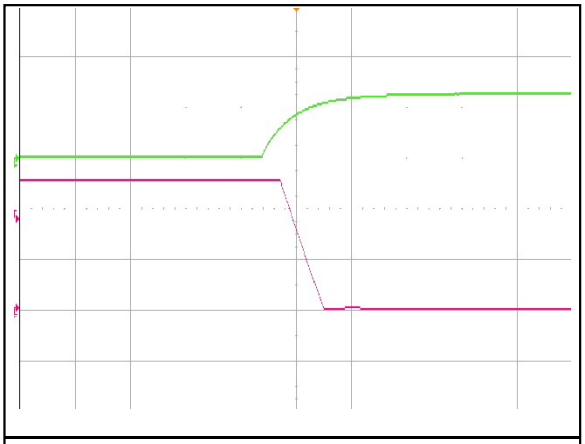

Figure 6: ADH700-48S50-6LS Output voltage shutdown by remote OFF (2mS/div)

Ch 2: Remote ON (5V/div) Ch 2: Vo (20V/div)

ADH700-48S50-6LS Performance Curves

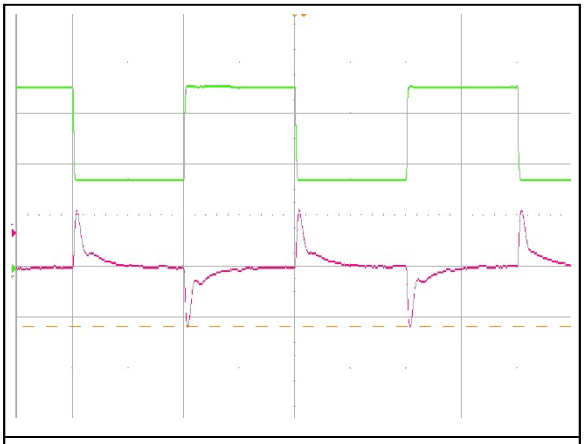

Figure 7: ADH700-48S50-6LS Transient Response (50mS/div)
25% load step(25%~50%~25%), 0.1A/us slew rate
Ch 4: Vo (500mV/div) Ch 2: Io (2A/div)

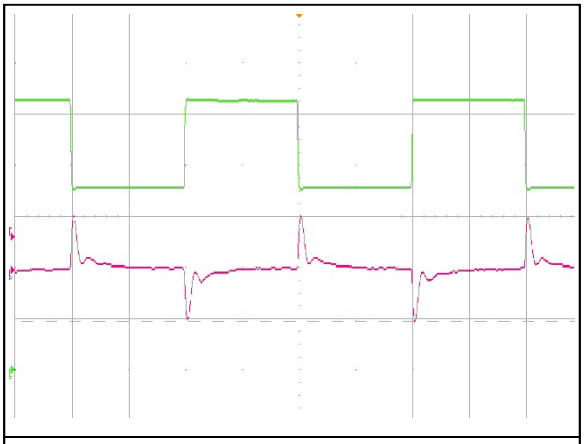

Figure 8: ADH700-48S50-6LS Transient Response (50mS/div)
25% load step(50%~75%~50%) , 0.1A/us slew rate
Ch 4: Vo (500mV/div) Ch 2: Io (2A/div)

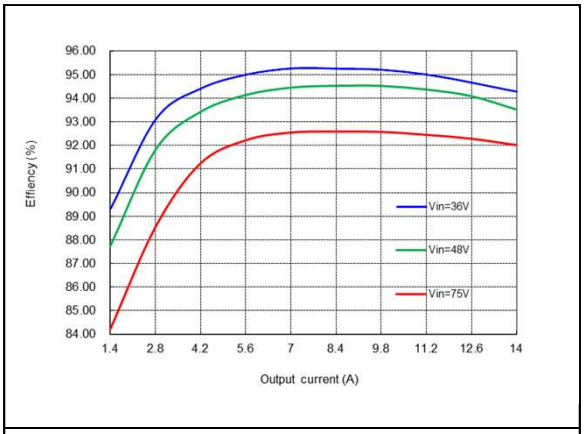

Figure 9: ADH700-48S50-6LS Efficiency Curves @ 25 °C, 400LFM, Vo=50V
Loading: Io = 10% increment to 14A

Mechanical Specifications

Mechanical Outlines

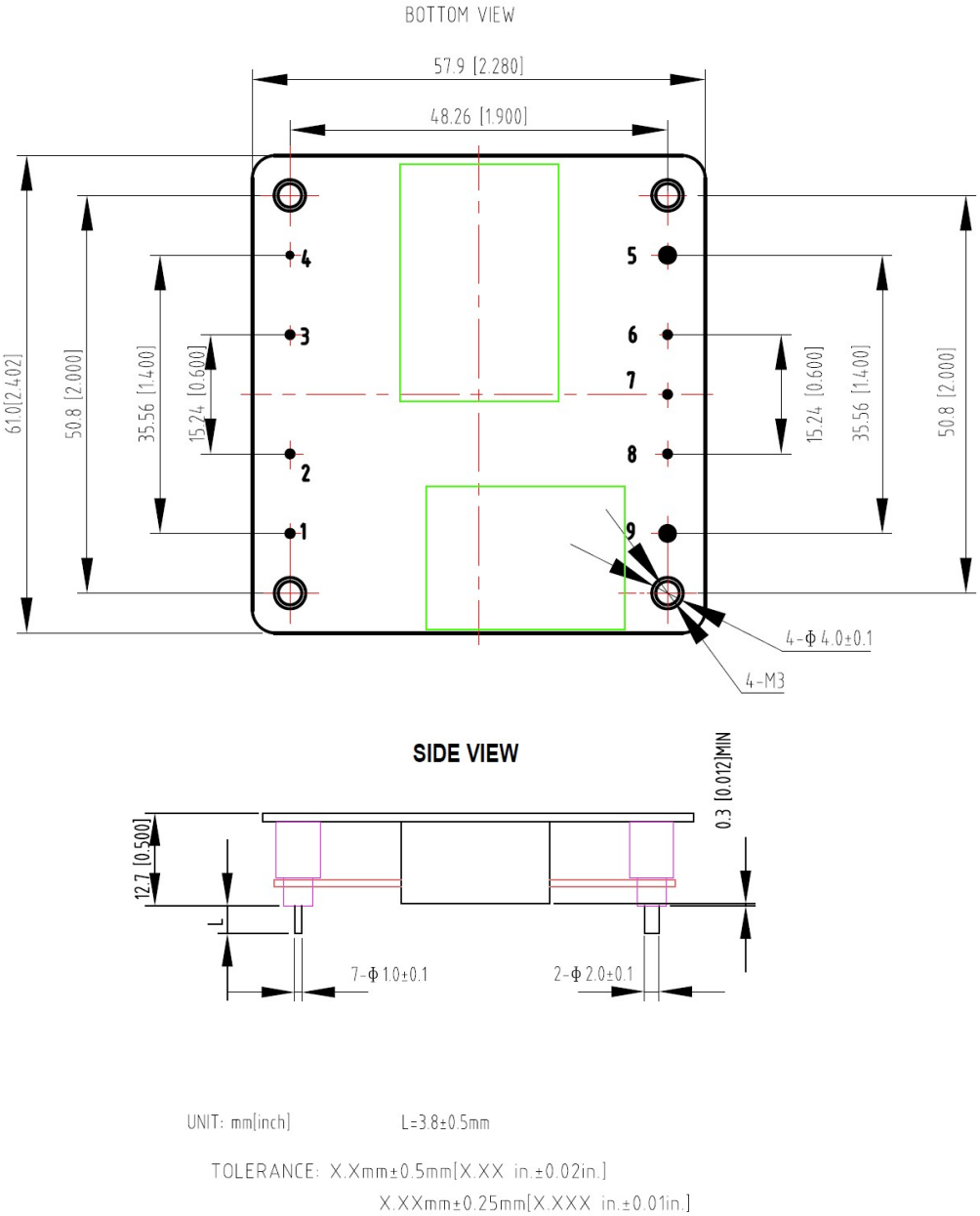

Figure 10 ADH700-48S50-6LS mechanical outlines

Note 1 - The module size is 2.4” x 2.28” x 0.5”.
Note 2 - The module weight is 87g to 87.8g.

Pin Length option

Device code suffix	L
-4	4.8mm ± 0.5mm
-6	3.8mm ± 0.5mm
-8	2.8mm ± 0.5mm
None	5.8mm ± 0.5mm

Pin Designations

Pin Number	Name	Function
1	Vin+	Positive input voltage
2	CNT	Remote ON/OFF control
3	Case	Case
4	Vin-	Negative input voltage
5	Vo-	Negative output voltage
6	S-	Negative output sense
7	Trim	Output voltage trim
8	S+	Positive output sense
9	Vo+	Positive output voltage

Environmental Specifications

EMC Immunity

ADH700-48S50-6LS power supply is designed to meet the following EMC immunity specifications:

Table 4. Environmental Specifications:

Document	Description	Criteria
EN55032, DC input port, Class B Limits with external filter	Conducted and Radiated EMI Limits, DC input port	/
IEC/EN 61000-4-2, Level 3	Electromagnetic Compatibility (EMC) - Testing and measurement techniques: Electrostatic discharge immunity test	B
IEC/EN 61000-4-4, Level 3	Electromagnetic Compatibility (EMC) - Testing and measurement techniques: Electrical Fast Transient. DC input port	B
IEC/EN 61000-4-5	Electromagnetic Compatibility (EMC) - Testing and measurement techniques: Immunity to surges - 600V common mode and 600V differential mode for DC input port	B
IEC/EN 61000-4-6, Level 2	Electromagnetic Compatibility (EMC) - Testing and measurement techniques: Continuous Conducted Interference. DC input port	A
EN61000-4-29	Electromagnetic Compatibility (EMC) - Testing and measurement techniques: Voltage Dips and short interruptions and voltage variations. DC input port	B

Criterion A: Normal performance during and after test.
Criterion B: For EFT and surges, low-voltage protection or reset is not allowed. Temporary output voltage fluctuation ceases after disturbances ceases, and from which the EUT recovers its normal performance automatically.
For Dips and ESD, output voltage fluctuation or reset is allowed during the test, but recovers to its normal performance automatically after the disturbance ceases.
Criterion C: Temporary loss of output, the correction of which requires operator intervention.
Criterion D: Loss of output which is not recoverable, owing to damage to hardware.

Recommend EMC Filter Configuration

See figure 21.

Safety Certifications

The ADH700-48S50-6LS power supply is intended for inclusion in other equipment and the installer must ensure that it is in compliance with all the requirements of the end application. This product is only for inclusion by professional installers within other equipment and must not be operated as a stand alone product.

Table 5. Safety Certifications for ADH700-48S50-6LS power supply system

Document	File #	Description
EN62368		European Requirements
IEC62368		International Requirements
UL/CSA 62368		US and Canada Requirements
CE		CE Marking
UL94		Materials meet V-0 flammability rating
TUV		International Requirements

Operating Temperature

The ADH700-48S50-6LS power supply will start and operate within stated specifications at an ambient temperature from -40 ^{O}C to 85 ^{O}C under all load conditions. The storage temperature is -55 ^{O}C to 125 ^{O}C.

Thermal Considerations

The converter is designed to operate in different thermal environments and sufficient cooling must be provided.
Proper cooling can be verified by measuring the temperature at the test point as shown in the Figure 12. The temperature at this point should not exceed the max values in the table 6.

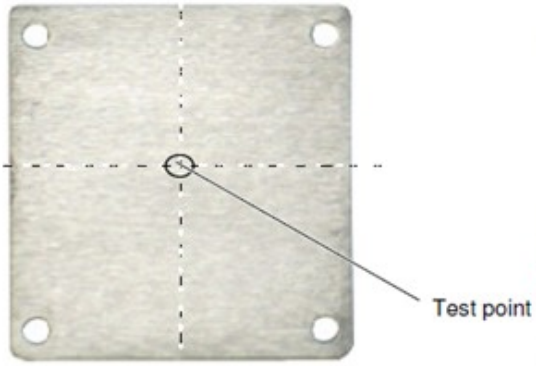

Figure 11 Temperature test point on FR-4 board



Figure 12 Temperature test points

Table 6. Temperature limit of the test points

Test Point	Temperature Limit
Test point	100 ^{O}C
Test point-1	107 ^{O}C

For a typical application, Figure 13 shows the derating of output current vs. ambient air temperature at different air velocity.

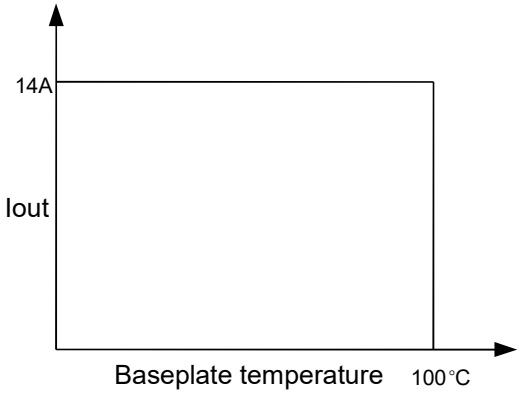

Figure 13 Output power derating at 48V_{in}

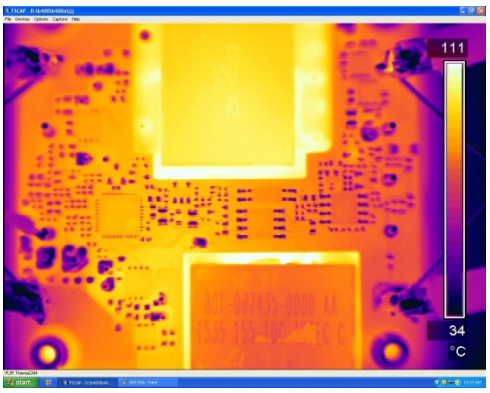

Figure 14 Infrared thermal image, 48Vin @ full load, 200LFM, 25°C

Qualification Testing

Parameter	Unit (pcs)	Test condition
Halt test	4~5	Ta,min-20 ^{O}C to Ta,max+35 ^{O}C, 5 ^{O}C step, Vin = min to max, 0 ~ 100% load
Vibration	3	Frequency range: 5Hz ~ 20Hz, 20Hz ~ 200Hz A.S.D: 1.0m^2/s^3, -3db/oct axes of vibration: X/Y/Z; Time: 30min/axis
Mechanical shock	3	30g, 6ms, 3 axes, 6 directions, 3 times/direction
Thermal shock	3	-55 ^{O}C to +125 ^{O}C, unit temperature 20 cycles
Thermal cycling	3	-40 ^{O}C to 85 ^{O}C, temperature change rate: 20 ^{O}C/min, cycles: 2 cycles
Humidity	3	40 ^{O}C, 95%RH,48h
Solder ability	15	IPC J-STD-002C-2007

Application Notes

Typical Application

Below is the typical application of the ADH700-48S50-6LS power supply.

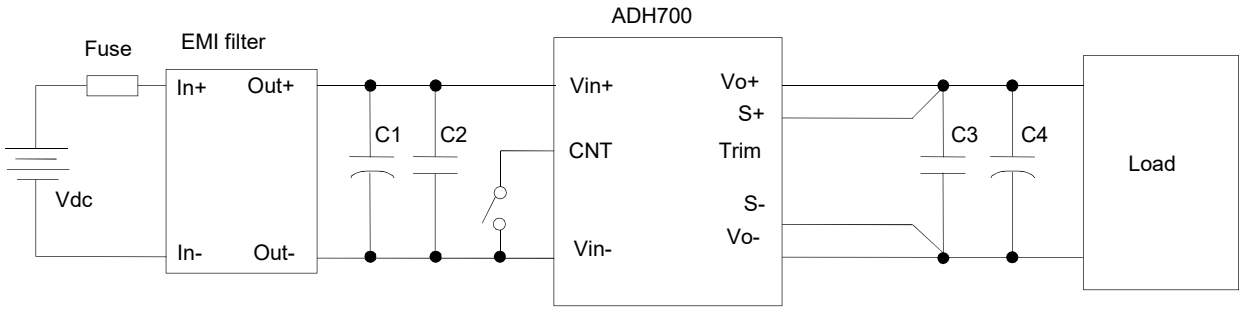

Figure 15 Typical application

C1: 470uF/100V electrolytic capacitor, P/N: UPW2A471MHD (Nichicon) or equivalent
C2: 0.1uF/100V X7R ceramic capacitor, P/N: 12101C104JAT2A (AVX) or equivalent caps
C3: 1uF/100V X7R ceramic capacitor, P/N: C3225X7R2A105KT0L0U (TDK) or equivalent
C4: 1000uF electrolytic capacitor, 2*P/N: UPW2A471MHD (Nichicon) or equivalent
Fuse: 30A fast blow fuse. P/N: 314030P (LITTLEFUSE)
Double minimum input/output capacitance is necessary for normal operation and performance in case of Ta < 0 ^{O}C.
EMI Filter: refer to figure 21

Remote ON/OFF

Either positive or negative remote ON/OFF logic is available in ADH700-48S50-6LS. The logic is CMOS and TTL compatible.

The following figure is the detailed internal circuit and reference in ADH700-48S50-6LS.

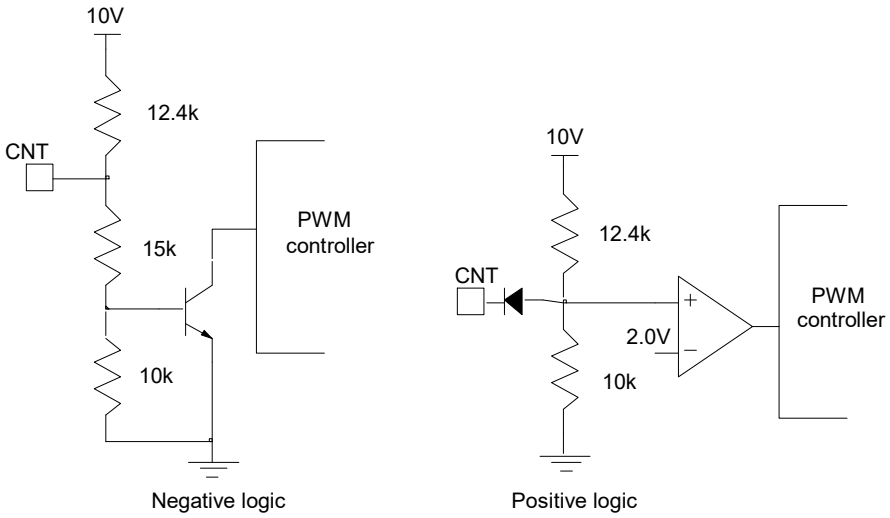

Figure 16 Remote ON/OFF internal diagram

Trim Characteristics

Connecting an external resistor between Trim pin and Vo- pin will decrease the output voltage, while connecting it between Trim and Vo+ will increase the output voltage. The following equations determine the external resistance to obtain the trimmed output voltage.

$$R_{adj_down} = (\frac{100\%}{\Delta\%} - 2)k\Omega$$

$$R_{adj_up} = (\frac{V_{norm}(100\% + \Delta\%)}{1.225 \times \Delta\%} - \frac{100\% + 2 \times \Delta\%}{\Delta\%})k\Omega$$

Δ : Output e rate against nominal output voltage.

$$\Delta = \left| \frac{100 \times (V_o - V_{norm})}{V_{norm}} \right|$$

V_{norm} : Nominal output voltage.

For example, to get 57V output, the trimming resistor is

$$\Delta = \frac{100 \times (V_o - V_{norm})}{V_{norm}} = \frac{100 \times (57 - 50)}{50} = 14$$

$$R_{adj-up} = \frac{50 \times (100\% + 14\%)}{1.225 \times 14\%} - \frac{100\% + 2 \times 14\%}{14\%} = 323.2(K\Omega)$$

For 1% adjustment resistor, the trimmed output voltage is guaranteed within $\pm 2\%$.
The output voltage can also be trimmed by potential applied at the Trim pin.

$$V_o = (V_{trim} + 1.225) \times 20.38$$

Where V_{trim} is the potential applied at the Trim pin, and V_o is the desired output voltage.

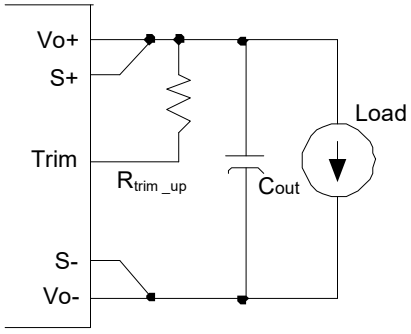

Figure 17 Trim up

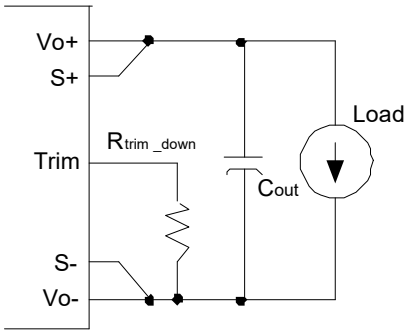

Figure 18 Trim down

For ADH700-48S50-6LS, if the sense compensate function is not necessary, connect S+ to Vo+ and S- to Vo- directly. When trimming up, the output current should be decreased accordingly so as not to exceed the maximum output power. When trimming up the output voltage, the minimum input voltage should be increased as shown in below figure19.

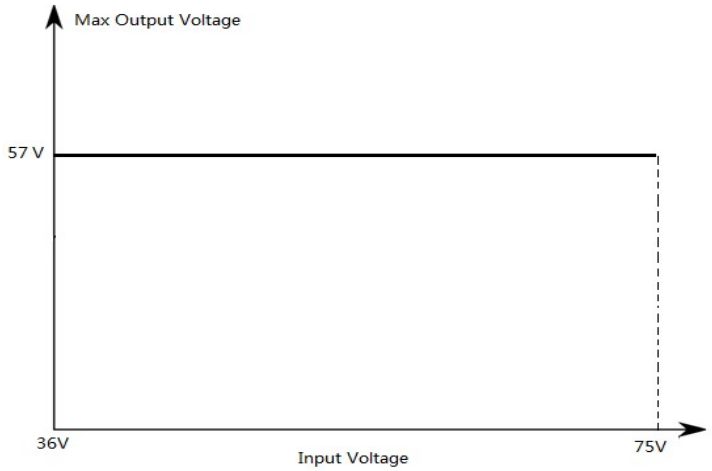

Figure 19 Trim up the output voltage

Input Ripple & Inrush Current and Output Ripple & Noise Test Configuration

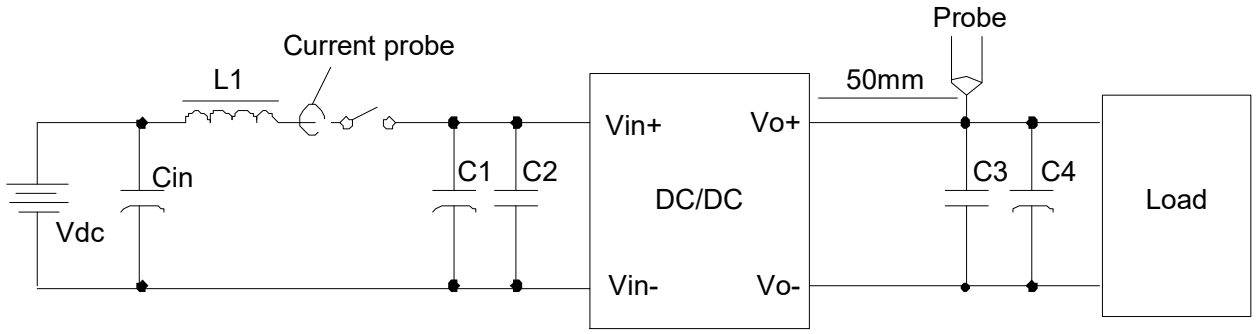

Figure 20 Input ripple & inrush current & ripple and noise test configuration

Vdc: DC power supply
L1: 12uH
Cin: 220uF/100V typical
C1: 470uF/100V electrolytic capacitor, High frequency and low ESR
C2: 0.1uF/100V X7R ceramic capacitor, P/N: 12101C104JAT2A (AVX) or equivalent caps
C3: SMD ceramic-100V-1000nF-X7R-1210
C4: 1000uF/100V electrolytic capacitor, High frequency and low ESR
Note: It is recommended to use a coaxial cable with series 50Ω resistor and 0.68uF ceramic capacitor or a ground ring of probe to test output ripple & noise.

EMC Test Conditions

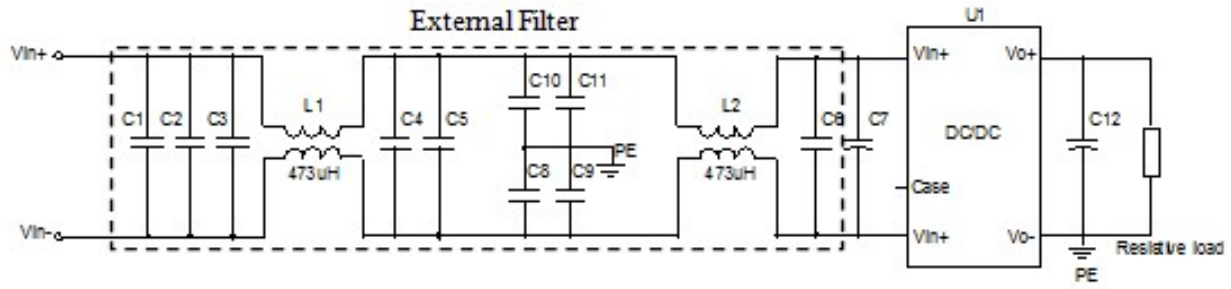

Figure 21 EMC test conditions

U1: Module to test, ADH700-48S50-6LS
C1 ~ C5: 2.2uF/100V X7R ceramic capacitor, P/N: GRM31CR72A225KA73 (muRata) or equivalent caps.
C6 : 0.1uF/100V X7R ceramic capacitor, P/N: 12101C104JAT2A (AVX) or equivalent caps.
C7: 470μF/100V electrolytic capacitor, P/N: UPM2A471MHD (Nichicon) or equivalent caps.
C8 ~ C11: 0.22uF/630V X7R ceramic capacitor, P/N: 2220CC224KA11A (AVX) or equivalent caps.
C12:1000uF/100V electrolytic capacitor, 2*P/N: UPM2A471MHD (Nichicon) or equivalent.
PE: Connect to Vo-.
Case: Not connected.

Soldering

The product is intended for standard manual or wave soldering.
When wave soldering is used, the temperature on pins is specified to maximum 260 ^{O}C for maximum 10s.
When manual soldering is used, the iron temperature should be maintained at 300 ^{O}C ~ 380 ^{O}C and applied to the converter pins for less than 10s. Longer exposure can cause internal damage to the converter.
Cleaning of solder joint can be performed with cleaning solvent IPA or simulative.

Hazardous Substances Announcement (RoHS of China)

Parts	Hazardous Substances					
	Pb	Hg	Cd	Cr^{6+}	PBB	PBDE
ADH700-48S50-6LS	x	x	x	x	x	x
ADH700-48S50P-6LS	x	x	x	x	x	x

x: Means the content of the hazardous substances in all the average quality materials of the part is within the limits specified in SJ/T-11363-2006

√: Means the content of the hazardous substances in at least one of the average quality materials of the part is outside the limits specified in SJ/T11363-2006

ARTESYN EMBEDDED TECHNOLOGIES Co., Ltd. has been committed to the design and manufacturing of environment-friendly products. It will reduce and eventually eliminate the hazardous substances in the products through unremitting efforts in research. However, limited by the current technical level, the following parts still contain hazardous substances due to the lack of reliable substitute or mature solution:

1. Solders (including high-temperature solder in parts) contain plumbum.
2. Glass of electric parts contains plumbum.
3. Copper alloy of pins contains plumbum.

Record of Revision and Changes

Issue	Date	Description	Originators
1.0	10.10.2017	First Issue	A. Zhang
1.1	06.20.2018	Update the Input Under Voltage Lockout data	K. Wang
1.2	11.26.2018	Update the formula typo error	K. Wang
1.3	08.15.2019	Update “60950” to “62368”	K. Wang

WORLDWIDE OFFICES

Americas
2900 S.Diablo Way
Tempe, AZ 85282
USA
+1 888 412 7832

Europe (UK)
Waterfront Business Park
Merry Hill, Dudley
West Midlands, DY5 1LX
United Kingdom
+44 (0) 1384 842 211

Asia (HK)
14/F, Lu Plaza
2 Wing Yip Street
Kwun Tong, Kowloon
Hong Kong
+852 2176 3333

While every precaution has been taken to ensure accuracy and completeness in this literature, Artesyn Embedded Technologies assumes no responsibility, and disclaims all liability for damages resulting from use of this information or for any errors or omissions. Artesyn Embedded Technologies, Artesyn and the Artesyn Embedded Technologies logo are trademarks and service marks of Artesyn Technologies, Inc. All other names and logos referred to are trade names, trademarks, or registered trademarks of their respective owners.
© 2014 All rights reserved.

ARTESYN™
EMBEDDED TECHNOLOGIES

www.artesyn.com

For more information: **www.artesyn.com/power**
For support: **productsupport.ep@artesyn.com**