ARTESYN AET SERIES

20 Watts

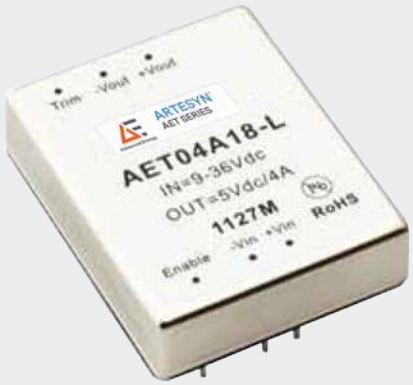

Advanced Energy's Artesyn AET series of 20 watt isolated DC-DC converters is available with an ultra wide 9–36 Vdc or 18–75 Vdc input. Each of these versions offers a choice of five single output models, with voltages of 2.5 V, 3.3 V, 5 V, 12 V or 15 V, and three dual output models offering +5/-5 V, +12/-12 V or +15/-15 V. The converters are encapsulated in a 2 x 1.6 inch (50.8 x 40.6 mm) metal case and have a height of just 0.48 inch (12.2 mm). They are ideal for ruggedized applications involving harsh environments. Standard features include 1,500 Vdc input/output isolation, overvoltage protection and short-circuit protection with auto-restart.

DATA SHEET

Total Power:

20 Watts

Input Voltage:

12, 24 or 48 V

# of Outputs:

Single, Dual

RoHS 6/6 COMPLIANT

SPECIAL FEATURES

- Encapsulated
- 4:1 input range
- 1.6” x 2” package
- 1500 Vdc I/O isolation
- Single and Dual output
- Remote on/off
- Adjustable output
- Conducted noise: meets EN 55022 class A, FCC level A

SAFETY

- CE Mark

©2021 Advanced Energy Industries, Inc.

ELECTRICAL SPECIFICATIONS

Input	
Input range	9 - 36 VDC; 18 - 75 VDC
Efficiency	85% @ 12 Vo
Output	
Voltage tolerance	< 1.6%
Line regulation	+0.5%
Load regulation	Single output: +0.5%; Dual output: +2.0%
Noise/ripple	All models: 100 mV
Short circuit protection	Auto-restart
Overvoltage protection	115 - 130% nominal output
Switching frequency	300 KHz
Temperature co-efficient	+0.02% / °C
Isolation	
I/O isolation	1500 VDC min
Insulation resistance	10 Mohm
Insulation capacitance	1000 pF

ENVIRONMENTAL SPECIFICATIONS

Operating ambient temperature range	-40 °C to +71 °C
Storage temperature	-55 °C to +105 °C
Humidity	5% to 95% non-condensing
MTBF	850 Khrs calculated

ORDERING INFORMATION

Model Number	Input Voltage	Output Voltage 1	Output Voltage 2	Maximum Power
AET06G18-L	9 - 36 V	2.5 V @ 6 A		15 W
AET06F18-L	9 - 36 V	3.3 V @ 6 A		19.8 W
AET04A18-L	9 - 36 V	5 V @ 4 A		20 W
AET01B18-L	9 - 36 V	12 V @ 1.67 A		20 W
AET01C18-L	9 - 36 V	15 V @ 1.33 A		20 W
AET02AA18-L	9 - 36 V	5 V @ 2 A	-5 V @ 2 A	20 W
AET00BB18-L	9 - 36 V	12 V @ 0.835 A	-12 V @ 0.835 A	20 W
AET00CC18-L	9 - 36 V	15 V @ 0.665 A	-15 V @ 0.665 A	20 W
AET06G36-L	18 - 75 V	2.5 V @ 6 A		15 W
AET06F36-L	18 - 75 V	3.3 V @ 6 A		19.8 W
AET04A36-L	18 - 75 V	5 V @ 4 A		20 W
AET01B36-L	18 - 75 V	12 V @ 1.67 A		20 W
AET01C36-L	18 - 75 V	15 V @ 1.33 A		20 W
AET02AA36-L	18 - 75 V	5 V @ 2 A	-5 V @ 2 A	20 W
AET00BB36-L	18 - 75 V	12 V @ 0.835 A	-12 V @ 0.835 A	20 W
AET00CC36-L	18 - 75 V	15 V @ 0.665 A	-15 V @ 0.665 A	20 W

MECHANICAL DRAWING - SINGLE OUTPUT

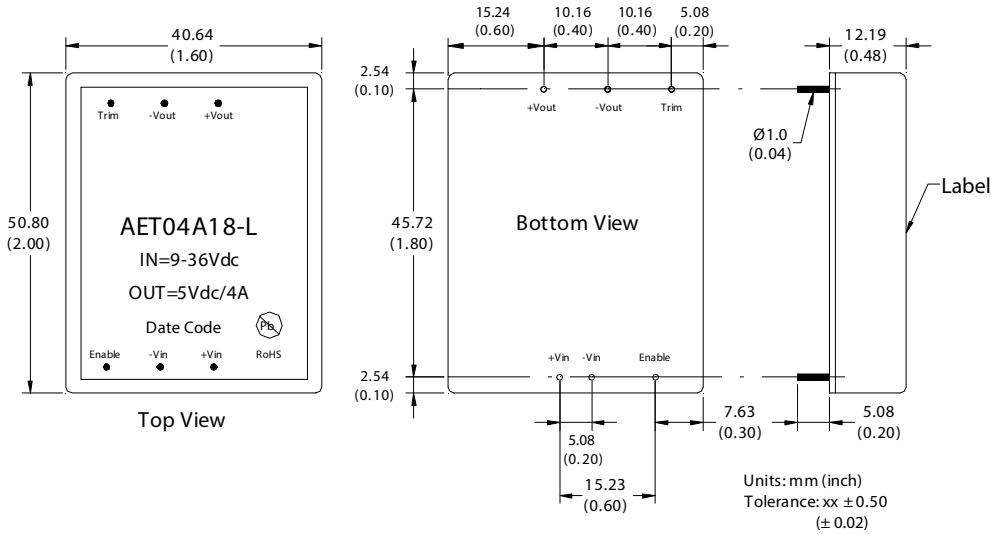

MECHANICAL DRAWING - DUAL OUTPUT

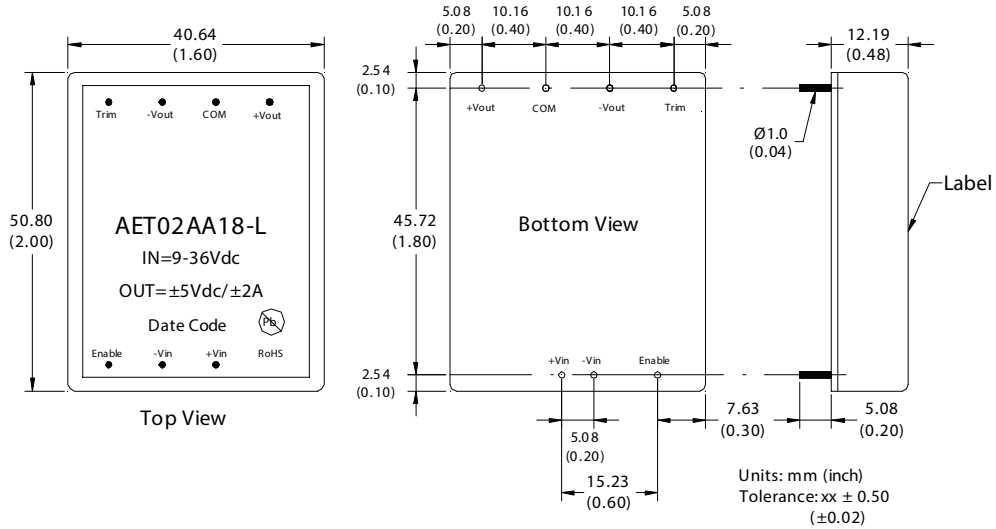

ABOUT ADVANCED ENERGY

Advanced Energy (AE) has devoted more than three decades to perfecting power for its global customers. AE designs and manufactures highly engineered, precision power conversion, measurement and control solutions for mission-critical applications and processes.

Our products enable customer innovation in complex applications for a wide range of industries including semiconductor equipment, industrial, manufacturing, telecommunications, data center computing, and medical. With deep applications know-how and responsive service and support across the globe, we build collaborative partnerships to meet rapid technological developments, propel growth for our customers, and innovate the future of power.

PRECISION | POWER | PERFORMANCE

For international contact information,
visit advancedenergy.com.

powersales@aei.com (Sales Support)
productsupport.ep@aei.com (Technical Support)
+1 888 412 7832

Specifications are subject to change without notice. Not responsible for errors or omissions. ©2021 Advanced Energy Industries, Inc. All rights reserved. Advanced Energy®, AE® and Artesyn™ are U.S. trademarks of Advanced Energy Industries, Inc.

ENG-AET 20W SERIES-235-01 1.19