ARTESYN AIF-PFC SERIES

1600 Watts

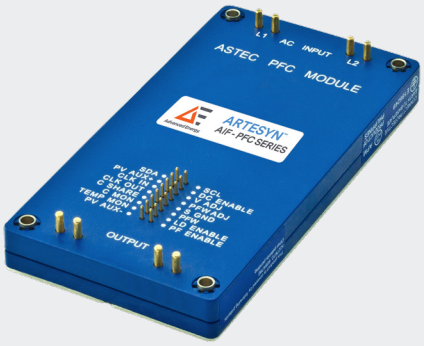

Advanced Energy's Artesyn AIF04ZPFC series full-brick power factor correction module accepts a wide 85 to 264 VAC input and presents a unity power factor. It can also be configured to accept a DC input within the range 120 to 370 VDC. Rated at 1,600 watts, the module has a high conversion efficiency of 95% and provides a nominal non-isolated output voltage of 380 Vdc. Featuring an industry-standard 2.4 x 4.6 full-brick form factor and a height of only 0.5 inch, they have a power density of 290 watts per cubic inch.

AT A GLANCE

Total Power:

1600 Watts
120 to 370 VDC (Configurable)

Input Voltage:

85 to 264 VAC

# of Outputs:

Single

SPECIAL FEATURES

- Unity power factor
- High efficiency - up to 95%
- Universal input voltage and frequency range
- Up to 1600 W output power
- Positive and Negative enable function
- Parallelable with accurate current sharing
- <10% harmonic distortion conforming to IEC1000-3-2 Compliance
- 100°C baseplate operating temperature
- DC Input option
- Power fail warning signal
- Enable output to control DC-DC Converter
- EEPROM data storage via I2C Interface
- External inrush current limited protection
- Power density up to 290 W/in^3
- Two year warranty

SAFETY

- UL 62368 Recognized
- cUL 62368 Recognized
- TUV EN62368 Licensed
- UKCA Mark

©2022 Advanced Energy Industries, Inc.

ELECTRICAL SPECIFICATIONS

Input	
Input range	85 to 264 VAC / 120 to 370 VDC (configurable)
Input surge	290 Vac / 1s
Input Frequency	50/60 Hz
Efficiency	95% @ 230 VAC, 1600 W (typical)
Total Harmonic Distortion	Less than 10%
Power Factor	0.99 typical (Po ± 500 W); 0.97 typical (Po ± 1000 W)
Output	
Output Voltage	380V typical (Io =4.2 A / Vi > 180 Vac); 393 V typical (Io = 0A) Note: Vin peak must always be lower than Vout
Current Share Accuracy	10% max
Overvoltage Protection	430 max
Power Limit for AC input for DC input	Vin = 85 VAC, Pmax = 1000W; Vin = 230 VAC, Pmax = 1600W Case; Vin = 370 VDC, Pmax =1600W
Isolation	
Power Fail Warning	Direct drive output to opto-isolator
Power Fail Warning Adjust	195 to 355 VDC adjustable
LD Enable	Direct drive output to opto-isolator
PFC Enable	TTL compatiable
Voltage Adjust	76% to 100% Vo
DC Input Enable	
Clock Input (external sync)	6 Vp-p typical @ 1 MHz ± 5%
Clock Output (int. clock)	6 Vp-p typical @ 1 MHz ± 5%
Temperature Monitor Output	10 mV/°C
Current Monitor Output	0 to 1 mA (1 mA = 4.2 A output)
I^2C Interface	

Notes: Nominal values apply with sense pins disconnected and other control pin unconnected.

ENVIRONMENTAL SPECIFICATIONS

Operating temperature	-20 °C to +100 °C (baseplate temperature)
Startup temperature	-40 °C to +100 °C (baseplate temperature)
Storage temperature	-40 °C to +120 °C
Overtemperature protection	120 °C max
MTBF	1million hours

ORDERING INFORMATION

Model Number	Description	Notes
AIF04ZPFC-01L	1600 W Low Profile PC Module	For parallel operation the total input current must be <16Arms.
AIF04ZPFC-02L	1600 W Low Profile PC Module	Designed for parallel operation where the total input current >16Arms, requires external rail rectifiers.
AIF04ZPFC-01NL		Negative Enable
AIF04ZPFC-02NL		Negative Enable

1. Fon Non-thread hole, add suffix "-NT".

PIN ASSIGNMENTS

Input (AC)	Output	Control Pins
31. L1	21. Positive	1. PV Aux -
32. L1	22. Positive	2. Temp Mon
33. L2	23. Negative	3. C Mon
34. L2	24. Negative	4. C Share
		5. Clk Out
		6. Clk In
		7. PV Aux +
		8. SDA
		9. SCL
		10. DC Enable
		11. V Adj
		12. PFW Adj
		13. S Gnd
		14. PFW
		15. LD Enable
		16. PF Enable

MECHANICAL DRAWINGS

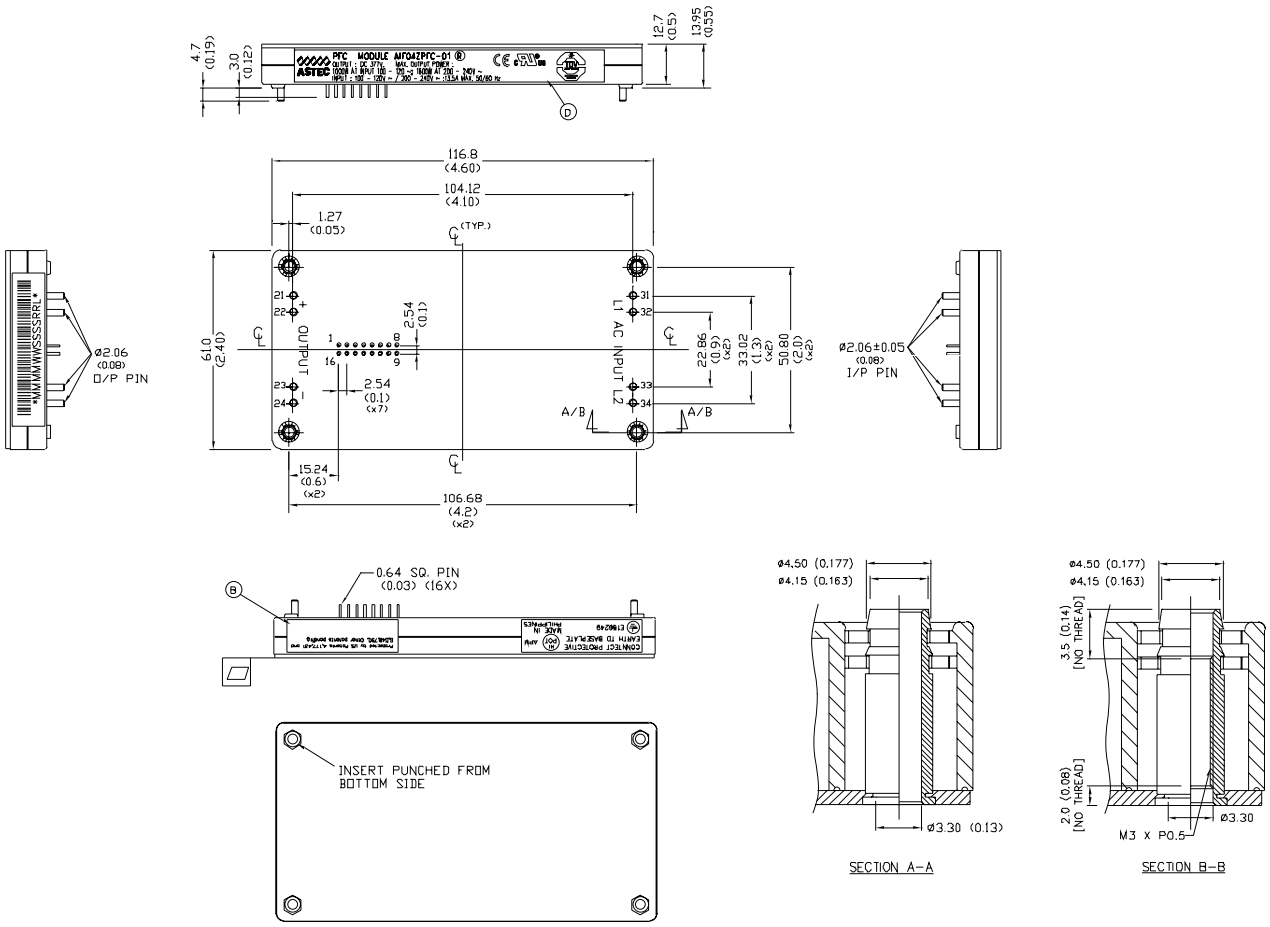

ABOUT ADVANCED ENERGY

Advanced Energy (AE) has devoted more than three decades to perfecting power for its global customers. AE designs and manufactures highly engineered, precision power conversion, measurement and control solutions for mission-critical applications and processes.

Our products enable customer innovation in complex applications for a wide range of industries including semiconductor equipment, industrial, manufacturing, telecommunications, data center computing, and medical. With deep applications know-how and responsive service and support across the globe, we build collaborative partnerships to meet rapid technological developments, propel growth for our customers, and innovate the future of power.

PRECISION | POWER | PERFORMANCE

For international contact information,
visit advancedenergy.com.

powersales@aei.com (Sales Support)
productsupport.ep@aei.com (Technical Support)
+1 888 412 7832

Specifications are subject to change without notice. Not responsible for errors or omissions. ©2022 Advanced Energy Industries, Inc. All rights reserved. Advanced Energy®, AE® and Artesyn™ are U.S. trademarks of Advanced Energy Industries, Inc.

ENG-AIF-PFC-235-01 1.30