TECHNICAL REFERENCE NOTE

ARTESYN AIF11WAC-01N SERIES

504 W Full Brick PFC Converter

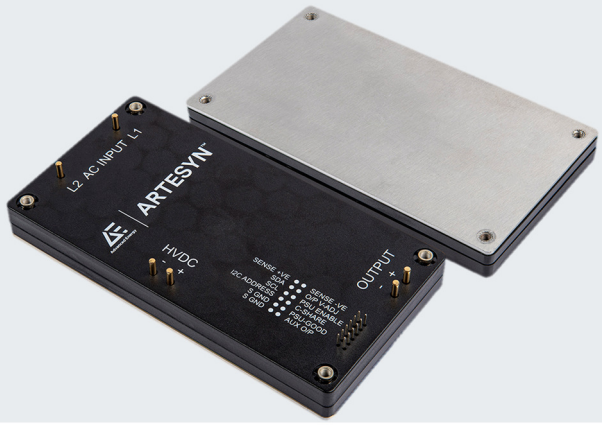

PRODUCT DESCRIPTION

Advanced Energy's Artesyn AIF11WAC-01N series full-brick module accepts a wide 90 to 264 Vac input. Rated at 504 W, the module has a high conversion efficiency of 93% typically and provides a nominal isolated output voltage of 48 Vdc with a 10 V auxiliary output. Featuring an industry-standard 2.4 x 4.6 in full-brick form factor and a height of only 0.55 in.

AT A GLANCE

Total Power

504 W

Input Voltage

90 to 264 Vac

# of Outputs

Main and Auxiliary

SPECIAL FEATURES

- 504 W continuous power
- High efficiency: 93% (typical)
- Baseplate optimized for contact cooling or heatsink mounting
- High reliability
- RoHS 6 compliant
- PMBus™ communication
- Standard full brick outline
- Parallel and current sharing version
- -40°C operation
- Two-year warranty

SAFETY

- TUV
- CE EN62368-1
- UL 62368-1
- CB report
- UKCA mark

PATENT

Pending www.artesyn.com/ep-patents

Pending

artesyn.com/IP

PMBus® Power Management. Defined.

RoHS

©2024 Advanced Energy Industries, Inc.

MODEL NUMBERS

Standard	Input Voltage	Output Voltage	Minimum Load[1]	Maximum Load	Auxiliary Supply
AIF11WAC-01N	90 to 264Vac	48Vdc	0A	10.5A	10Vdc@250mA

Note 1 - The power supply operation with no load will meet all requirements with the exception of the transient requirements.

Order Information

AIF	11	W	AC	-	01	N	T
①	②	③	④		⑤	⑥	⑦

①	Model series	Full brick size unit, AIF: full brick
②	Output current	11: 10.5A rated output current
③	Output voltage	W: the output is 48Vdc
④	Input voltage type	AC: AC input
⑤	Model variant	01: The variant that can be stand-alone or 2 in parallel
⑥	Remote on/off logic	Blank is default and Positive enable. N: Negative enable
⑦	Thread option	Blank is threaded insert. T: Non-threaded insert

Options

None

ELECTRICAL SPECIFICATIONS

Absolute Maximum Ratings

Stress in excess of those listed in the "Absolute Maximum Ratings" may cause permanent damage to the power supply. These are stress ratings only and functional operation of the unit is not implied at these or any other conditions above those given in the operational sections of this TRN. Exposure to any absolute maximum rated condition for extended periods may adversely affect the power supply's reliability.

Table 1. Absolute Maximum Ratings[1]

Parameter	Model	Symbol	Min	Typ	Max	Unit
Input Voltage Operating - Continuous Surge Voltage (100 mSec maximum)	AIF11WAC-01N	$V_{IN,AC}$	90[2] -	- -	264 300	Vac Vac
Input Frequency	AIF11WAC-01N		47	-	63	Hz
Maximum Output Power	AIF11WAC-01N	$P_{O,max}$	-	-	504	W
Isolation Voltage Input to Output Input to Baseplate Output to Baseplate	AIF11WAC-01N		 - - -	 - - -	 4000 2500 100	 Vdc Vdc Vdc
Operating Ambient Temperature	AIF11WAC-01N	T_A	-40	-	85	°C
Operating Baseplate Temperature	AIF11WAC-01N	$T_{_BP}$	-40	-	100	°C
Storage Temperature	AIF11WAC-01N	T_{STG}	-40	-	105	°C
Humidity (non-condensing) Operating Storage	 AIF11WAC-01N AIF11WAC-01N		 5 5	 - -	 90 95	 % %
Altitude Operating Non-operating	 AIF11WAC-01N AIF11WAC-01N		 0 0	 - -	 10000 40000	 Feet Feet
CMTBF Telcordia Issue 4, Method 1 Case1[3]	AIF11WAC-01N		1	-	-	M Hours
Audible Noise[4]	$V_{IN,AC}$ = 85 to 264Vac		-	-	20	dBA

Note 1 - Unless otherwise indicated, specifications applied over all operating input voltage and temperature conditions. Standard test condition on a single unit.
Note 2 - The power supply can extend the operation down to 85Vac after it's turned on at nominal input voltage range and output power is derated from 504W max to 470W max when operating at 85Vac or less than 90Vac. The power supply can start up at 90Vac at full load condition.
Note 3 - 50% Electrical stress and 40°C component ambient temperature.
Note 4 - Measured 1 meter high and 1 meter away from the power supply.

ELECTRICAL SPECIFICATIONS

Input Specifications

Table 2. Input Specifications

Parameter	Condition	Symbol	Min	Typ	Max	Unit
Operating Input Voltage, AC	All	$V_{IN,AC}$	90	115/230	264	Vac
Input AC Frequency	All	f_{IN}	47	50/60	63	Hz
Maximum Input Current ($I_O = I_{O,max}$)	$V_{IN,AC}$ = 100Vac $V_{IN,AC}$ = 200Vac	$I_{IN,max}$	- -	- -	6 3	A A
No Load Input Current (V_O On, I_O = 0A, I_{SB} = 0A)	$V_{IN,AC}$ = 90Vac $V_{IN,AC}$ = 264Vac V_O = 48Vdc	I_{IN,no_load}	- -	- -	300 250	mA
Harmonic Line Currents[1]	I_O = 20% - 100%$I_{O,max}$ I_O = 100%$I_{O,max}$ I_O = 50% - 100%$I_{O,max}$	THD	10% max at 240Vac EN 61000-3-2 Class A EN 61000-3-2 Class C			
Power Factor	$V_{IN,AC}$ = 115Vac, I_O > 20%$I_{O,max}$	PF	0.95	-	-	
	$V_{IN,AC}$ = 230Vac, I_O > 50%$I_{O,max}$	PF	0.95	-	-	
Startup Surge Current (Inrush)[2]	$V_{IN,AC}$ = 240Vac	$I_{IN,surge}$	-	-	20	A
AC Input Leakage Current[3]	$V_{IN,AC}$ = 264Vac f_{IN} = 60Hz	$I_{IN,leakage}$	-	-	3.0	mA
Hold Up Time[4]	$I_O = I_{O,max}$	T_{off_hold}	20	-	-	mSec
Input AC Low Line Start Up	All	$V_{IN,AC}$	82	85	88	Vac
Input AC Low Line Undervoltage Lockout	All	$V_{IN,AC}$	76	79	82	Vac
Efficiency	$V_{IN,AC}$ = 115Vac (60Hz) $V_{IN,AC}$ = 230Vac (50Hz)	η	- -	91.5 93.0	- -	% %
Turn On Delay	$I_O = I_{O,max}$	T_{on_delay}	-	-	3.5	Sec
Loop Stability[5] Phase Margin Gain Margin			 45 -6	 - -	 - -	 Ø dB
Bulk Capacitor Voltage[6]		V_{Bulk}	375	-	425	VDC

Note 1 - Tested with AE recommended external EMI filter.
Note 2 - Charging current for EMI-X capacitors is not considered to be inrush current.
Note 3 - Tested with AE recommended external EMI filter.
Note 4 - Tested with external 475V 560µF bulk cap.
Note 5 - Tested with AE recommended external cap load range in standalone and redundancy.
Note 6 - Varied with different input and output voltage.

ELECTRICAL SPECIFICATIONS

Output Specifications

Table 3. Output Specifications

Parameter	Condition	Symbol	Min	Typ	Max	Unit
Maximum Output Power	All	$P_{O,max}$	-	-	504	W
Rated Output Current	All	I_O I_{AUX}	0 0	- -	10.5 250[1]	A mA
Total Regulation	Inclusive of set-point, line, load temperature change, warm-up drift	$\%V_O$ V_{AUX}	-5 8	- -	5 11	% Vdc
Output Voltage Adjust Range	All	V_O	44.0	-	56.6	Vdc
Output Voltage Ripple and Noise[2]	Measure at 0.1µF of ceramic and 10µF of tantalum capacitance, over 0 to 20MHz bandwidth	V_O V_{AUX}	- -	- -	480 200	mV_{PK-PK} mV_{PK-PK}
Capacitance Load	All	C_O C_{AUX}	470 1	- -	2500[3] 100[4]	µF µF
Rise Time	From 10% - 90% voltage level	$T_{O,Ramp}$ $T_{AUX,Ramp}$	- -	- -	30 50	mSec mSec
Output Overshoot	All	$\%V_{O_Set}$ $\%V_{AUX}$	- -	- -	5 10	% %
AC Ride Through[5]	Tested with external 475V 560µF bulk cap	$T_{O,ride}$	20	-	-	mSec
Dynamic Response[6] Peak Deviation Settling time	Start from $10\%I_{O,max}$ and 50% load change 1A/µSec slew rate	$\%V_O$ $T_{Settling}$	- -	±5 -	- 1	% mSec
Remote Sense Compensation		V_O	-	-	0.2	Vdc
Main Output Current Share Accuracy[7]	All	$\%I_{O,max}$	-	-	10	%
Number of Parallel Units	Main output current share connected		-	-	10	Units
PSU-GOOD High	Good state	PG_H	2.4	3.0	-	V
PSU-GOOD Low	Fault state	PG_L	0	-	0.8	V
PSU-GOOD Source Current	PSU–GOOD High	PG_source	-	-	10	mA
PSU-GOOD Sink Current	PSU–GOOD Low	PG_sink			2	mA

Note 1 - 250mA maximum for N+0; 150mA maximum for 1+1 and N+1 application.
Note 2 - With recommended ceramic cap plus 470µF (8*80SXE56M+T or equivalent) of load capacitance for main output, and with 1µF of load capacitance for auxiliary output.
Note 3 - Recommended ceramic caps plus 470 to 2500µF. (Recommended ceramic caps + 470µF minimum of low ESR & high ripple current cap load (8 x 80SXE56M+T or equivalent) needs to closely placed around 1cm to the 48V output of AIF11WAC module.
Note 4 - 100µF for parallel units.
Note 5 - Tested with 475V 560µF of output load capacitance.
Note 6 - Tested with recommended external output capacitors, and the power supply must operate within specified limits over the capacitive load range at 50 - 5KHz.
Note 7 - Tested with two units minimum by AE.

ELECTRICAL SPECIFICATIONS

System Timing Specifications

Table 4. System Timing Specifications

Label	Parameter	Min	Typ	Max	Unit
T0	Auxiliary output voltage rise time for 10V from 10% to 90% of the voltage level.	5	-	50	mSec
T1	Main output voltage rise time for 48V from 10% to 90% of the voltage level.	5	-	30	mSec
T2	Delay from AC being applied to auxiliary output being within regulation.	500	-	2500	mSec
T3	Delay from AC being applied to main output being within regulation (PSU ENABLE = LOW).	500	-	3500	mSec
T4	Hold up time - main output voltage stay within regulation after the loss of AC at full load.	20	-	-	mSec
T5	Delay from loss of AC input to de-assertion of PSU-GOOD.	20	-	-	mSec
T6	Delay from PSU ENABLE active to main output voltage within regulation limit.	5	-	500	mSec
T7	Delay from PSU ENABLE de-asserted to PSU-GOOD being de-asserted.	5	-	20	mSec
T8	Delay from output voltages in regulation to PSU-GOOD asserted.	100	-	200	mSec
T9	Delay from PSU-GOOD de-asserted to output voltages dropping out of regulation limits.	0.1	-	500	mSec
T10	Delay from PSU-GOOD de-asserted to auxiliary output voltages dropping out of regulation limits.	20	-	-	mSec
T11	Delay from auxiliary output in regulation to main output in regulation (PSU ENABLE = LOW).	50	-	2500	mSec
T12	OCP bounce off time	-	8000	-	mSec

Note: Timing does not follow the above table if model operates in N+0 or N+M application under any AC dropout or AC cycling conditions.

ELECTRICAL SPECIFICATIONS

System Timing Diagram

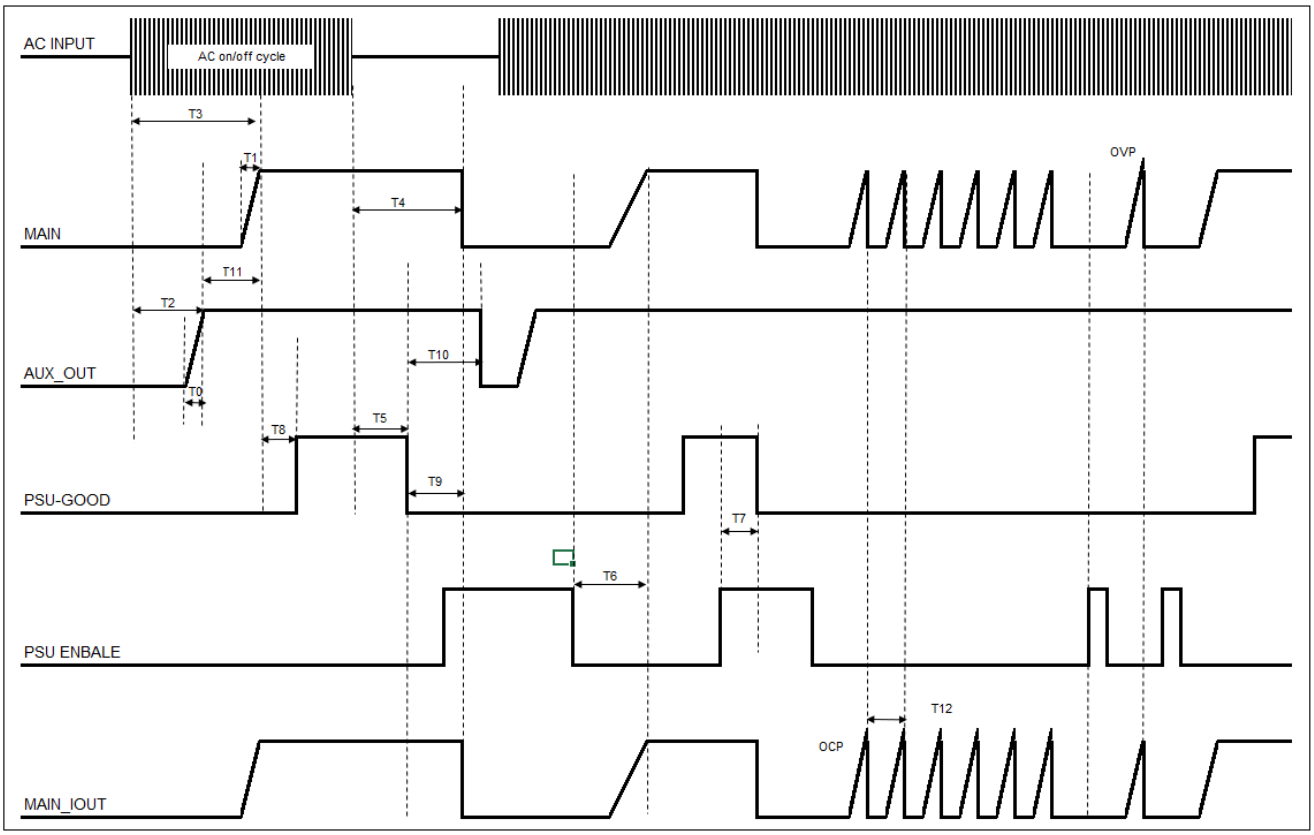

ELECTRICAL SPECIFICATIONS

AIF11WAC-01N Performance Curves

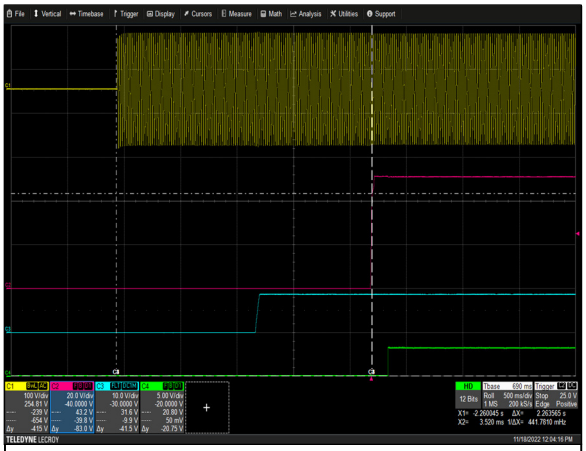

Figure 1: AIF11WAC-01N Turn-On Delay via AC Mains
Vin = 90Vac Load: I_O = 10.5A I_{SB} = 0.25A
Ch 1: AC Mains Ch 2: V_O Ch 3: V_{SB} Ch 4: PSU-GOOD

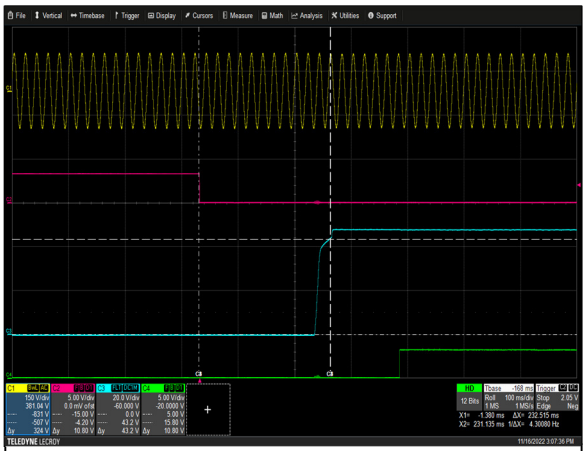

Figure 2: AIF11WAC-01N Turn-On Delay via PSON
Vin = 90Vac Load: I_O = 10.5A I_{SB} = 0.25A
Ch 1: AC Mains Ch 2: PSU ENABLE Ch 3: V_O Ch 4: PSU-GOOD

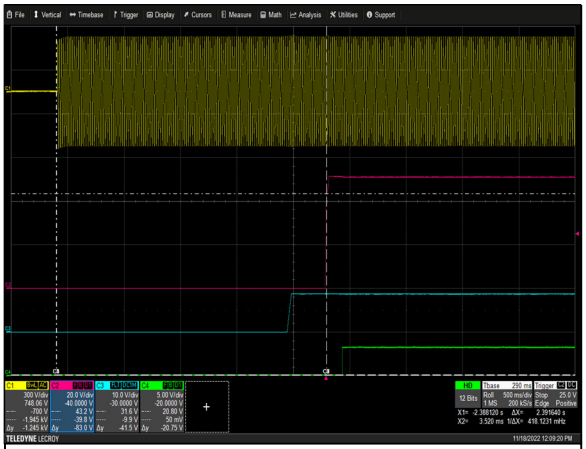

Figure 3: AIF11WAC-01N Turn-On Delay via AC Mains
Vin = 264Vac Load: I_O = 10.5A I_{SB} = 0.25A
Ch 1: AC Mains Ch 2: V_O Ch 3: V_{SB} Ch 4: PSU-GOOD

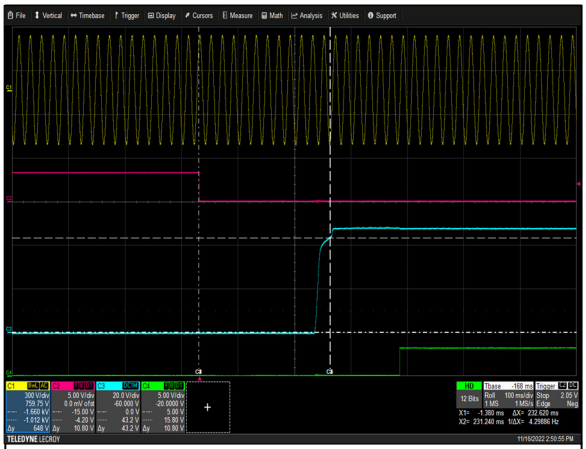

Figure 4: AIF11WAC-01N Turn-On Delay via PSON
Vin = 264Vac Load: I_O = 10.5A I_{SB} = 0.25A
Ch 1: AC Mains Ch 2: PSU ENABLE Ch 3: V_O Ch 4: PSU-GOOD

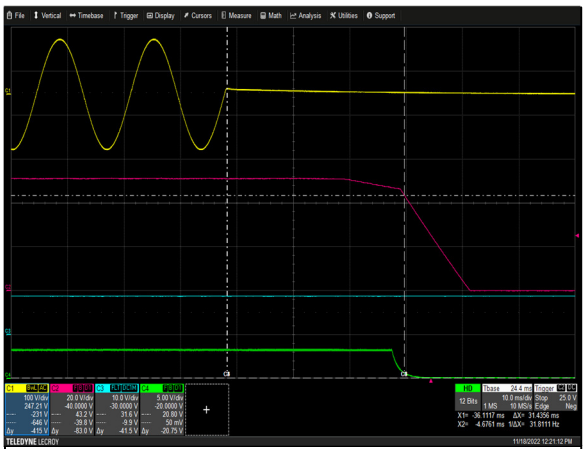

Figure 5: AIF11WAC-01N Hold-Up Time
Vin = 90Vac Load: Io = 10.5A I_{SB} = 0.25A
Ch 1: AC Mains Ch 2: V_O Ch 3: V_{SB} Ch 4: PSU-GOOD

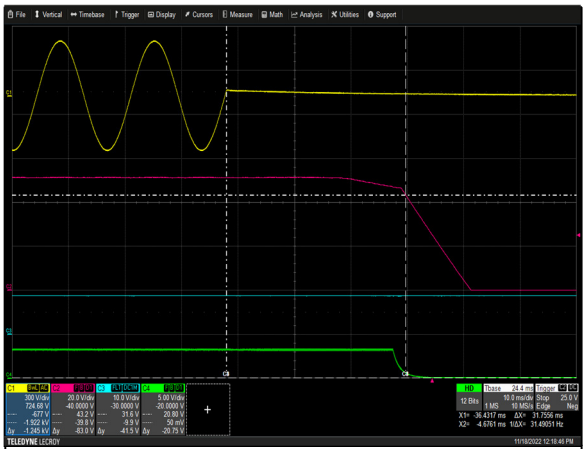

Figure 6: AIF11WAC-01N Hold-Up Time
Vin = 264Vac Load: Io = 10.5A I_{SB} = 0.25A
Ch 1: AC Mains Ch 2: V_O Ch 3: V_{SB} Ch 4: PSU-GOOD

ELECTRICAL SPECIFICATIONS

AIF11WAC-01N Performance Curves

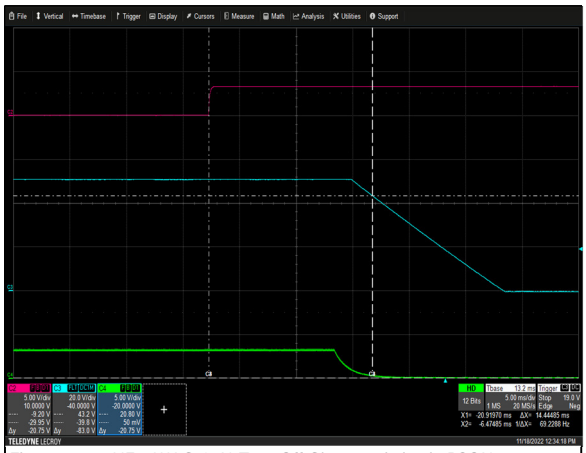

Figure 7: AIF11WAC-01N Turn Off Characteristic via PSON
Vin = 230Vac Load: Io = 10.5A I_{SB} = 0.25A
Ch 2: PSU ENABLE Ch 3: V_O Ch 4: PSU-GOOD

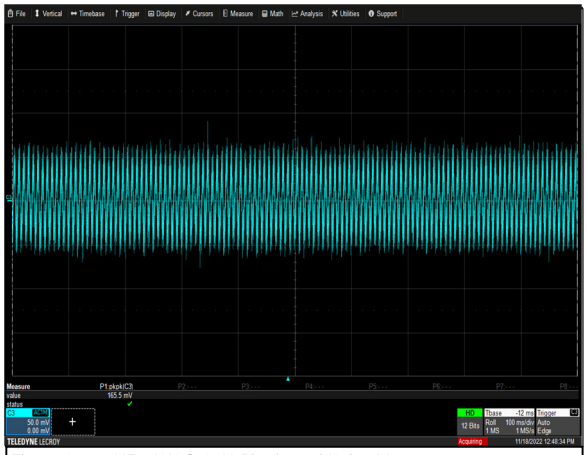

Figure 8: AIF11WAC-01N Ripple and Noise Measurement
Vin = 230Vac Load: Io = 10.5A I_{SB} = 0.25A
Ch 1: V_O

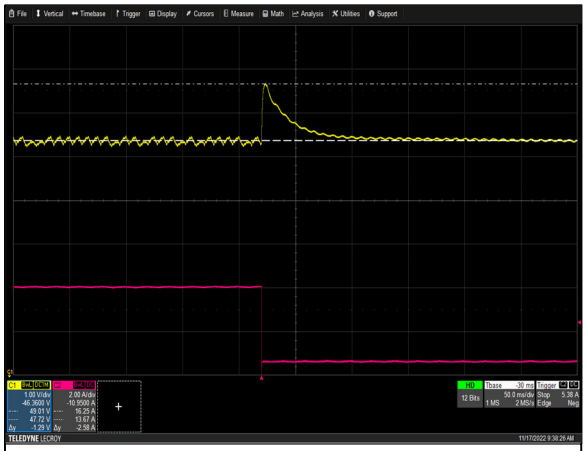

Figure 9: AIF11WAC-01N Transient Response - V_O Deviation
100% to 50% load change 1A/µs slew rate Vin = 230Vac
Ch 1: V_O Ch 2: I_O

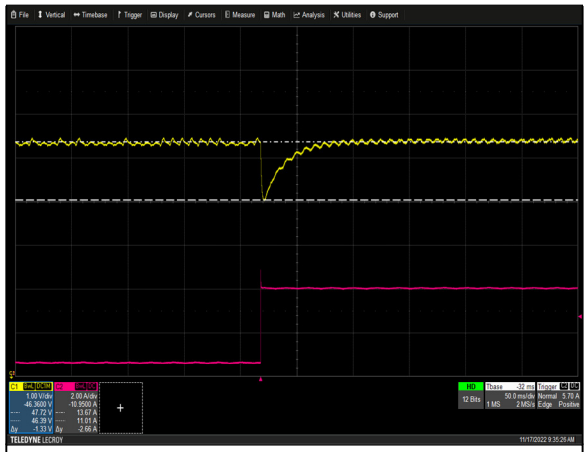

Figure 10: AIF11WAC-01N Transient Response - V_O Deviation
50% to 100% load change 1A/µs slew rate Vin = 230Vac
Ch 1: V_O Ch 2: I_O



Figure 11: AIF11WAC-01N Output Voltage Startup Characteristic
Vin = 230Vac Load: I_O = 10.5A I_{SB} = 0.25A
Ch 3 : V_O

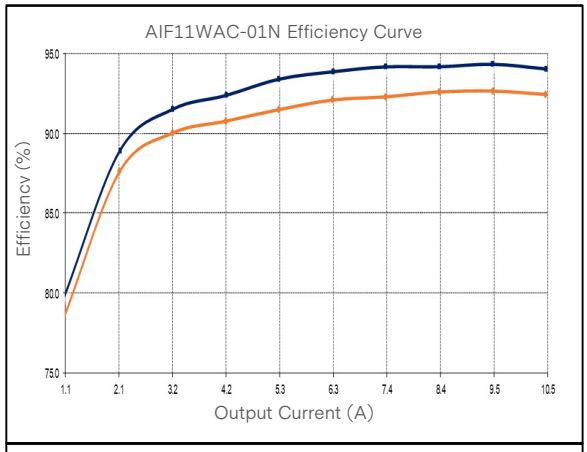

Figure 12: AIF11WAC-01N Efficiency Curve @ 25°C
115Vac 230Vac
Loading: I_{o_main} = 10%$I_{o,max}$ increment to $I_{o,max}$

ELECTRICAL SPECIFICATIONS

AIF11WAC-01N Performance Curves

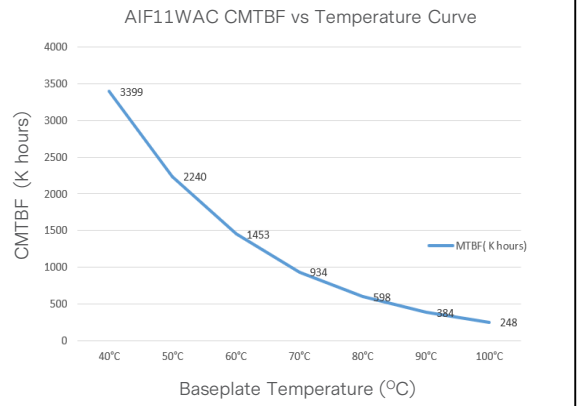

Figure 13: AIF11WAC-01N CMTBF vs Temperature Curve (K hours)

ELECTRICAL SPECIFICATIONS

Protection Function Specifications

Protection circuits inside the power supply should cause only the main output to shut down. The auxiliary output voltage should remain powered on if the failure does not affect its circuits.

Input Fuse

External input fuse (fast blow type, 10A maximum) should be added to protect against catastrophic failures and to meet agency requirements in the application with AIF11WAC-01N.

Output Overvoltage Protection (OVP)

The power supply is latched off when the over voltage triggered.

Parameter	Min	Typ	Max	Unit
V_O Output Overvoltage	55	61.2	65	Vdc
V_{AUX} Output Overvoltage	11.2	12.8	13.2	Vdc

Output Under Voltage Protection (UVP)

The power supply is latched off when the under voltage triggered.

Parameter	Min	Typ	Max	Unit
V_O Output Under Voltage	/	40.3	42	Vdc

Over Current Protection (OCP)

The AIF11WAC-01N series have the current limit to prevent the main output from exceeding the over current limit value. The 48V output goes into a constant current mode with voltage droop 7.333V/A typical when current exceeds 12.6A±0.25A or 504W±12W , it hits UVP or OVP when current exceeds 12.6A±0.25A, then goes into hiccup mode.

Parameter	Min	Typ	Max	Unit	Fault mode
V_O Output Over Current	106	/	115	$\%I_{O,max}$	Constant current (CC)
	115	120	125	$\%I_{O,max}$	Latch after 5 times hiccup
V_{AUX} Output Over Current Protection	106	/	140	$\%I_{AUX,max}$	Hiccup mode

Short Circuit Protection (SCP)

Short circuit of the power supply outputs will not result in fire hazard, shock hazard, or damage to the power supply. Components will not be damaged during the short circuit conditions. Power supply must return to regulation automatically within 8 seconds after short is removed before latch off. The power supply does not support cross short between main output and auxiliary output.

Over Temperature Protection (OTP)

The AIF11WAC-01N series power supply is protected against over temperature conditions caused by excessive Temp Mon ($102^{O}C \leq$ Temp Mon $\leq 112^{O}C$). In an OTP condition, the power supply shuts down the main output but leave the auxiliary output on.

ELECTRICAL SPECIFICATIONS

Reverse Sense Protection

Outputs with remote sense is protected against reversal of sense leads. The output shuts down if the sense leads are reversed or shorted together.

Loop Stability

The power supply feedback loop should be unconditionally stable under following conditions:
1. Any line and load conditions including no load.
2. Temperature
3. With up to the maximum load capacitance of 2500µF.

Minimum phase margin under normal operating conditions is at least 45° at 0-gain crossover frequency and at least -6dB of gain margin above 0-phase crossover frequency (test with AE recommended external capacitance load range in standalone and redundancy).

Grounding

The S GND and the main output return are tied together via 0.5ohm internally, and both are tied to the output pins of the power supply. All control signals are referenced to the S GND. A cap of 100nF is connected between the main output return and baseplate aluminum internally.

Power and Cooling

The power supply should have conduction-cooling by mounting a heatsink on the baseplate of the module. The baseplate at center location should be controlled less than 100°C for any operating conditions.

Fault Event Behavior

Fault Event	Parameter
OTP	The main output shuts down. Once the fault condition is removed then it recovers automatically. The auxiliary output always remains ON. The power supply restores the 48V output automatically when temperature monitor below 80°C.
48V Main OVP	The main output latches off when Vo exceeds 61.2V. The power supply recovers by following methods: 1. AC power recycling, 2. the fault clear by PMBus command, 3. remote on/off. The auxiliary output always remains on.
AUX 10V OVP	The auxiliary output latches off when V_{AUX} exceeds 12.8V. The power supply recovers by following methods: 1. AC power recycling, 2. the fault clear by PMBus command, 3. remote on/off. The main output remains on.
48V Main OCP / SCP	The main output shuts down and retries to recover for 5 times then latches off if the fault still presents. The power supply recovers by following methods: 1. AC power recycling, 2. the fault clear by PMBus command, 3. remote on/off. The auxiliary output always remains on.
AUX 10V OCP / SCP	The main output doesn't shut down. The auxiliary output shuts down and enters hiccup mode.
48V Main UVP	The main output shuts down when Vo drops below 40.3V with 5 times retry then latch off if the fault is still present. The power supply recovers by following methods: 1. AC power recycling, 2. the fault clear by PMBus command, 3. remote on/off. The auxiliary output always remains on.

MECHANICAL SPECIFICATIONS

Mechanical Outlines (unit: mm)

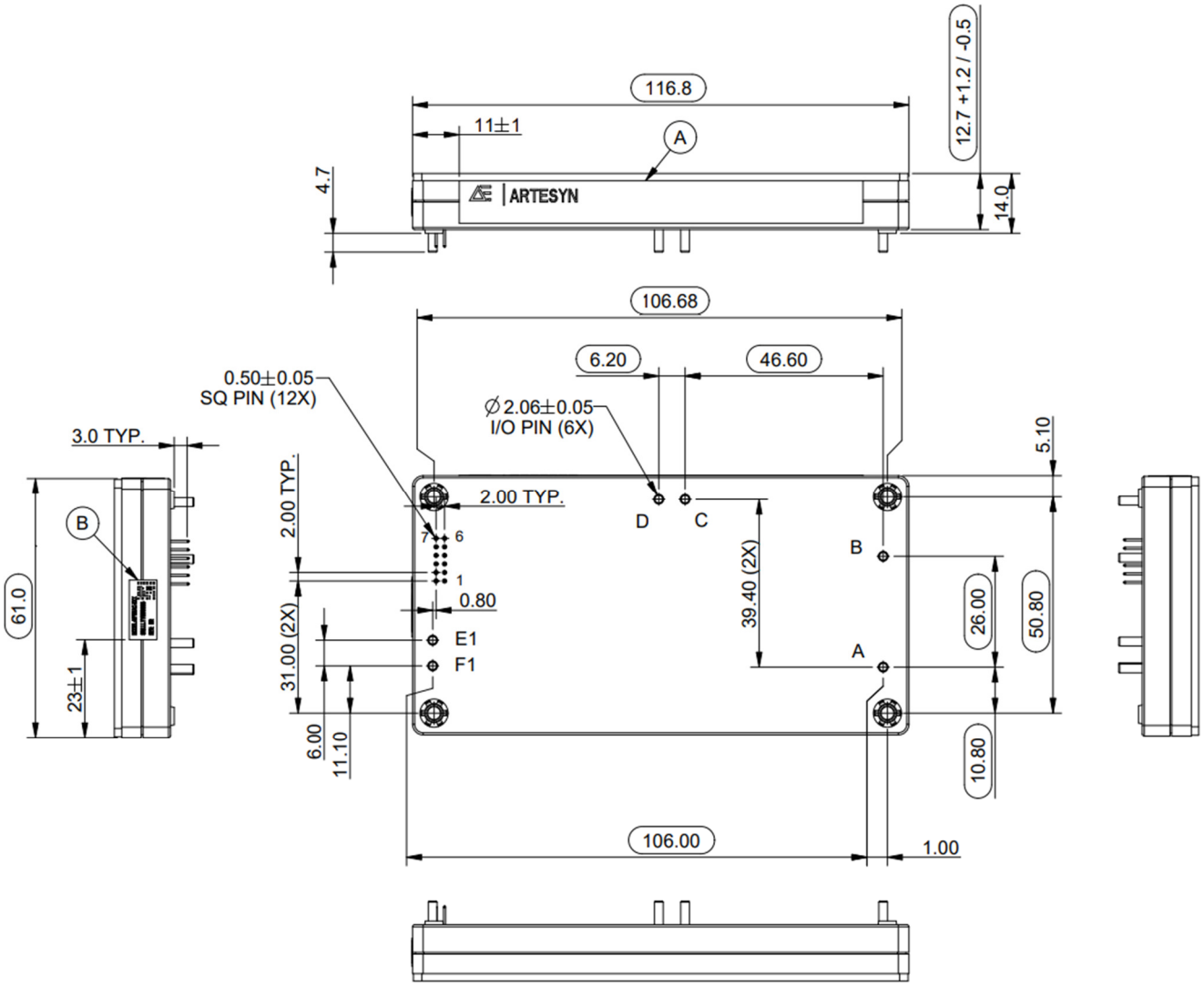

Note 1 - Module size: 14 x 61 x 116.8mm (H x W x L) with tolerance ±0.5mm

Note 2 - Surface flatness:

Concave inwards: 0.2mm max.

Convex outwards: 0.38mm max.

Note 3 - Material: plastic case with aluminum baseplate

Note 4 - Max screw torque for mounting: 8 kgf-cm

Note 5 - Cooling: conducted cool via heatsink

Note 6 - Listed part numbers are given for reference

MECHANICAL SPECIFICATIONS

Power Supply Input & Output Connector

Power pins & signal pins of the power supply input & output connectors will be soldered to the system power board.

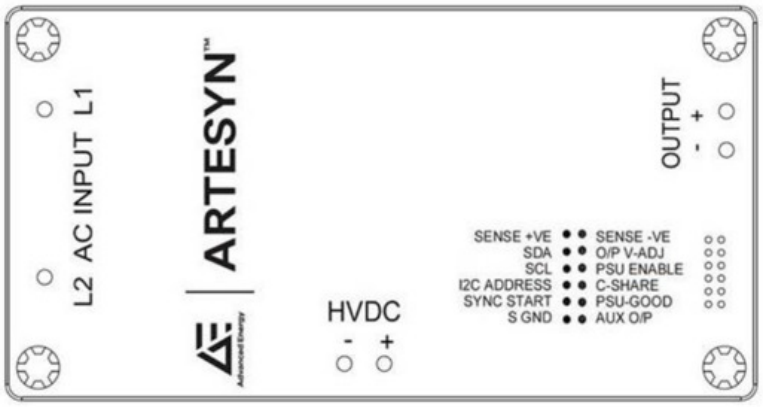

Pin Assignments

Pin Assignments		
Input (AC)	Output (DC)	Signal Pins
L1	O/P (+)	1. SENSE +VE
L2	O/P (-)	2. SDA
HVDC (+)		3. SCL
HVDC (-)		4. I²C ADDRESS
		5. SYNC START
		6. S GND
		7. AUX O/P
		8. PSU-GOOD
		9. C-SHARE
		10. PSU ENABLE
		11. O/P V-ADJ
		12. SENSE -VE

MECHANICAL SPECIFICATIONS

Weight

The AIF11WAC-01N series module weight is 200g typical and 280g maximum.

ENVIRONMENTAL SPECIFICATIONS

Safety Certifications

The AIF11WAC-01N series module is intended for inclusion in other equipment and the installer must ensure that it is in compliance with all the requirements of the end application. This product is only for inclusion by professional installers within other equipment and must not be operated as a stand alone product.

Table 5. Safety Certifications for AIF11WAC-01N Series Module

Standard	Agency	Description
UL 62368-1	UL	US and Canada Requirements
EN/IEC 62368-1	TUV	Europe Requirements
EN/IEC 62368-1	CE	CE Marking by Internal Verification/Certificate
EN/IEC 62368-1	CB	All CENELEC Countries
UKCA Mark	-	UK Requirements
RoHS and REACH	-	-

ENVIRONMENTAL SPECIFICATIONS

EMC Immunity

The power supply is an AC input power supply for which the Telco standards & approvals are not required. Target to meet the following requirement with AE recommended EMI filter.

Requirement	Specification
Conducted Radiation	Class A with 6db margin minimum with AE recommended EMI filter
Electrical Fast Transient (EFT)	2KV min
Lightning Surge[1]	**Option 1** **EN55035** 1kV Differential mode 2kV Common mode — Criteria A
	Option 2 **ITU-T K.20** 2.5kV Differential mode 2.5kV Common mode — Criteria A **EN300 132-1** 2kV Differential mode 4kV Common mode — Criteria B

Note 1 – To meet option 2, please refer to EMI filter upgrade on page 35.

Conducted Emissions

The applicable standard for conducted emissions is EN55032. Conducted noise can appear as both differential mode and common mode noise currents. Differential mode noise is measured between the two input lines, with the major components occurring at the supply fundamental switching frequency and its harmonics. Common mode noise, a contributor to both radiated emissions and input conducted emissions, is measured between the input lines and system ground and can be broadband in nature.

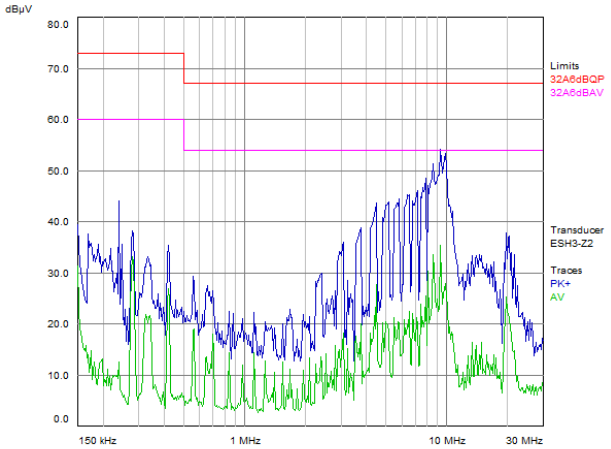

The AIF11WAC series power supply could connect with AE recommended external EMI filter to ensure the convertor's conducted EMI levels comply with EN55032 Class A limits. The EMI measurements are performed with resistive loads at maximum rated loading.

Sample of EN55032 conducted EMI measurement at 115Vac input.

Note: Red Line refers to Quasi Peak margin, which is 6dB below the CISPR international limit. Pink Line refers to the Average margin, which is 6dB below the CISPR international limit.

ENVIRONMENTAL SPECIFICATIONS

Operating Temperature

The AIF11WAC-01N series module can operate within specifications with ambient temperature between -40 to +85°C, or baseplate temperate at center location range -40 to +100°C. The power supply warning level is set at 104°C of Temp Mon (refer to Read Temperature via PMBus), and the operating temperature gradient 0.5°C per minute minimum.

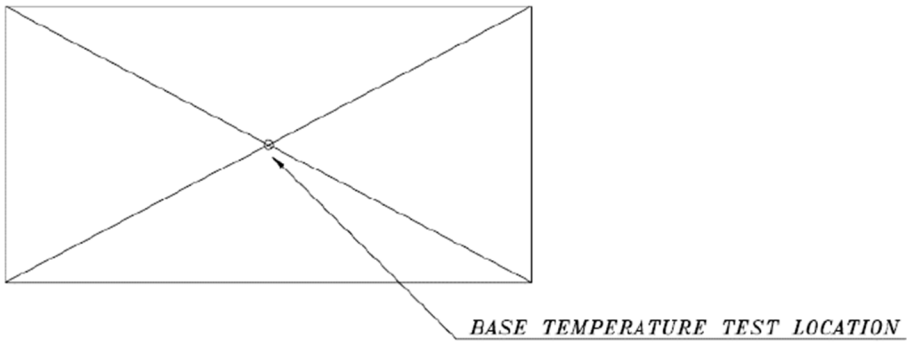

Storage and Shipping Temperature

The AIF11WAC-01N series module can be stored or shipped at temperatures between -40 to +105°C.

Humidity

The AIF11WAC-01N series module can operate within specifications when subjected to a relative humidity from 5 to 90% non-condensing. It exceeds ASHRAR class 2 requirement as below, and the operating humidity temperature gradient 10% per hour minimum.

Operating Temperature Range0	Operating Humidity Range
6 to 10°C	5 to 85% RH
10 to 28°C	10 to 90% RH
29 to 50°C	15 to 50% RH

The AIF11WAC-01N series power supply can be stored in a relative humidity from 5 to 95% at 65°C for 24 hours, non-condensing, and the non-operating humidity temperature gradient 10% per hour maximum.

ENVIRONMENTAL SPECIFICATIONS

Derating Curves

The AIF11WAC-01N can extend the operation down to 85Vac after it's turned on at nominal input voltage range and output power is derated from 504W max to 470W max when operating at 85Vac.

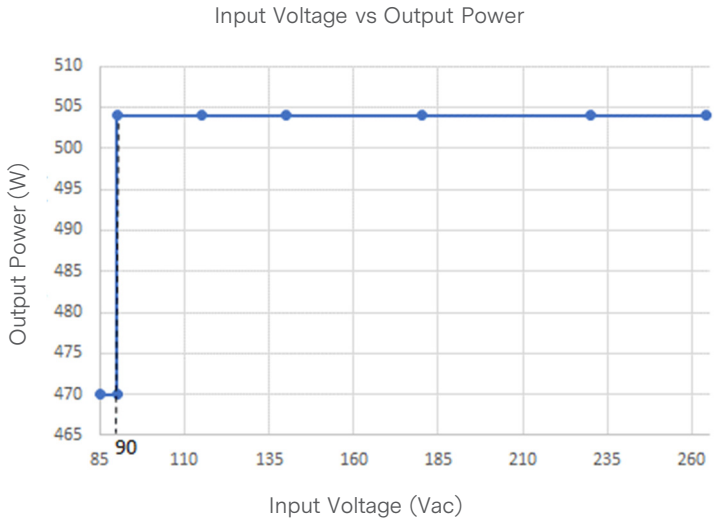

The baseplate at center location is controlled less than 100°C for any operating conditions.

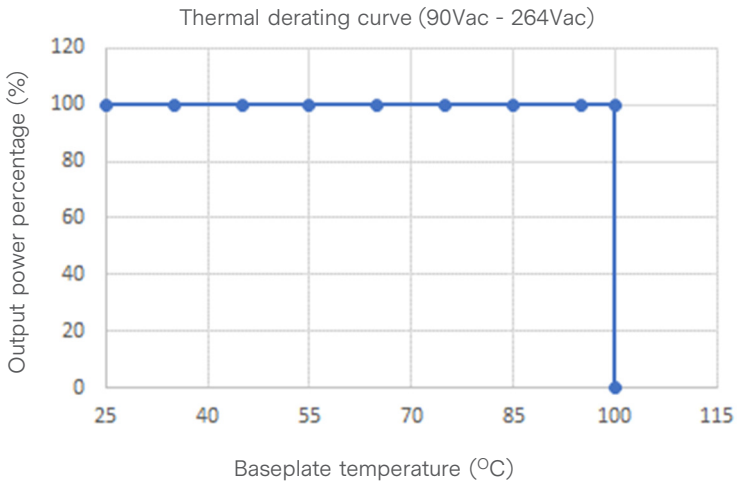

ENVIRONMENTAL SPECIFICATIONS

Vibration

The AIF11WAC-01N series power supply passes the following vibration specifications:

Non-Operating Random Vibration

Acceleration	3.8	gRMS
Duration	30 per axes	Mins
Direction	3 mutually perpendicular axis	

Operating Random Vibration

Acceleration	2.4	gRMS
Duration	30 per axes	Mins
Direction	3 mutually perpendicular axis	

Shock

The AIF11WAC-01N series power supply passes the following shock specifications:

Non-Operating Half-Sine Shock

Acceleration	40	G
Duration	15	mSec
Pulse	Half-Sine	
Number of Shock	3 times in each of 6 faces	

Operating Half-Sine Shock

Acceleration	30	G
Duration	11	mSec
Pulse	Half-Sine	
Number of Shock	3 times in each of 3 axes	

POWER AND CONTROL SIGNAL DESCRIPTIONS

AC Input Pin

These pins provide the AC mains to the AIF11WAC-01N series module.

L1 - AC Input Line / Return
L2 - AC Input Line / Return
HVDC (+) - Primary bulk voltage using for bulk cap positive connection only
HVDC (-) - Bulk cap negative connection only, not primary bulk voltage return

DC Output Pin

These pins provide the main output for the AIF11WAC-01N series module. The "+" and the "-"pins are the output positive and output negative rails. The output (V_O) pins are electrically isolated from the power supply chassis.

O/P (+) - Main 48V Output (Vo)
O/P (-) - Main 48V Output (Vo Return)

Control Signals

The AIF11WAC-01N series module contains a 12 pins control signal header providing an analogue control interface.

SENSE +VE / SENSE -VE - (pins 1,12)

SENS +VE and SENSE -VE are the remote sense signals for 48V main output voltage. This remote sense circuit is designed to compensate for a power path drop of 200mV max on sense line.

SDA - (pin 2)

Serial data line is pulled up to 3.3V with 4.7K ohm resistor internally.

SCL - (pin 3)

Serial clock line is pulled up to 3.3V with 4.7K ohm resistor internally.

I²C ADDRESS - (pin 4)

The I²C ADDRESS pin supports PMBus address selection with multiple modules.

R_address (ohm) , 1%	Address (HEX)
0	70
1240	71
2870	72
4990	73
8060	74
12400	75
20000	76
34800	77
80600	78
open	79

Note: 0x78/0x79 is 7-bit address on this model, system should not use 0x78/0x79 as 10-bit addressing for PMBus communication.

POWER AND CONTROL SIGNAL DESCRIPTIONS

SYNC START - (pin 5)

SYNC START pin is an I/O pin which is pulled high internally when the unit itself is ready and also detect the other units SYNC START pin readiness. If all the parallel units SYNC START pin are in high state, they will turn on simultaneously. This feature is designed for the system presenting a load that is larger than the one AIF module capability to start up without risking the possibility going into the overcurrent protection. If PSU Enable on AIF modules are defaulted ON by the application and different AC sources are used for 1+1, N+1 & N+0 configurations, Vo will only follow the last powered up AC source to turn on when Sync start pins of all modules are tied together.

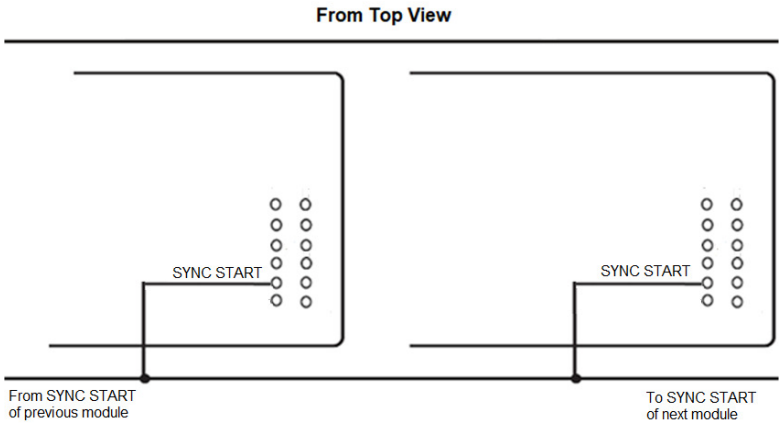

S GND – (pin 6)

The S GND pin is internally connected to the -O/P terminal via a 1ohm resistor, and it's the return pin for control signals.

AUX O/P - (pin 7)

The AUX O/P supports 10V 250mA logic driving but doesn't support current sharing. Over current is triggered when auxiliary output load > 250mA or Cap load > 100µF during N+0 configuration. The maximum output current is 150mA for 1+1 and N+1 applications.

PSU-GOOD - (pin 8)

This signal indicates that the main output voltages are operational. High logic is: 42V < main output < 59.4V. If any of the outputs fail due to over current protection, overvoltage protection, output under voltage, or over temperature protection, then this signal will be driven low.

The PSU-GOOD pin is open drain and internally pulled high by 3.3V. No external pull-up resistor required.

POWER AND CONTROL SIGNAL DESCRIPTIONS

C-SHARE - (pin 9)

Main output current bus for active current sharing used. The C-SHARE pins on each of the sharing group modules need to be connected together.

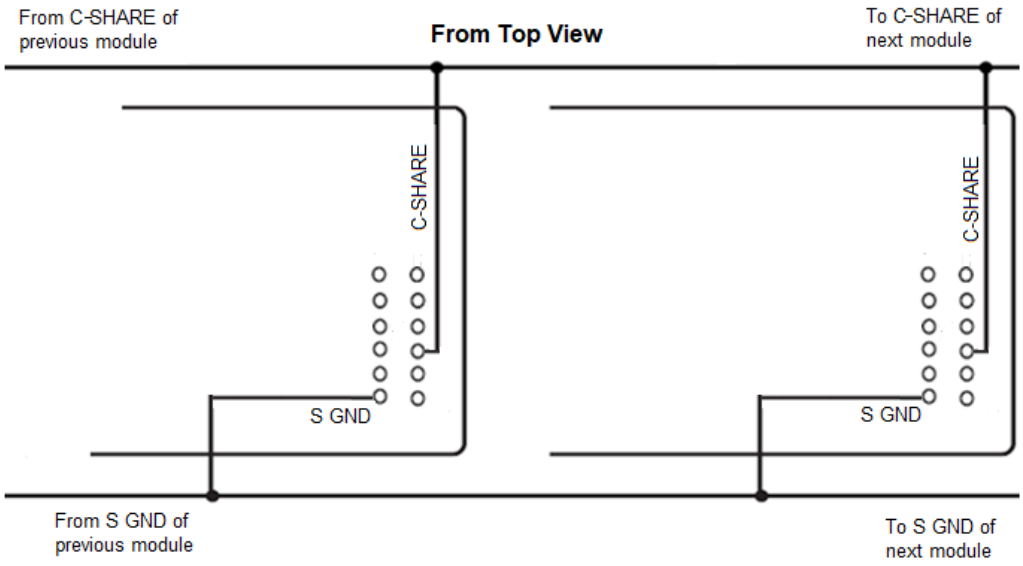

PSU ENABLE - (pin 10)

The enable pin is a LVTTL compatible input used to turn the output of the module on or off.

For module with suffix “N”, the output is enabled when it’s connected to S GND or driven to a logic low < 0.8V (but not negative). The output is disabled when it is open or driven to a logic high > 2.0V.

Note: Some oscillating behavior at around 2V to 3.3V, which is related to internal driving bias, is considered normal behavior and may be seen at PSU ENABLE input signal pin when AC is turned off and PFC bulk voltage is discharged to less than 50V. The behavior at “turn-OFF” does not affect any function and application operation even under AC input ON/OFF cycling condition.

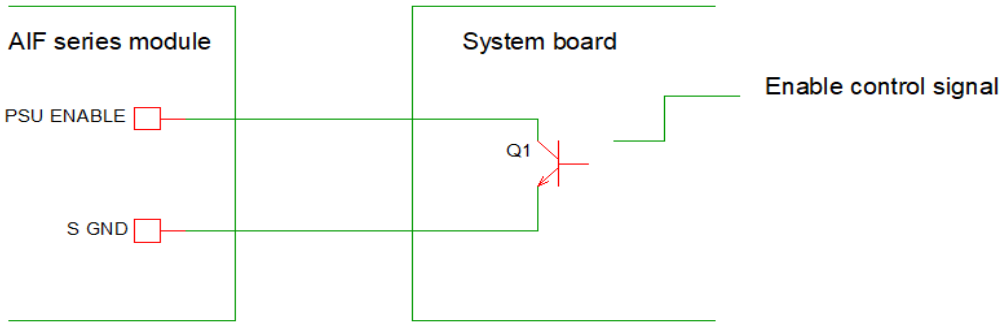

POWER AND CONTROL SIGNAL DESCRIPTIONS

O/P V-ADJ (resistor) (48V defaulted when resistor open) - (pin 11)

The main output voltage can be adjusted from 44V to 56.6V by changing the value of 0.1% resistor (Rtrim) connected from pin O/P V-ADJ to S GND.

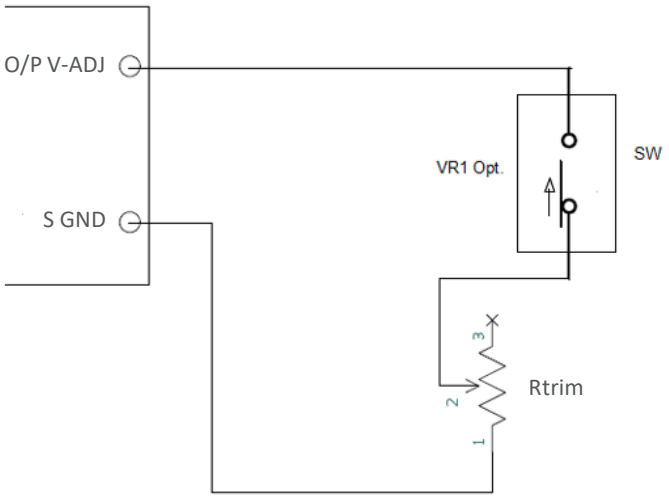

The relation of Vo to Rtrim is below.

$$Vo = \frac{75324.076}{Rtrim + 4518.182} + 39.929$$

Vo is in V

Rtrim is in ohm

Below table shows the typical output voltage vs Rtrim value.

Rtrim (ohm)	Vo (V)
4.8145K or Open	48
14K – 30K	44
0	56.6

To get the tight output voltage tolerance, it's highly recommended that the Rtrim is 0.1% tolerance resistor with good temperature coefficient.

The O/P V-ADJ pin read once the Rtrim value when the AUX O/P are ready, the main output voltage adjustment can be overridden by PMBus after that.

Control Signal Specifications

Control signals are LVTTL signals with 300mV noise (ripple) tolerance. Noise to be measured with 0.1µF bypass capacitor at the measuring point.

Control pin voltage levels:

Input High > 2.2V, Low < 0.8V

Output High > 2.4V, Low < 0.4V

Control pin current levels:

Output Low: 4mA min

PMBus™ Specifications

AIF11WAC-01N Series PMBus™ General Instructions

The AIF11WAC-01N series is compliant with the industry standard PMBus™ protocol for monitoring and control of the power supply via the I²C interface port.

The PMBus™ power derived from the power supplies auxiliary power.

Equipment Setup

The following is typical I²C communication setup:

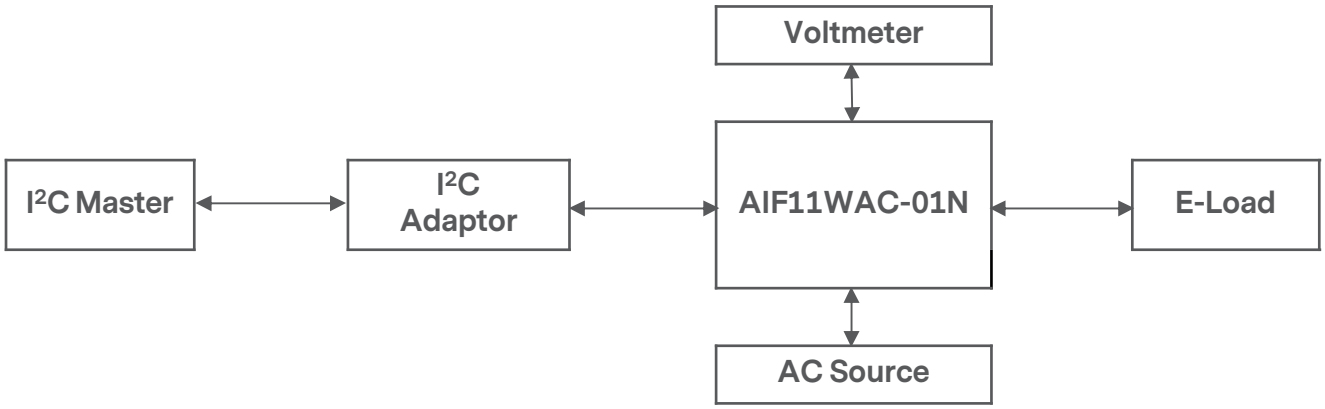

I²C Accuracy

Output Load	Input Voltage	Input Current	Input Power	Output Voltage	Output Current	Output Power
1% to <= 5% Load	±5%	±0.5A	±20W	±2%	±0.25A	±20W
>5% to <=20% Load	±5%	±10%	±10%	±2%	±10%	±10%
>=20% to 100% Load	±5%	±5%	±5%	±2%	±5%	±5%

Note 1 - Nominal input voltage range is 100 to 240Vac unless otherwise noted.
Note 2 - Reported output power can not exceed the reported input power at any output load conditions.

In-System Firmware Upgrade via I²C interfaces

The power supply's microcontroller are designed to support firmware upgrade via I²C interfaces in the system. Upgradeable features support following:

Fault Status behaviors: STATUS_BYTE, STATUS_WORD, STATUS_VOUT, etc.

Timing Control: PS_ON/OFF, PS_OK delay, AC_VIN timing, etc.

MFG report data: MFR_VIN_MIN, MFR_VIN_MAX, etc.

Protection Point: OTP, input/outputs OCP, UVP, OVP, etc.

Auxiliary output remains on during and after firmware update mode, and input power within operating range maintains to provide power to the power supply during this period. Consult AE for the actual implementation of the firmware upgrade procedure.

PMBUS™ SPECIFICATIONS

AIF11WAC-01N Support PMBus™ Command List

The AIF11WAC-01N series module is compliant with the industry standard PMBus™ protocol for monitoring and control of the power supply via the I²C interface port. PEC is supported, PMBUS™ clock speed supports up to 400K bps.

PMBus™ specification revision is 1.2 and SMBus™ specification revision is 2.0.

URL to PMBus™/SMBus™ Org specifications: https://pmbus.org/specification-archives/ and http://smbus.org/specs/

AIF11WAC-01N Supported PMBus™ Command List:

Command Code	Command Name	Default Value	Access Type	Data Bytes	Data Format	Description
00h	PAGE	-	R/W	1	-	Page 0 (main output) Page 1 (auxiliary output)
01h	OPERATION	80	R/W	1	-	Enable/disable output voltage Only support page 0
03h	CLEAR_FAULTS	-	S	-	-	Clear any fault bits that have been set, including IOUT_FOC_TRIGGER Fault bit at command DCh. Support page 0&1
12h	RESTORE_DEFAULT_ALL	-	S	-	-	Load default configuration data to RAM and should use STORE USER ALL command to store the data to internal flash (only under main output off state) Only support page 0
15h	STORE_USER_ALL	-	W	-	-	Save configuration data to internal flash (only under main output off state) Only support page 0
19h	CAPABILITY	80	R	-	Bitmapped	Provides a way for the hosts system to determine some key capabilities of a PMBus™ device Support page 0&1
	b7 - Packet Error Checking	1				0 - PEC not supported 1 - PEC supported
	b6:5 - Maximum Bus Speed	00				00 - Maximum supported bus speed, 100KHz
	b4 - SMBALERT#	0				0 - SMBus Alert Pin not supported 1 - SMBus Alert Pin supported
	b3:0	0000				Reserved
20h	VOUT_MODE	1A	R	-	-	Scaling factor on voltage data for commanding or reading the output voltage Only support page 0
	b7:5 - Mode	000				Data formats for the output voltage and output voltage related parameters
	b4:0 - Parameter	11010				N is a parameter for linear 16.
21h	VOUT_COMMAND[1,2,4]	0000	R/W	2	Linear16	Sends discreet value to change output voltage Only support page 0
40h	VOUT_OV_FAULT_LIMIT[1,2,4,5]	-	R/W	2	Linear16	Sets the VOUT overvoltage fault threshold Only support page 0
44h	VOUT_UV_FAULT_LIMIT[1,2,4,5]	-	R/W	2	Linear16	Sets the VOUT under voltage fault threshold Only support page 0

PMBUS™ SPECIFICATIONS

AIF11WAC-01N Series Supported PMBus™ Command List

Command Code	Command Name	Default Value	Access Type	Data Bytes	Data Format	Description
46h	IOUT_OC_FAULT_LIMIT[1,3,4,5]	-	R/W	2	Linear11	Sets the IOUT over current fault threshold Only support page 0
4Fh	OT_FAULT_LIMIT[1,3,4,5]	-	R/W	2	Linear11	Sets the over temperature fault limit Only support page 0
78h	STATUS_BYTE	-	R	1	Bitmapped	Returns the summary of critical faults Support page 0&1
	b7 - BUSY					A fault was declared because the device was busy and unable to respond
	b6 - OFF					This bit is asserted if the unit is not providing power to the output Refer to VOUT_UV_FAULT
	b5 - VOUT_OV_Fault					An output overvoltage fault has occurred >= 61.2Vdc, the status is latched
	b4 - IOUT_OC_Fault					An output over current fault has occurred. (>=12.6A)
	b3 - VIN_UV_Fault					An input undervoltage fault has occurred 79Vac: Undervoltage fault 85Vac: Recovery
	b2 - TEMPERATURE					A temperature fault or warning has occurred. Reserved
	b1 - CML					A communication, memory or logic fault has occurred Refer to STATUS_CML
	b0 - NONE OF THE ABOVE					A fault or warning not listed in bits [7:1] has occurred
79h	STATUS_WORD	-	R	2	Bitmapped	Summary of units fault and warning status Support page 0&1
	b15 - VOUT					An output voltage fault or warning has occurred
	b14 - IOUT					An output current or power fault or warning has occurred
	b13 - INPUT					An input voltage, current or power fault or warning as occurred
	b12 - MFR_SPECIFIC					A manµFacture specific fault or warning has occurred. Reserved
	b11 - POWER_GOOD#					The POWER_GOOD signal is de-asserted
	b10 - OTHERS					A bit in STATUS_OTHER is set. Reserved
	b9:8 - UNKNOWN					A fault or warning not listed in bits [15:1] has occurred. Reserved
	b7 - BUSY					A fault was declared because the device was busy and unable to respond

PMBUS™ SPECIFICATIONS

AIF11WAC-01N Series Supported PMBus™ Command List

Command Code	Command Name	Default Value	Access Type	Data Bytes	Data Format	Description
79h	b6 - OFF					This bit is asserted if the unit is not providing power to the output Refer to VOUT_UV_FAULT
	b5 - VOUT_OV_FAULT					An output overvoltage fault has occurred >= 61.2Vdc, the status is latched
	b4 - IOUT_OC_FAULT					An output over current fault has occurred. (>=12.6A)
	b3 - VIN_UV_FAULT					An input undervoltage fault has occurred 79Vac: Undervoltage fault. 85Vac: Recovery
	b2 - TEMPERATURE					A temperature fault or warning has occurred Reserved
	b1 - CML					A communication, memory or logic fault has occurred Refer STATUS_CML
	b0 - NONE OF THE ABOVE					A fault or warning not listed in bits [7:1] has occurred
7Ah	STATUS_VOUT	-	R	1	Bitmapped	Support page 0&1
	b7 - VOUT Overvoltage Fault	-				Output over voltage fault >= 61.2Vdc, the status is latched
	b6 - VOUT Overvoltage Warning	-				Reserved
	b5 - VOUT Under Voltage Warning					Reserved
	b4 - VOUT Under Voltage Fault					Output under voltage fault 40.3Vdc fault, 41.8Vdc normal
	b3:0					Reserved
7Bh	STATUS_IOUT		R	1	Bitmapped	Support page 0&1
	b7 - IOUT Over Current Fault					Output over current fault >=12.6A
	b6 - IOUT OC and LV Fault					Output over current and low voltage fault
	b5 - IOUT Over Current Warning					Output over current fault warning. Keep the same as output over current fault
	b4:0					Reserved

PMBUS™ SPECIFICATIONS

AIF11WAC-01N Series Supported PMBus™ Command List

Command Code	Command Name	Default Value	Access Type	Data Bytes	Data Format	Description
7Ch	STATUS_INPUT		R	1	Bitmapped	Input related faults and warnings
	b7 - VIN_OV_FAULT					Input overvoltage fault 285Vac: Overvoltage fault 267.5Vac: Recovery
	b6 - VIN_OV_WARNING					Input overvoltage warning
	b5 - VIN_UV_WARNING					Input under voltage warning
	b4 - VIN_UV_FAULT					Input under voltage fault 79Vac: Under voltage fault 85Vac: Recovery
	b3 - Unit Off For Low Input Voltage					This bit will set if VIN_UV_FAULT is occurred If input voltage never exceeded the input turn-on threshold, ONLY THIS BIT WILL SET
	b2:0					Reserved
7Dh	STATUS_TEMPERATURE		R	1	Bitmapped	Temperature related faults and warnings
	b7 - Over Temperature Fault					Over temperature fault 108°C: Over temperature fault 80°C: Recovery
	b6 - Over Temperature Warning					Reserved
	b5:0					Reserved
7Eh	STATUS_CML		R	1	Bitmapped	Communications, logic and memory
	b7 - Invalid/Unsupported command					Invalid or unsupported command received
	b6 - Invalid/Unsupported Data					Invalid or unsupported command received
	b5 - PEC Error					Packet error check failed
	b4 - Memory Fault Detected					CRC of memory that does not match the initial CRC value
	b3:2					Reserved
	b1					A communication fault other than the ones listed in this table has occurred
	b0					Other Memory or Logic Fault has occurred
88h	READ_VIN		R	2	Linear	Returns input voltage in Volts Required range is 0 to 310Vac
89h	READ_IIN		R	2	Linear	Returns input current in Amperes Required range is 0 to 15A
8Bh	READ_VOUT		R	2	Linear	Returns the actual, measured voltage in Volts Required range is 0 to 67.2Vdc
8Ch	READ_IOUT		R	2	Linear	Returns the output current in amperes. Required range is 0 to 25A
8Dh	READ_TEMPERATURE_1		R	2	Linear	Returns the baseplate temperature in degree Celsius Required range is -50 to 125°C

PMBUS™ SPECIFICATIONS

AIF11WAC-01N Series Supported PMBus™ Command List

Command Code	Command Name	Default Value	Access Type	Data Bytes	Data Format	Description
96h	READ_POUT		R	2	Linear	Returns the output power, in Watts. Required range is 0 to 800W
97h	READ_PIN	42	R	2	Linear	Returns the input power, in Watts Required range is 0 to 800W
98h	PMBUS_REVISION		R	1	Bitmapped	PMBUS protocol revision The revision 1.2 in hex is 0x42
99h	MFR_ID	AEI	BR/BW	Varies	ASCII	ManµFacture name, It's ASCII code.
9Ah	MFR_MODEL	AIF11WAC-01N	BR/BW	Varies	ASCII	ManµFacture model name,it's ASCII code
9Bh	MFR_REVISION	XX	BR/BW	Varies	ASCII	X: 0-9 and A-Z, it's ASCII code
9Ch	MFR_LOCATION	PH	BR/BW	Varies	ASCII	MFG Name
9Dh	MFR_DATE	YYMMDD	BR/BW	Varies	ASCII	YY- year, MM- Month, DD-Day
9Eh	MFR_SERIAL		BR	Varies	ASCII	20 ASCII codes
A0h	MFR_VIN_MIN	F8C8	R	2	Linear11	Minimum input voltage (100Vac)
A1h	MFR_VIN_MAX	F3C0	R	2	Linear11	Maximum input voltage (240Vac)
A2h	MFR_IIN_MAX		R	2	Linear	Maximum input current (8A)
A3h	MFR_PIN_MAX		R	2	Linear	Maximum input power (600W)
A4h	MFR_VOUT_MIN	0B00	R	2	Linear16	Minimum output voltage Regulation window (44Vdc)
A5h	MFR_VOUT_MAX	0E26	R	2	Linear16	Maximum output voltage Regulation window (56.64Vdc)
A6h	MFR_IOUT_MAX		R	2	Linear	Maximum output current (10.5A)
A7h	MFR_POUT_MAX		R	2	Linear	Maximum output power (504W)
A8h	MFR_T_BASEPLATE_MAX		R	2	Linear	Maximum baseplate temperature 125°C
A9h	MFR_T_BASEPLATE_MAX		R	2	Linear	Minimum baseplate temperature -40°C
D0h[1]	MAIN_VOUT_OVERRIDDEN	55	R/W	1	Hex	0x55: HW Resistor Adjustment 0xAA: PMBus VOUT_COMMAND Other values: reserved Get current setting of output voltage Adjustment 0x55: HW Resistor Adjustment (Default) 0xAA: PMBus VOUT_COMMAND Other values: reserved
D5h	MFR_ SPECIFIC_05	MNNN XYYYY	BR	10	ASCII	MNNN: Returns the PS FW revision Primary side major and minor rev XYYYY: Returns the PS FW revision Secondary / PMBus MCU major and minor rev Fill Blank Bytes with ASCII Space char if needed

PMBUS™ SPECIFICATIONS

Note:

1: System/user needs to disable main output by PSU ENABLE pin or OPERATION OFF command first, and use "STORE_USER_ALL" (15h) command to store data to internal flash for below writeable commands, otherwise, the updated data will be lost in next power supply power up.

Command Code	Command Name	Data Format
21	VOUT_COMMAND	Linear16
40	VOUT_OV_FAULT_LIMIT	Linear16
44	VOUT_UV_FAULT_LIMIT	Linear16
46	IOUT_OC_FAULT_LIMIT	Linear11
4F	OT_FAULT_LIMIT	Linear11
D0	MAIN_VOUT_OVERRIDDEN	Hex

2: For the Linear16 data format of above commands(21h, 40h, 44h), the calculation formula between the real value and the hex value follows as below.

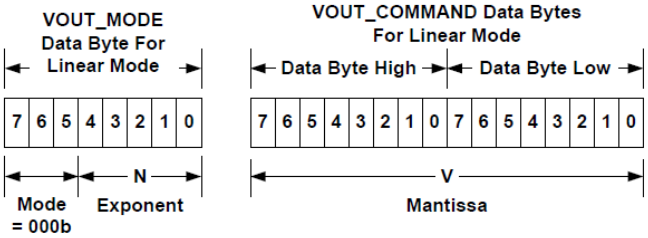

Figure 7. ULINEAR16 Format Data Bytes

The Mode bits are set to 000b.

The Voltage, in Volts, is calculated from the equation:

$$Voltage = V \times 2^{N}$$

Where:

Voltage is the parameter of interest in Volts;

V is a 16 bit unsigned binary integer; and

N is a 5 bit two's complement binary integer.

Note that for the VOUT_MODE command, the reading data is a constant of 0x1A(000b=Linear mode, 11010b=N is -6)

3: For Linear 11 data format, the calculation formula between the real value and the hex value follows as below.

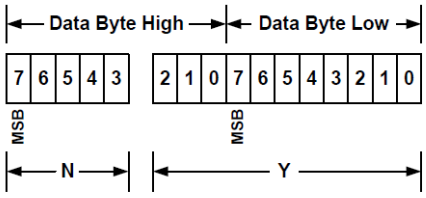

Figure 4. LINEAR11 Numeric Format Data Bytes

The relation between *Y*, *N* and the "real world" value is:

$$X = Y \cdot 2^{N}$$

Where, as described above:

X is the "real world" value;

Y is an 11 bit, two's complement integer; and

N is a 5 bit, two's complement integer.

Devices that use the LINEAR11 format must accept and be able to process any value of *N*.

PMBUS™ SPECIFICATIONS

4: System/user needs to write reasonable data (not out of default setting) for those commands(21h, 40h, 44h, 46h, 4Fh), otherwise, the power supply will ignore the data and set INVALID DATA bit of STATUS CML

5: The fault limits (for example, output OC limit, output OV limit) are for main output only. The fault detection of auxiliary output as below:

a) A hardware interrupt is for OCP detection of auxiliary output
b) >12.8V(auxiliary output OVP set); <12.6V(auxiliary output OVP reset)

APPLICATION NOTES

Recommended External EMI Filter

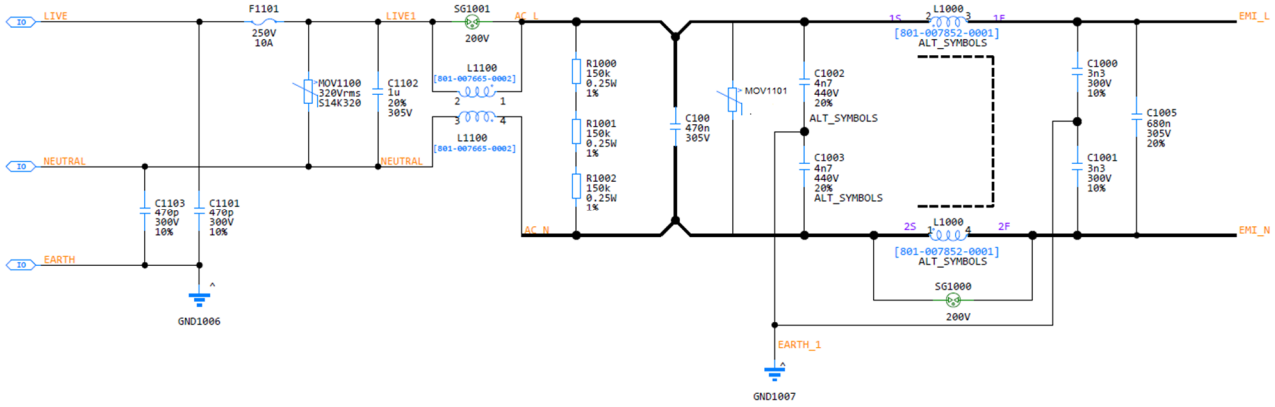

Recommended L1000 and L1100

Component	L1000	L1100
Manufacture P/N	Toroid TL10	Toroid VITROPERM 500 F
Turn ratio	25:25	16:16
Wire gauge (mm)	Dia. 1.1	Dia. 1.0
Dimension (mm)	28.2 x 19.9 x 30	26 x 14.2 x 27.2
Inductance	5 to 9.6mH	11 to 21mH
Schematic	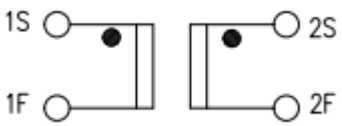	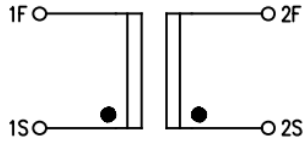
Drawing	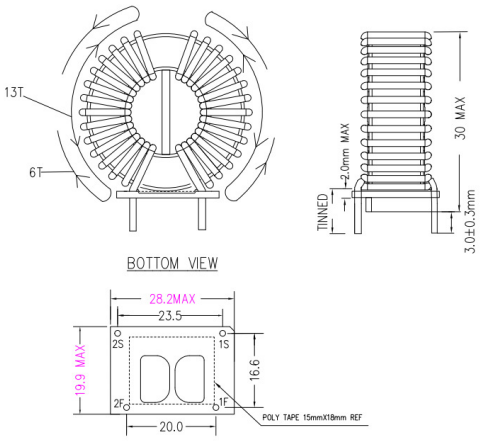	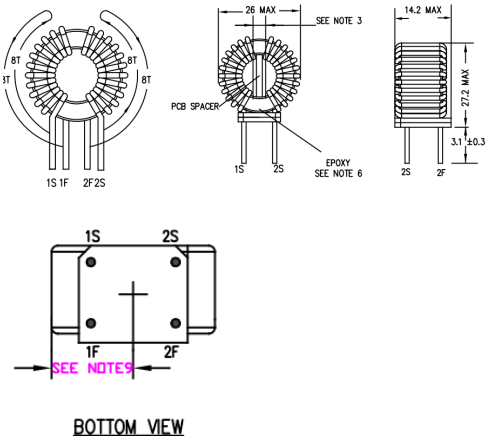

Note: The common mode choke L1000 and L1100 can be placed horizontally.

APPLICATION NOTES

Recommended External EMI Filter

Recommended L1000 and L1100

The external circuit below is used for input surging protection to meet 1KV differential & 2KV common mode of line transient requirement, and can be included into the EMI circuit.

Recommended SG1001/SG1000: WPSPG-20M 200, World Products Inc.

Recommended GDT1005: Y08SV-312BTR, Sankosha Corp.

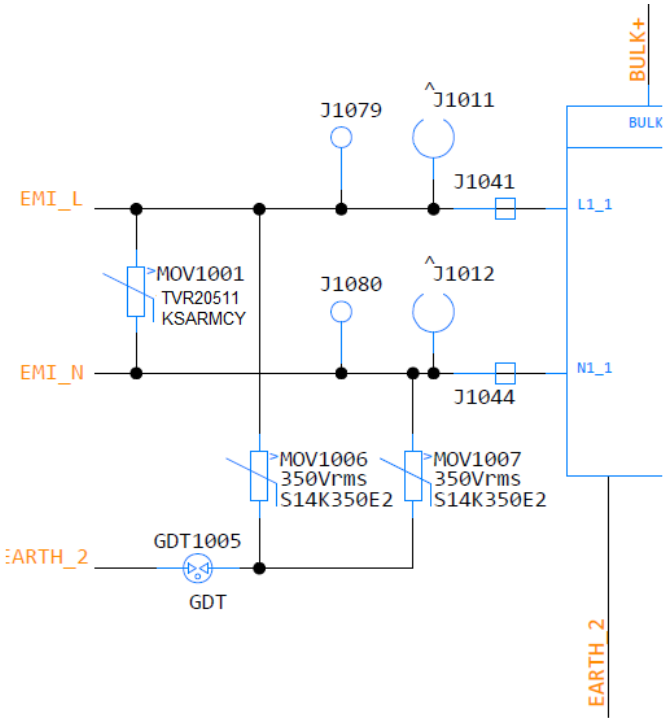

APPLICATION NOTES

Recommended EMC components:

Component	Manufacturer	Manufacturer P/N
SG1001/SG1000	World Products Inc.	WPSPG-20M 200
GDT1005	Sankosha Corp.	Y08SV-312BTR
MOV1001,MOV1100[1]	Thinking Electronic Industrial Co., Ltd.	TVR20511KSARMCY
MOV1006,MOV1007	Thinking Electronic Industrial Co., Ltd.	TVR14561KSY
C1102	Hua Jung Components Co., Ltd	MKP-105K0305AB1151-P
C1101,C1103	TDK Corporation	CS45-B2GA471K-GKA
C1005	Kemet Electronics Corporation	F863DN684M310ALW0L
C1004	Xiamen Faratronic Co. Ltd.	C42Q2474K90C000
C1002,C1003	Dongguan Walsin Technology Electronics Co., Ltd.	YU1AC472M120DAFD7H
C1000,C1001	Vishay BC components	BFC233868136

Note 1 - To meet Lightning Surge option 2 requirement, please update MOVs configuration as the table below.

MOV1100	MOV1101	MOV1001
2pcs SR471K20ES in parallel, Walsin Technology Corporation	1pcs SR471K20ES, Walsin Technology Corporation	N/A

APPLICATION NOTES

Recommended Capacitor for Loading Board

Minimum required capacitor used on the loading board is 20 x 4.7μF(100V, MURATA, p/n: GRJ31CZ72A475KE01L) and 8 x 56μF(80V, PANASONIC, p/n: 80SXE56M+T).

Select an External Bulk Capacitor

The maximum bulk capacitance is 560μF. Recommend 475V 560μF for 504W application. The output capacitor value is determined by the following factors:

1. RMS ripple current
2. Peak-to-peak output ripple voltage
3. Hold-up time
4. Expected lifetime of the capacitor

The default bulk voltage to disable the main is 310V and it is varied with equation below when bulk voltage is between 395V to 425V.

Vmin = 310V + 1.8333 x (Vbulk – 395V)

RMS Ripple Current

The RMS ripple current for the application should be smaller than maximum permissible RMS ripple current. The ripple current for the PFC module can be approximated as

Irms = (Po/ Eff) x 1/sqrt (Vo x Vrms)

where :

Po = output power (W)

Eff = efficiency (%)

Vo = output voltage (V)

Vrms = input rms voltage (V)

This gives the ripple current at 140kHz. The maximum ripple current for capacitors is usually specified at 120Hz. To convert from 140kHz to 120Hz, the Irms figure should be divided by 1.4.

APPLICATION NOTES

Peak to Peak Output Ripple Voltage

The AC input causes a ripple on the output voltage. The size of the ripple is inversely proportional to the size of the capacitor.

Therefore the maximum allowable ripple voltage should be decided in order to calculate the size of capacitor required. This could be calculated using the following equation:

$Co = Po/ (2\pi f \times Eff_pfc \times Vbulk \times Vripple)$

where :

Co = bulk capacitance (F)

Eff_pfc = PFC efficiency (~0.95)

f = input voltage frequency (Hz)

Vbulk = bulk voltage (V)

Vripple = bulk ripple voltage (V)

Hold-Up Time Requirement

The output capacitor value is different for different hold-up time requirements. The minimum capacitance corresponding to the required hold-up time of a system can be calculated as follows:

$Co,min = (2 \times Po \times Thold)/\{\eta[(Vbulk- Vripple)^2 - (Vmin)^2]\}$

Where :

Co,min = minimum bulk capacitance (F)

Po = main output power (W)

Thold = hold up time (sec)

Vbulk = bulk voltage (V)

Vripple = bulk ripple voltage (V)

Vmin = Voltage to turn off main (V)

η = main efficiency (~0.9)

For example:

To get a 20ms hold up at full load, the $Co,min = (2 \times 504 \times 20 \times 10^{-3}) / \{0.9 \times [(395 – 6.5)^2 - 310^2]\} = 409 \times 10^{-3}$mF, around 410µF.

To get a 30ms hold up at full load, the $Co,min = (2 \times 504 \times 30 \times 10^{-3}) / \{0.9 \times [(395 – 6.5)^2 - 310^2]\} = 613 \times 10^{-3}$mF, around 610µF.

Note:

Bulk voltage and ripple voltage are not fixed. There is dynamic bulk voltage depend on input voltage and output voltage. As the bulk cap tolerance varied with different MPN. The above calculation is for reference only. The actual hold-up time should be measured based on actual operating conditions and bulk cap tolerance should be considered.

APPLICATION NOTES

Current Sharing

The AIF11WAC series main output V_O is equipped with current sharing capability for higher power application. Current sharing between paralleled power supply modules is required to distribute the load evenly between a maximum of 10 units.

Current share accuracy is typically +/-10% of full load from 0-100%.

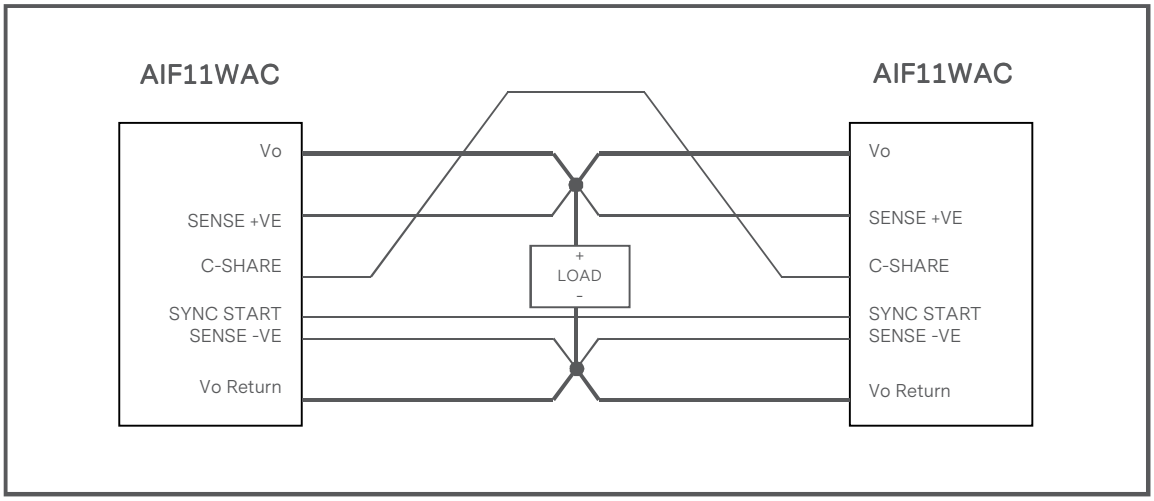

C-SHARE voltage tolerance is ±5% when the output load >20% of full load. C-SHARE voltage tolerance is ±0.1V when the output load <=20% of the full load.

For single unit, the C-SHARE voltage level at no load (0A) is 0.32V typ. and at full load (10.5A) is 5V typ. with linear function. The calculation formula of C-SHARE voltage is (445.71mV*Io)+0.32V, diagram showing as below.

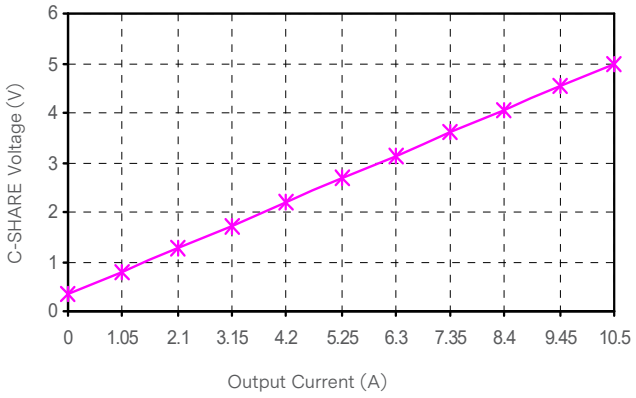

APPLICATION NOTES

1+1 Redundancy Configuration

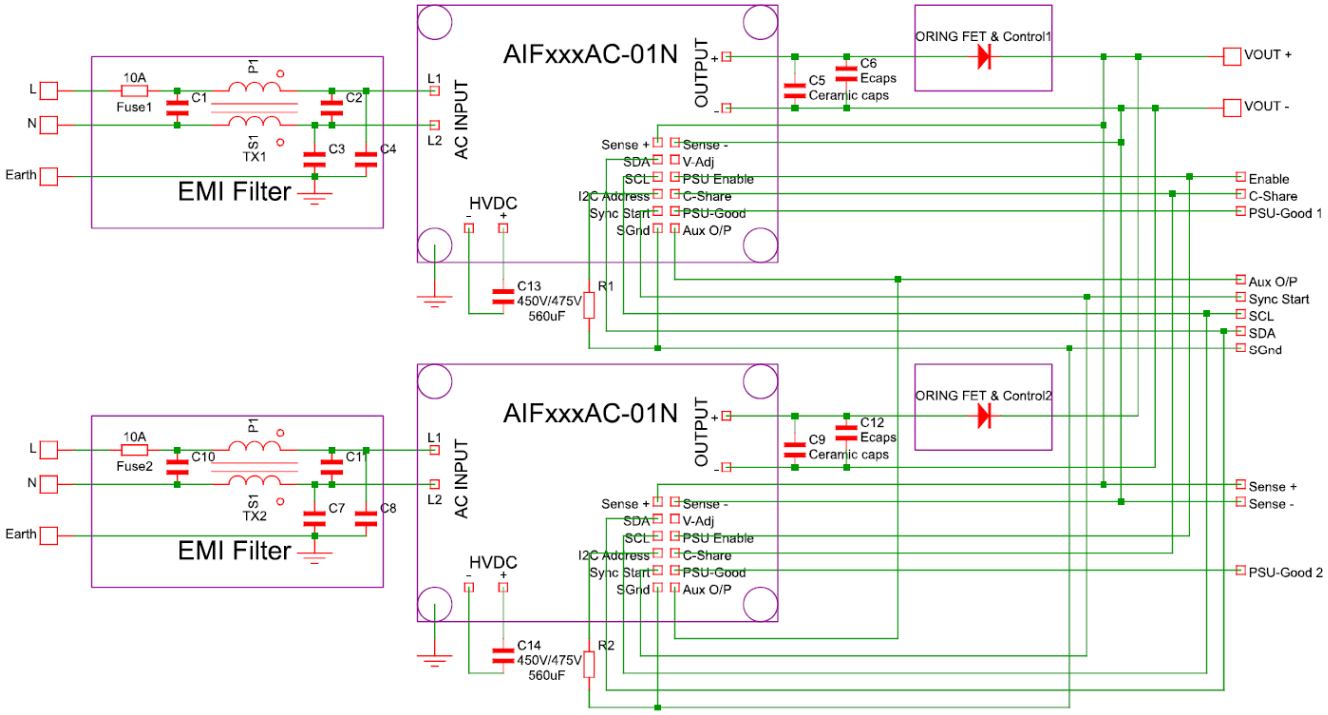

1+1 Common EMI Filter Redundancy Configuration

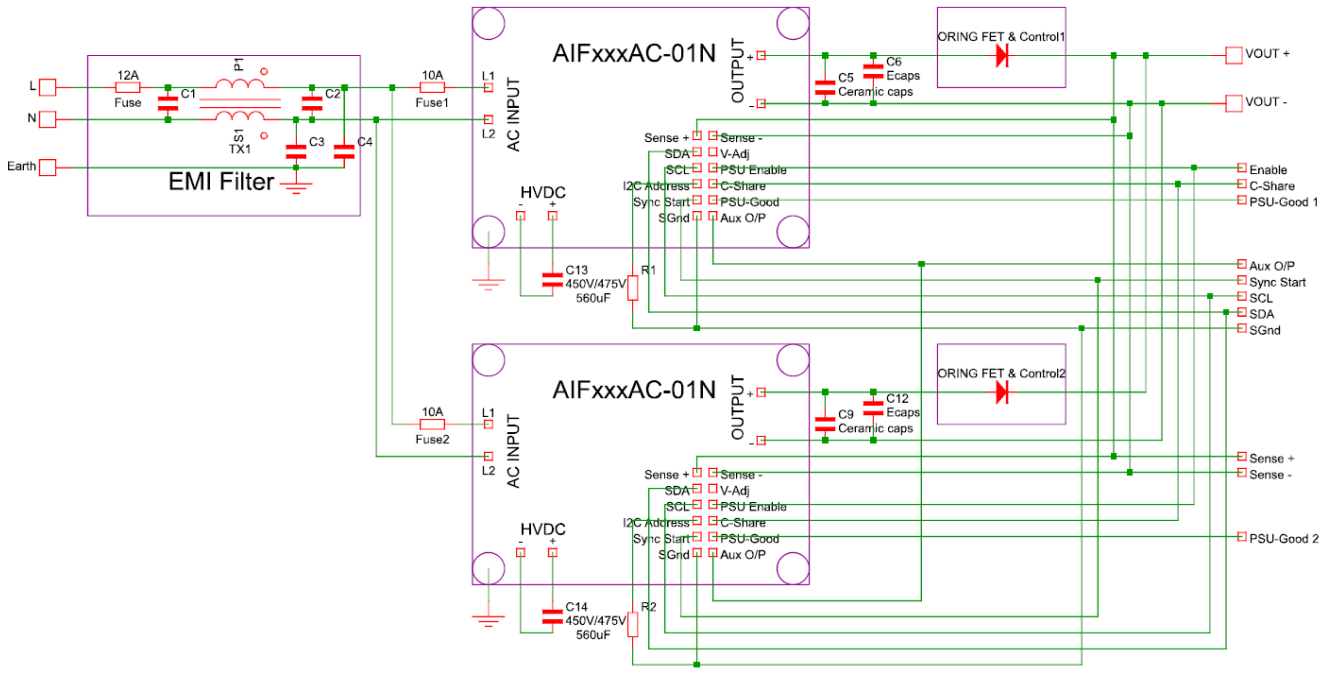

APPLICATION NOTES

N+1 Redundancy Configuration

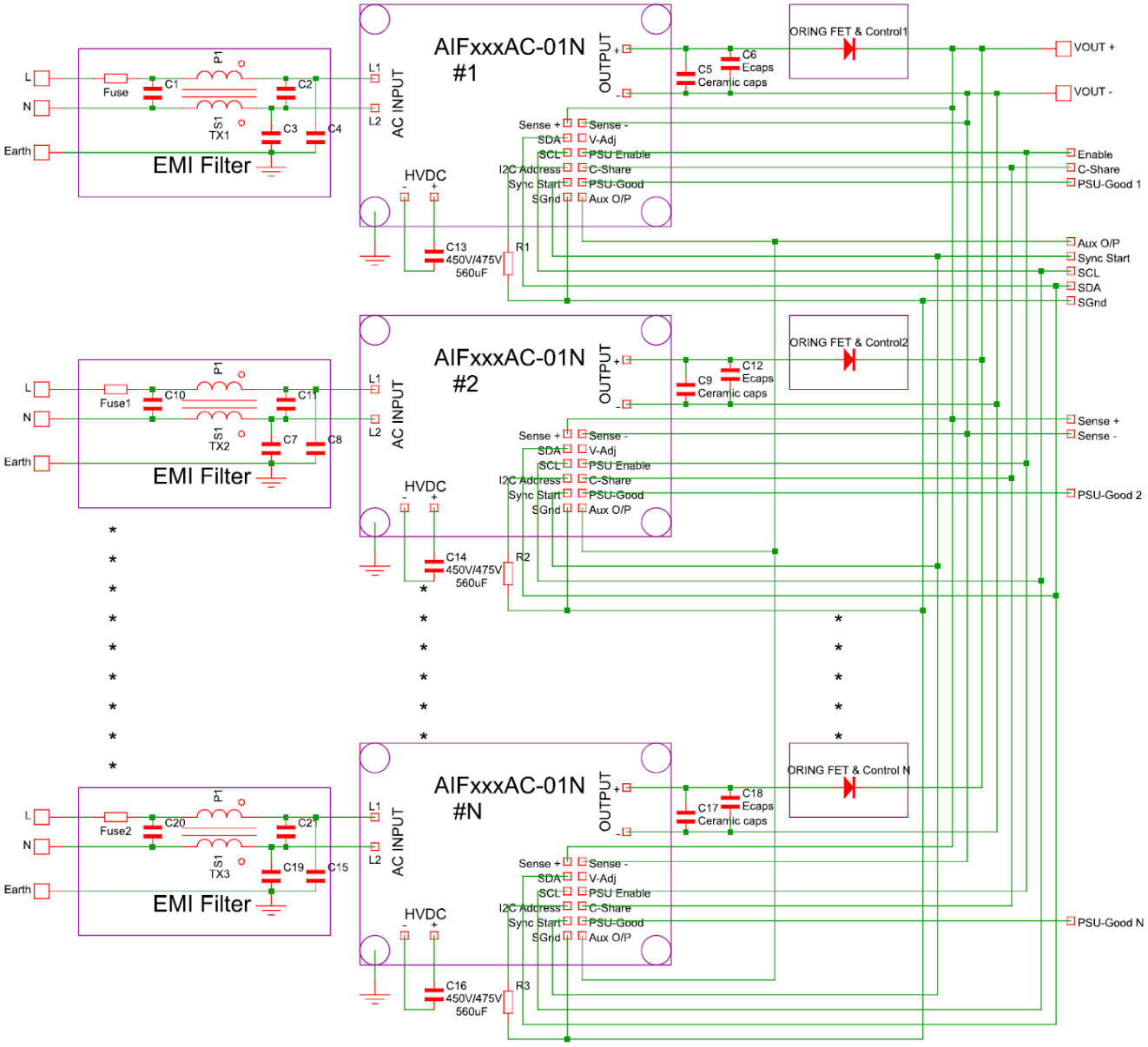

APPLICATION NOTES

2+0 Configuration

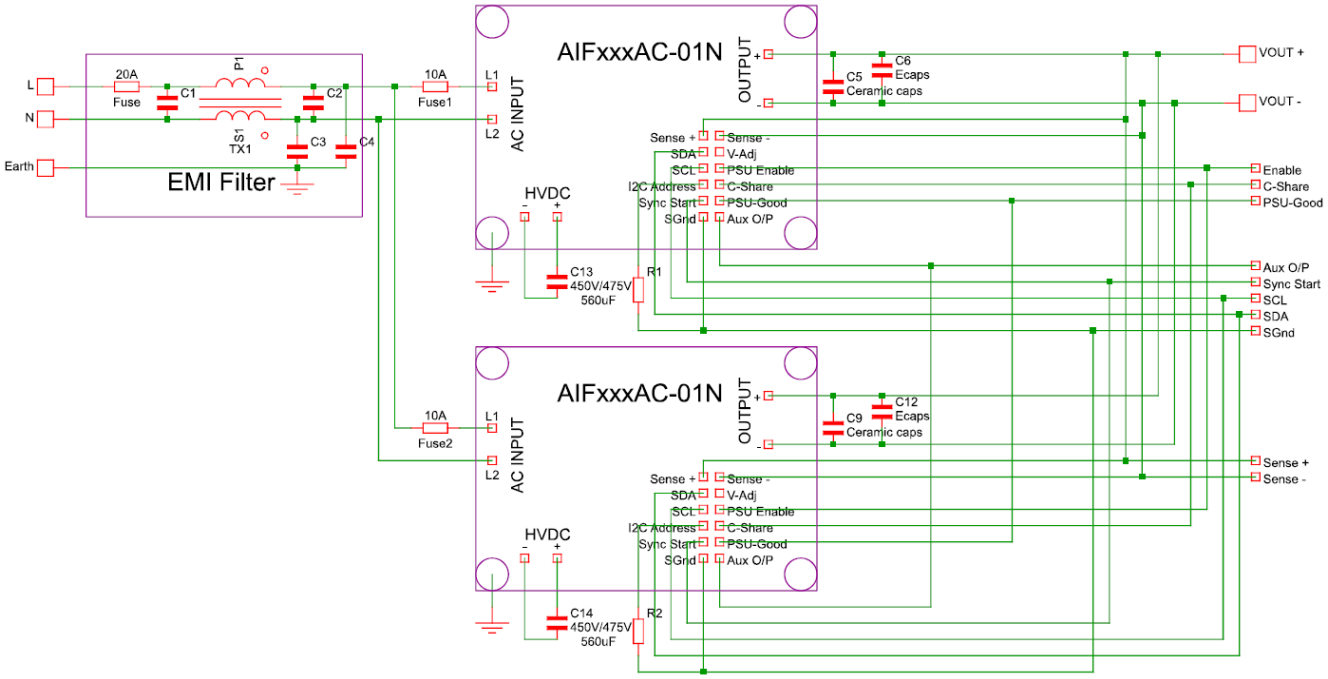

APPLICATION NOTES

Single Unit Diagram

The AIF11WAC series single unit diagram shows as below.

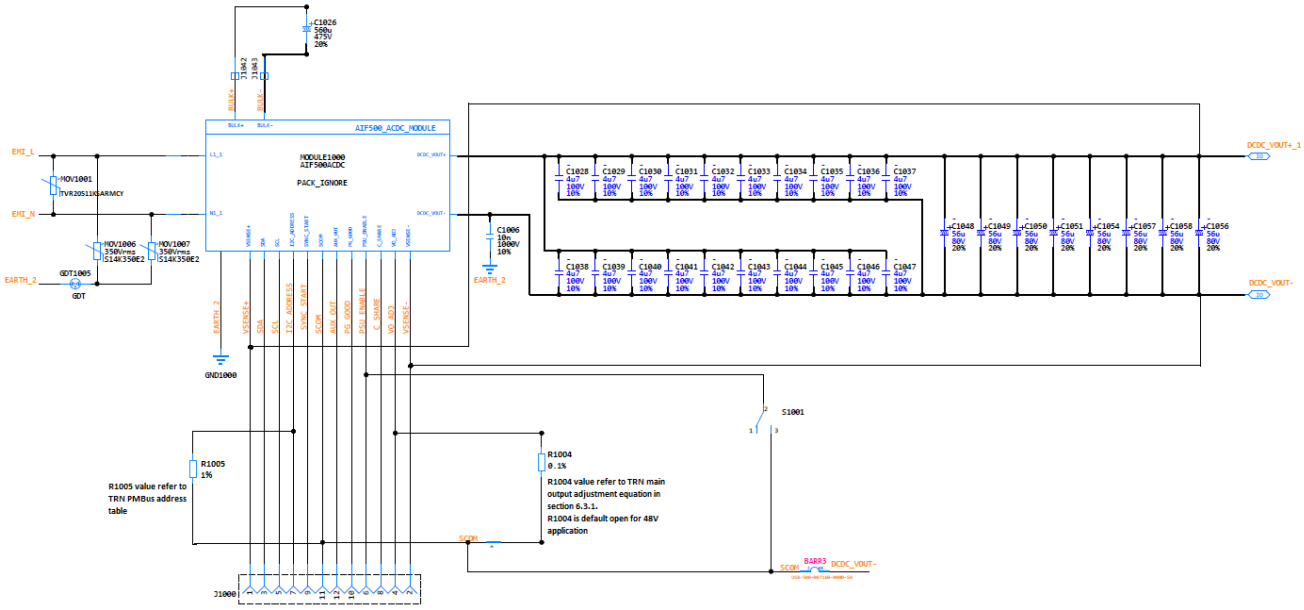

Single Unit BOM

Component	Details
C1048, C1049, C1050, C1051, C1054, C1056, C1057, C1058	56µF,80Vdc,20%,-20%,10 X 13
C1028, C1029, C1030, C1031, C1032, C1033, C1034, C1035, C1036, C1037, C1038, C1039, C1040, C1041, C1042, C1043, C1044, C1045, C1046, C1047	CER,X7R,4.7µF,100Vdc,10%,-10% (Recommend to place these ceramic caps close to the main output connection pins)
C1026	560µF,475Vdc,20%,-20%,TBD
C1006	X7R,10nF,1000Vdc,10%,-10%,1210
MOV1006	MOV,S14K350E2,930V,0.6W,14mm,7.5mm
MOV1007	MOV,S14K350E2,930V,0.6W,14mm,7.5mm
GDT1005	SUPR,GDT,2850 - 3500,8mm,DUAL
MOV1001	MOV,TVR20511KSARMCY, 320Vrms, 410Vdc, 1W, 20mm, 7.5mm
R1004, R1005	4.87KΩ,0.1W,0.1%,25ppm [TC]

APPLICATION NOTES

Package Information

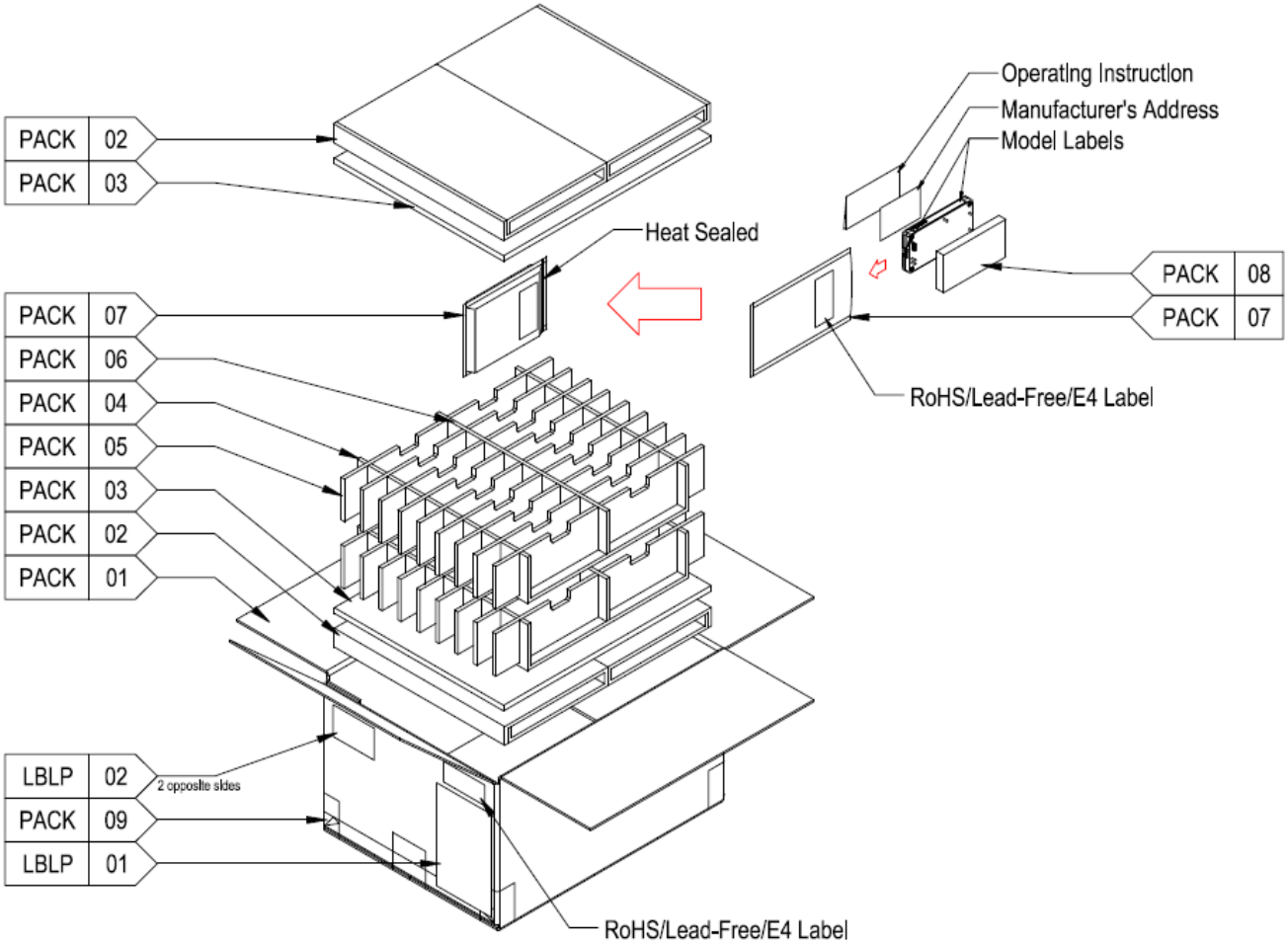

Individual carton details:

1. Outside dimensions of carton box 406 (L) x 335 (W) x 266 (H) mm
2. 32 units per carton box
3. Unit weight: 0.26kg, approx.
4. Gross weight: 9kg, approx.

APPLICATION NOTES

Output Ripple and Noise Measurement

The setup outlined in the diagram below has been used for output voltage ripple and noise measurements on the AIF11WAC-01N series module. When measuring output ripple and noise, a scope jack in parallel with a 0.1µF ceramic chip capacitor, and a 10µF aluminum electrolytic capacitor should be used. Oscilloscope should be set to 20MHz bandwidth for this measurement.

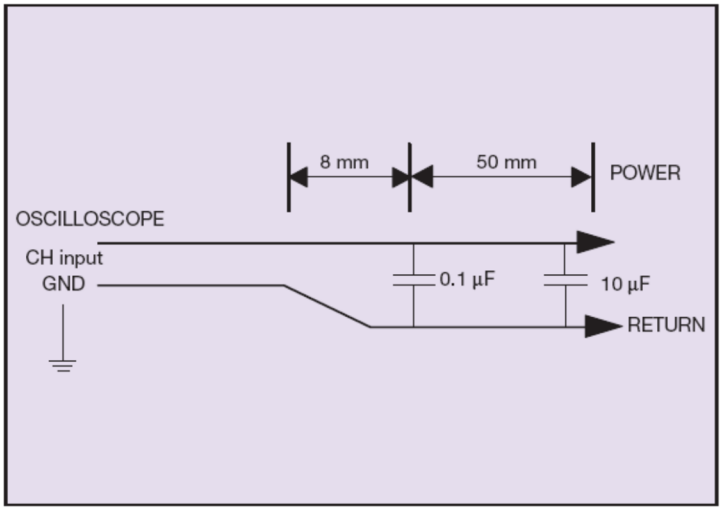

RECORD OF REVISION AND CHANGES

Issue	Date	Description	Originators
1.0	09.27.2022	First Issue	K. Ma
1.1	11.25.2022	Add Performance Curves	K. Ma
1.2	03.01.2023	Update Mechanical Drawing	K. Ma
1.3	05.26.2023	Update PSU ENABLE Description Add Recommend SG1001, SG1000 and GDT1005 MPN Info	K. Ma
1.4	07.06.2023	Add the EMC Components Table	K. Ma
1.5	09.01.2023	Update No Load Input Current Update PSU-GOOD Signal Voltage / Current Levels Update the unit of inductance value for L1100	K. Ma
1.6	10.23.2023	Add L1000 and L1100 mechanical data Align signal pin's name same as real power supply Add some notes	K. Ma
1.7	12.20.2023	Add block diagram of 1+1, 2+0, N+1 applications	A. Zhang
1.8	01.08.2024	Update leakage current limit value	K. Ma
1.9	03.09.2024	Add note for 0x78/0x79 I2C address	K. Ma
2.0	07.01.2024	Update system timing diagram	K. Ma
2.1	09.04.2024	Update MTBF to CMTBF Add CMTBF vs Temperature Curve	K. Ma
2.2	11.13.2024	Update Lighting Surge capability	K. Ma

ABOUT ADVANCED ENERGY

Advanced Energy (AE) has devoted more than three decades to perfecting power for its global customers. AE designs and manufactures highly engineered, precision power conversion, measurement and control solutions for mission-critical applications and processes.

Our products enable customer innovation in complex applications for a wide range of industries including semiconductor equipment, industrial, manufacturing, telecommunications, data center computing, and medical. With deep applications know-how and responsive service and support across the globe, we build collaborative partnerships to meet rapid technological developments, propel growth for our customers, and innovate the future of power.

PRECISION | POWER | PERFORMANCE | TRUST

For international contact information,
visit advancedenergy.com.

powersales@aei.com (Sales Support)
productsupport.ep@aei.com (Technical Support)
+1 888 412 7832

Specifications are subject to change without notice. Not responsible for errors or omissions. ©2020 Advanced Energy Industries, Inc. All rights reserved. Advanced Energy®, and AE® are U.S. trademarks of Advanced Energy Industries, Inc.

AIF11WAC-01N - Rev 11.13.24_#2.2