ARTESYN ALD15 SERIES

15 Amps

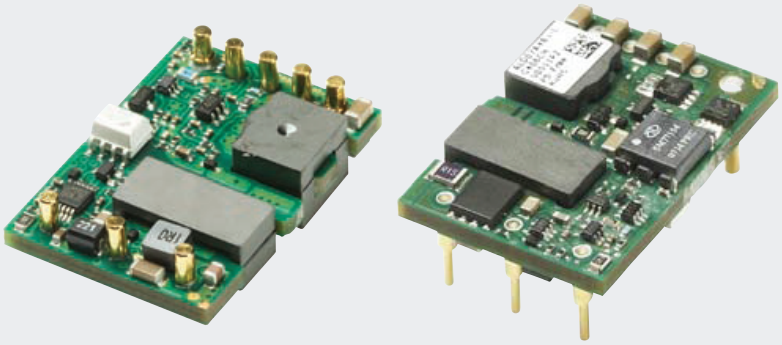

The ALD series of sixteenth-brick isolated DC-DC converters comprises seven single output models offering fully regulated voltages of 1.2 V, 1.5 V, 1.8 V, 2.5 V, 3.3 V, 5.0 V or 12.0 V. The 1.2 V and 1.5 V models can deliver up to 15 amps. These converters have a wide 2:1 input range of 36 to 75 Vdc and are designed primarily for use with standard 48 V telecommunications equipment supplies. Rated at 35 watts, they employ an open-frame construction, offer up to 91% efficiency and accommodate an ambient operating temperature range of -40 to 85˚C. The converters use fixed frequency switching to minimize the need for EMI filtering.

DATA SHEET

Total Power:

35 Watts

Input Voltage:

48 V

# of Outputs:

Single

SPECIAL FEATURES

- High efficiency
- -40 °C to +75 °C ambient air operation
- 1.30” x 0.90” x 0.35” TH or SMT package
- High capacitive load limit on start-up
- Industry standard feature sets: UVLO, OVP, OCP, OTP, on/off enable, remote sense, output trim
- Basic insulation
- Regulation to zero load
- Fixed frequency switching
- EU Directive 2002/95/EC compliant for RoHS

SAFETY

- UL, cUL: 60950-1
- TUV: EN60950-1

©2020 Advanced Energy Industries, Inc.

ELECTRICAL SPECIFICATIONS

Input	
Input range	36 to 76 Vdc
Input surge	100 V / 100 ms
Efficiency	90.5% @ 12 V
Output	
Line regulation	±0.1% Vo (typical)
Load regulation	±0.1% Vo (typical)
Noise/ripple1	40 mVp-p (typical)
Remote sense	Up to 10% of Vo
Transient response	3% Vo (typical deviation 50% to 75% load change 80 µs setting time (typical)
Overvoltage protection	125% Vo typical (autorecovery)
Overcurrent protection	115% Io typical (autorecovery)
Overtemperature protection	115 °C average PCB temperature (autorecovery)
Switching frequency	Fixed frequency
Isolation voltage	1500 Vdc minimum (2000 Vdc ALD10F48N)
Isolation	
Voltage adjust	90 - 100% Vo
Enable	TTL compatible

ENVIRONMENTAL SPECIFICATIONS

Operating ambient temperature range	-40 °C to +85 °C
Storage temperature	-40 °C to +125 °C
MTBF	1 million hours

ORDERING INFORMATION

Model Number	Input Voltage	Output Voltage	Output Current	Efficiency2
ALD03B48(N)-(L)/(6L)/(SL)	36 - 75 V	12 V	2.75 A	90.5%
ALD07A48(N)-(L)/(6L)/(SL)	36 - 75 V	5.0 V	7.00 A	91%
ALD10F48(N)-(L)/(6L)/(SL)	36 - 75 V	3.3 V	10.00 A	90%
ALD11G48(N)-(L)/(6L)/(SL)	36 - 75 V	2.5 V	11.00 A	89%
ALD13Y48(N)-(L)/(6L)/(SL)	36 - 75 V	1.8 V	13.00 A	87%
ALD15M48(N)-(L)/(6L)/(SL)	36 - 75 V	1.5 V	15.00 A	85%
ALD15K48(N)-(L)/(6L)/(SL)	36 - 75 V	1.2 V	15.00 A	84%

Notes:
Efficiency values taken at nominal imput full load condition, 25 °C ambient temperature.
Options:
"N" = Designates Negative Logic Enable (default is Positive Enable with no suffix "N" required)
"L" = RoHS compliant
"-6L" = 3.7 mm nominal pin length (default is 5 mm nominal pin length with no suffix "-6" required), RoHS compliant
"-SL" = Surface Mount Termination (default is thru hole termination with no suffix "-S" required) RoHS compliant. STRL designates Taped and Reeled option for SMT.

MECHANICAL DRAWINGS

Through-hole Termination

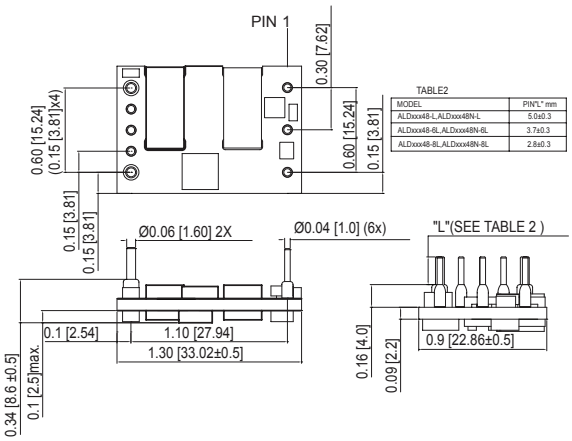

Surface-mount Termination

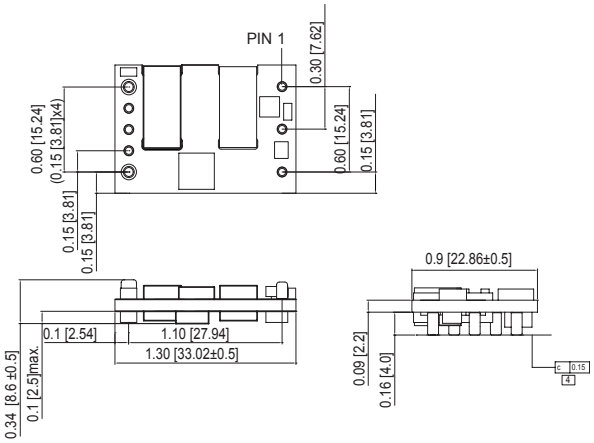

PIN ASSIGNMENTS

Single Output	
Pin 1	+Vin
Pin 2	Enable
Pin 3	-Vin
Pin 4	-Vout
Pin 5	-Sense
Pin 6	Trim
Pin 7	+Sense
Pin 8	+Vout

MECHANICAL DRAWINGS

Recommended PAD/Hole Pattern

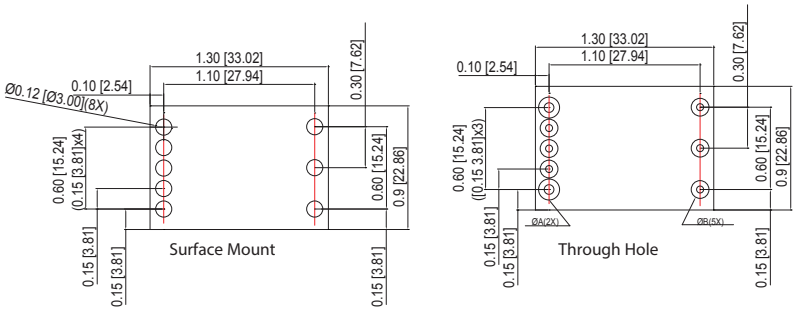

TABLE1

	HOLE & PAD DIAMETER FOR CUSTOMER (RECOMMENDED)	
	HOLE DIAMETER (Ød)	PAD DIAMETER (ØD)
ØA	Ø1.9	Ø2.9
ØB	Ø1.3	Ø2.3

Recommended Pick-up Point

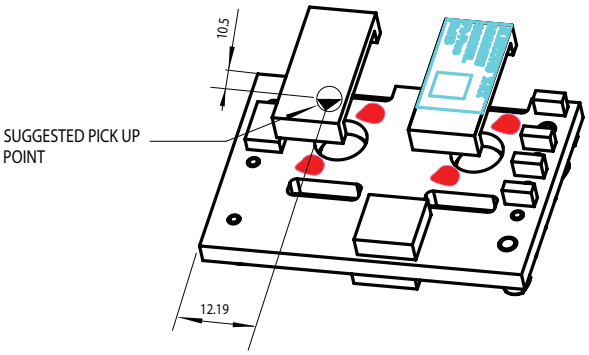

Notes:
1. 20 MHz bandwidth. External 10 µF tant.capacitor in parallel with 0.1uF ceramic capacitor placed across + Vout and -Vout; 33 µF e-cap or equivalent placed across +Vin and -Vin.
2. Efficiency measurements taken at full load, nominal line and TA = 25 °C
3. All specifications are typical at nominal line, full load and TA = 25 °C unless otherwise noted.
4. Mechanical drawings are for reference only. Dimensions are in inches [mm]. Mechanical tolerance ± 0.020 [± 0.50]
5. Technical Reference Notes should be consulted for detailed information when available.
6. All specifications subject to change without notice.
7. Warranty two (2) years.
8. The through-hole terminated modules are intended for wave soldering process.

ABOUT ADVANCED ENERGY

Advanced Energy (AE) has devoted more than three decades to perfecting power for its global customers. AE designs and manufactures highly engineered, precision power conversion, measurement and control solutions for mission-critical applications and processes.

Our products enable customer innovation in complex applications for a wide range of industries including semiconductor equipment, industrial, manufacturing, telecommunications, data center computing, and medical. With deep applications know-how and responsive service and support across the globe, we build collaborative partnerships to meet rapid technological developments, propel growth for our customers, and innovate the future of power.

PRECISION | POWER | PERFORMANCE

For international contact information,
visit advancedenergy.com.

powersales@aei.com (Sales Support)
productsupport.ep@aei.com (Technical Support)
+1 888 412 7832

Specifications are subject to change without notice. Not responsible for errors or omissions. ©2020 Advanced Energy Industries, Inc. All rights reserved. Advanced Energy®, AE® and Artesyn™ are U.S. trademarks of Advanced Energy Industries, Inc.

ENG-ALD15-235-01 10.30