ARTESYN ATA SERIES

3 Watts

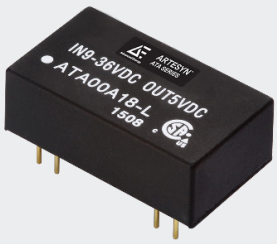

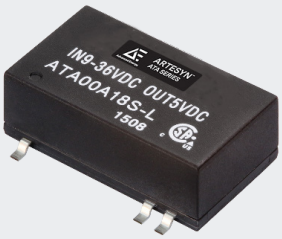

Advanced Energy's Artesyn ATA series 3 watt isolated DC-DC converters are suitable for a diverse range of low power applications, including data communication, telecommunication and computer peripheral equipment, industrial automation and mobile battery-powered systems. The series comprises 16 variants, each of which is available in a mini dual-in-line package for through-hole mounting or a mini surface-mount package.

DATA SHEET

Total Power

3 W

Input Voltage

12, 24 or 48 V

# of Outputs

Single and Dual

RoHS

SPECIAL FEATURES

- Ultra compact DIP and SMD package 23.8 x 13.7 x 8.0 mm (0.94 x 0.54 x 0.31 inches)
- Efficiency up to 80%
- I/O-isolation 1500 VDC
- Ultra-wide 4:1 input range
- Operating temperature range -40°C to +85°C
- Remote ON/OFF control
- Input filter meets EN 55022,class A and FCC, level A
- 3 year product warranty
- CSA/UL/IEC/EN 60950-1 Safety Approval
- Qualified for lead-free reflow solder process according to IPC/JEDEC J-STD-020D (for SMD Package)

SAFETY

- UL/cUL/IEC/EN 62368-1 (60950-1) Safety Approval & CE Marking

©2024 Advanced Energy Industries, Inc.

ELECTRICAL SPECIFICATIONS

Input	
Input range	9 to 36 VDC, 18 to 75 VDC
Efficiency	80% @ 24 Vo
Output	
Voltage tolerance	±2.0%
Line regulation	1.0%
Load regulation	1.2%
Noise/ripple	100 mV
Overload protection	150% typ of Io max, foldback
Short circuit protection	Hiccup mode
Switching frequency	350 KHz
Isolation	
I/O isolation	I/O: 1500 VDC
Insulation resistance	1000 Mohm
Insulation capacitance	500 pF

ENVIRONMENTAL SPECIFICATIONS

Operating ambient temperature range	-40°C to +85°C
Storage temperature	-50°C to +125°C
Humidity	5% to 95% non-condensing
MTBF	300 Khrs calculated

ORDERING INFORMATION

Part Number	Input Voltage	Output Voltage	Output Current	Efficiency	Power
ATA00F18-L	9-36 VDC	3.3 V	600 mA	75%	2 W
ATA00A18-L	9-36 VDC	5 V	600 mA	78%	3 W
ATA00B18-L	9-36 VDC	12 V	250 mA	80%	3 W
ATA00B18S-LTR	9-36 VDC	12 V	250 mA	80%	3 W
ATA00C18-L	9-36 VDC	15 V	200 mA	80%	3 W
ATA00H18-L	9-36 VDC	24 V	125 mA	80%	3 W
ATA00AA18-L	9-36 VDC	+/-5 V	300 mA	77%	3 W
ATA00BB18-L	9-36 VDC	+/-12 V	125 mA	80%	3 W
ATA00CC18-L	9-36 VDC	+/-15 V	100 mA	80%	3 W
ATA00F36-L	18-75 VDC	3.3 V	600 mA	75%	2 W
ATA00A36-L	18-75 VDC	5 V	600 mA	78%	3 W
ATA00B36-L	18-75 VDC	12 V	250 mA	80%	3 W
ATA00C36-L	18-75 VDC	15 V	200 mA	80%	3 W
ATA00H36-L	18-75 VDC	24 V	125 mA	80%	3 W
ATA00AA36-L	18-75 VDC	+/-5 V	300 mA	77%	3 W
ATA00BB36-L	18-75 VDC	+/-12 V	125 mA	80%	3 W
ATA00CC36-L	18-75 VDC	+/-15 V	100 mA	80%	3 W
ATA00F18S-L	9-36 VDC	3.3 V	600 mA	75%	2 W
ATA00A18S-L	9-36 VDC	5 V	600 mA	78%	3 W
ATA00B18S-L	9-36 VDC	12 V	250 mA	80%	3 W
ATA00C18S-L	9-36 VDC	15 V	200 mA	80%	3 W
ATA00H18S-L	9-36 VDC	24 V	125 mA	80%	3 W
ATA00AA18S-L	9-36 VDC	+/-5 V	300 mA	77%	3 W
ATA00BB18S-L	9-36 VDC	+/-12 V	125 mA	80%	3 W
ATA00CC18S-L	9-36 VDC	+/-15 V	100 mA	80%	3 W
ATA00F36S-L	18-75 VDC	3.3 V	600 mA	75%	2 W
ATA00A36S-L	18-75 VDC	5 V	600 mA	78%	3 W
ATA00B36S-L	18-75 VDC	12 V	250 mA	80%	3 W
ATA00C36S-L	18-75 VDC	15 V	200 mA	80%	3 W
ATA00H36S-L	18-75 VDC	24 V	125 mA	80%	3 W
ATA00AA36S-L	18-75 VDC	+/-5 V	300 mA	77%	3 W
ATA00BB36S-L	18-75 VDC	+/-12 V	125 mA	80%	3 W
ATA00CC36S-L	18-75 VDC	+/-15 V	100 mA	80%	3 W

MECHANICAL DIMENSIONS

ATAxxx-L (DIP)

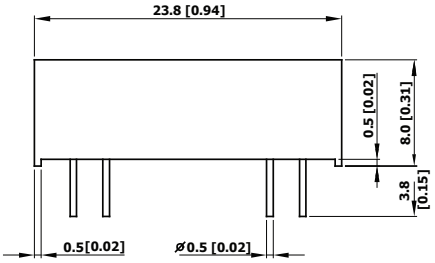

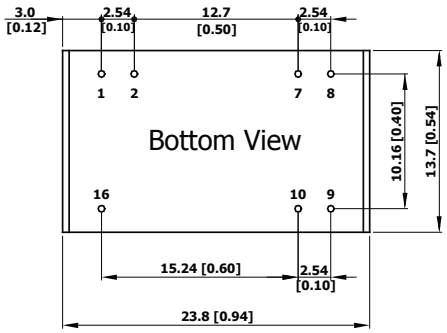

ATAxxxS-L (SMD)

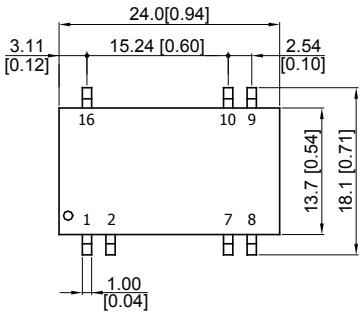

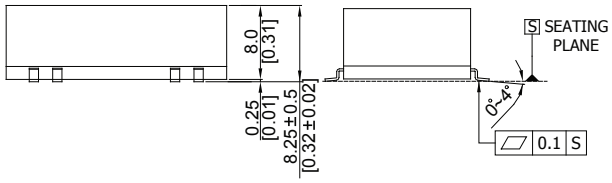

- All dimensions in mm (inches)
- Tolerance: X.X±0.5 (X.XX±0.01)
  X.XX±0.25 (X.XXX±0.005)
- Pin dimension tolerance: 0.5±0.05 (0.02±0.002)

PIN CONNECTORS

Pin	Single Output	Dual Output
1	-Vin	-Vin
2	Remote On/Off	Remote On/Off
7	NC	NC
8	NC	Common
9	+Vout	+Vout
10	-Vout	-Vout
16	+Vin	+Vin

ABOUT ADVANCED ENERGY

Advanced Energy (AE) has devoted more than three decades to perfecting power for its global customers. AE designs and manufactures highly engineered, precision power conversion, measurement and control solutions for mission-critical applications and processes.

Our products enable customer innovation in complex applications for a wide range of industries including semiconductor equipment, industrial, manufacturing, telecommunications, data center computing, and medical. With deep applications know-how and responsive service and support across the globe, we build collaborative partnerships to meet rapid technological developments, propel growth for our customers, and innovate the future of power.

PRECISION | POWER | PERFORMANCE

For international contact information,
visit advancedenergy.com.

powersales@aei.com (Sales Support)
productsupport.ep@aei.com (Technical Support)
+1 888 412 7832

Specifications are subject to change without notice. Not responsible for errors or omissions. ©2024 Advanced Energy Industries, Inc. All rights reserved. Advanced Energy®, AE® and Artesyn™ are U.S. trademarks of Advanced Energy Industries, Inc.

ENG-ATA3W-235-01 11.29.24