AVO120-48S12

120 Watts

Eighth-brick Converter

Total Power: 120 Watts
Input Voltage: 36 to 75 Vdc
# of Outputs: Single

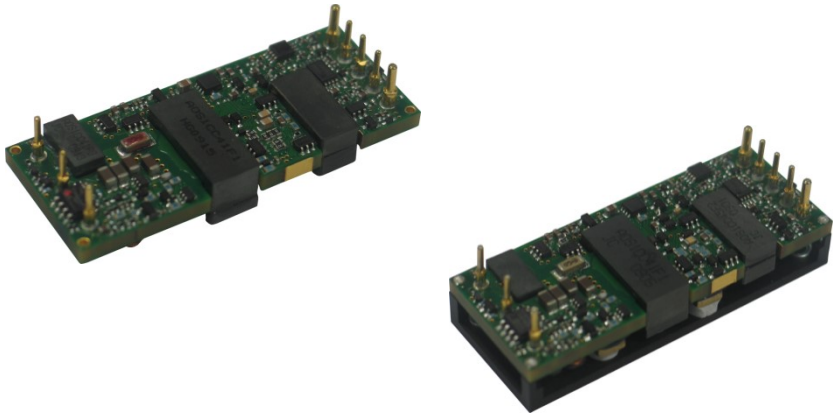

Special Features

- Delivers up to 10A output current
- Industry standard Eighth-brick
- Basic isolation
- Ultra high efficiency 93% typ. at 100% load
- wide input voltage of 36-75V
- CNT function
- Remote sense
- Trim function: +10%/-20%
- Input under-voltage lockout
- Output over-current protection (hiccup)
- Output over-voltage protection (hiccup)
- Over-temperature protection
- RoHS compliant
- Standard module with base plate
- Pin length option: 4.8mm
- Excellent thermal performance
- No minimum load requirement
- pre-bias function

Safety

IEC/EN/UL/CSA 60950 2nd
2006/95/EEC CE Mark
GB4943
UL/TUV
UL94,V-0
FCC/EN55022 Class A

Product Descriptions

The AVO120-48S12 is a single output DC/DC converter with standard eighth-brick form factor and pin configuration. It delivers up to 10A output current with 12V output. Ultra-high 93% efficiency and excellent thermal performance makes it an ideal choice for use in datacom and telecommunication applications and can operate over an ambient temperature range of -40 ^{O}C ~ +85 ^{O}C.

Applications

Telecom/ Datacom

ARTESYN™
EMBEDDED TECHNOLOGIES

Model Numbers

Standard	Output Voltage	Structure	Remote ON/OFF logic	ROHS
AVO120-48S12-4L	12Vdc	Open-frame	Negative	R6
AVO120-48S12P-4L	12Vdc	Open-frame	Positive	R6
AVO120-48S12B-4L	12Vdc	Base plate	Negative	R6
AVO120-48S12PB-4L	12Vdc	Base plate	Positive	R6
AVO200-48S12-6L	12Vdc	Open-frame	Negative	R6
AVO120-48S12P-6L	12Vdc	Open-frame	Positive	R6
AVO200-48S12B-6L	12Vdc	Base plate	Negative	R6
AVO120-48S12PB-6L	12Vdc	Base plate	Positive	R6

Ordering information

AVO120	-	48	S	12	P	B	-	4	L
①		②	③	④	⑤	⑥		⑦	⑧

①	Model series	AVO120: series name
②	Input voltage	48: input rated voltage 48V
③	Output number	S: single output
④	Rated output voltage	12: 12V output
⑤	Remote ON/OFF logic	Default: negative logic; P: positive logic
⑥	Baseplate	Default: without the baseplate, B:with baseplate
⑦	Pin length	4: 4.8mm; 6: 3.8mm
⑧	RoHS status	L: RoHS, R6; Y: RoHS, R5

Options

None

Electrical Specifications

Absolute Maximum Ratings

Stress in excess of those listed in the “Absolute Maximum Ratings” may cause permanent damage to the power supply. These are stress ratings only and functional operation of the unit is not implied at these or any other conditions above those given in the operational sections of this TRN. Exposure to any absolute maximum rated condition for extended periods may adversely affect the power supply’s reliability.

Table 1. Absolute Maximum Ratings:

Parameter	Model	Symbol	Min	Typ	Max	Unit
Input Voltage						
Operating -Continuous	All	$V_{IN,DC}$	0	-	80	Vdc
Non-operating -100mS	All		0	-	100	Vdc
Maximum Output Power	All	$P_{O,max}$	-	-	60	W
Ambient Operating Temperature	All	T_A	-40	-	+85	^{O}C
Storage Temperature	All	T_{STG}	-55	-	+125	^{O}C
Voltage at remote ON/OFF pin	All		-0.7	-	12	V
Humidity (non-condensing)						
Operating	All		-	-	95	%
Non-operating	All		-	-	95	%
Isolation Voltage[1]						
Input to outputs	Open-frame modules		-	-	2000	Vdc
Input to baseplate	Baseplate modules		-	-	1000	Vdc
Outputs to baseplate	Baseplate modules		-	-	1000	Vdc
Isolation Resistance	All		10	-	-	Mohm

Note 1 - 1mA for 1min, slew rate of 2000V/10s

Input Specifications

Table 2. Input Specifications:

Parameter	Conditions[1]	Symbol	Min	Typ	Max	Unit
Operating Input Voltage, DC	All	$V_{IN,DC}$	36	48	75	Vdc
Turn-on Voltage Threshold	$I_O = I_{O,max}$	$V_{IN,ON}$	31	34	36	Vdc
Turn-off Voltage Threshold	$I_O = I_{O,max}$	$V_{IN,OFF}$	30	33	35	Vdc
Lockout voltage hysteresis	All	-	1	-	3	V
Maximum Input Current ($I_O = I_{O,max}$)	$V_{IN,DC} = 36V_{DC}$, $I_O = I_{O,max}$	$I_{IN,max}$	-	-	4.5	A
Inrush current transient rating			-	-	1	A^2s
Recommended Input Fuse	Fast blow external fuse recommended		-	-	10	A
Recommended External Input Capacitance	Low ESR capacitor recommended	C_{IN}	100	-	-	uF
Input Reflected Ripple Current	5Hz to 20MHz, 12uH source impedance, TA = 25 ºC		-	20	-	mA
Operating Efficiency	T_A=25 ^{O}C $I_O = I_{O,max}$ $I_O = 50\%I_{O,max}$ $I_O = 20\%I_{O,max}$	η	- - -	93 93 89.5	- - -	% % %

Note 1 - Ta = 25 ^{O}C, airflow rate = 400 LFM, Vin = 48Vdc, nominal Vout unless otherwise noted.

Output Specifications

Table 3. Output Specifications:

Parameter		Conditions[1]	Symbol	Min	Typ	Max	Unit
Factory Set Voltage		VI = 48Vdc: Io = Io,max; Ta = 25 ºC	V_O	11.8	12	12.2	Vdc
Output Voltage Line Regulation		$V_{IN,DC}$ = $V_{IN,DC.min}$ to $V_{IN,DC.max}$	V_O	-	6		mV
Output Voltage Load Regulation		I_O=$I_{O,min}$ to $I_{O,max}$	V_O	-	10		mV
Output Voltage Temperature Regulation		Tc = -40 ºC to +100ºC	$\%V_O$	-	-	0.02	%/ºC
Output Voltage Trim Range		All	V_O	9.6	-	13.2	Vdc
Total output voltage range		Over sample, line, load, temperature & life		11.6	12	12.4	Vdc
Output Ripple and Noise Peak-to-Peak		Measure with a 1uF ceramic capacitor in parallel with a 10uF tantalum capacitor, 0 to 20MHz bandwidth	V_O	-	65	-	mV_{PK-PK}
Output Current		All	Io	0	-	10	A
Output DC current-limit inception[2]		All	Io	10.5		18	A
Vout pre-bias level						90	$\%V_o$
External Load Capacitance[3]		All	C_O	100		6000	µF
V_O Dynamic Response	Peak Deviation	25%~50%~25% 25% load change slew rate = 0.1A/us	$\pm V_O$	-	100	-	mV
	Settling Time		T_s	-	150	-	uSec
	Peak Deviation	25%~50%~25% 25% load change slew rate = 1A/us	$\pm V_O$		150	-	mV
	Settling Time		T_s		150	-	uSec
Turn-on transient	Rise time	I_O = I_{max}	T_{rise}	-	15		mS
	Turn-on delay time	I_O = I_{max}	$T_{turn\ on\ delay}$	-	50		mS
	Output voltage overshoot	I_O = 0	$\%V_O$	-	0		%

Note 1 - Ta = 25 ºC, airflow rate = 400 LFM, Vin = 48Vdc, nominal Vout unless otherwise noted.
Note 2 - Hiccup: auto-restart when over-current condition is removed.
Note 3 - High frequency and low ESR is recommended.

Output Specifications

Table 3. Output Specifications, con't:

Parameter		Conditions	Symbol	Min	Typ	Max	Unit
Switching frequency		All	f_{SW}	-	165	-	KHz
Remote ON/OFF control (positive logic)	Off-state voltage	All		-0.7	-	1.2	V
	On-state voltage	All		3.5	-	12	V
Remote ON/OFF control (negative logic)	Off-state voltage	All		3.5	-	12	V
	On-state voltage	All		-0.7	-	1.2	V
Output over-voltage protection[4]		All		13.8		19	V
Output over-temperature protection[5] With baseplate Without baseplate		 All All	 T T	 - 110	 99 -	 - 135	 ^{O}C ^{O}C
Over-temperature hysteresis Without baseplate		All	T	5	-	-	^{O}C
Output voltage remote sense range		All	Vo	-	-	1	V
MTBF		$V_{IN,DC}$ = 48Vdc, 100% load, 25 ^{O}C T_A		-	1.5	-	10^6 h

Note 4 - Hiccup: auto-restart when over-voltage condition is removed.
Note 5 - Auto recovery.

AVO120-48S12 Performance Curves

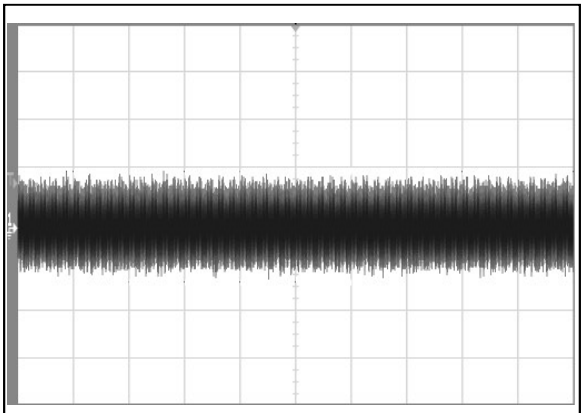

Figure 1: AVO120-48S12 Input reflected ripple current

Ch 1: Vo (100ms/div, 10mA/div)

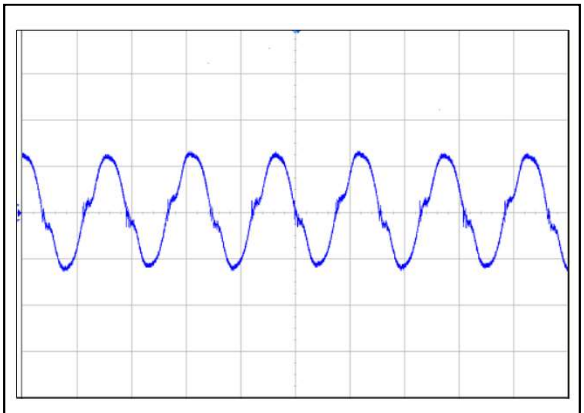

Figure 2: AVO120-48S12 Ripple and Noise Measurement

Ch 1: Vo (200mV/div, 2µs/div)

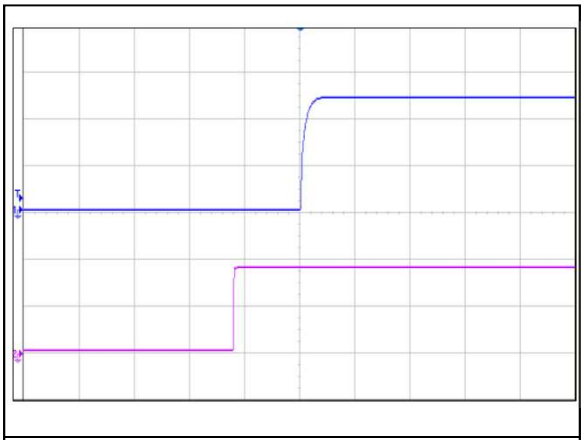

Figure 3: AVO120-48S12 Output Startup by Power On(50ms/div)

Ch 1: Vin (20V/div) Ch 2: Vout (5V/div)

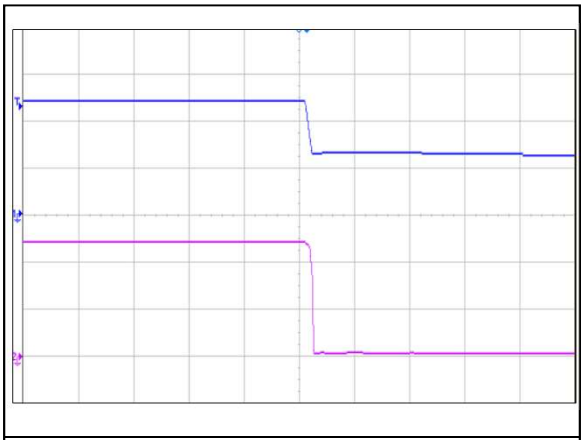

Figure 4: AVO120-48S12 Output Shutdown by Power Off (10ms/div)

Ch 1: CNT (20V/div) Ch 2: Vout(5V/div)

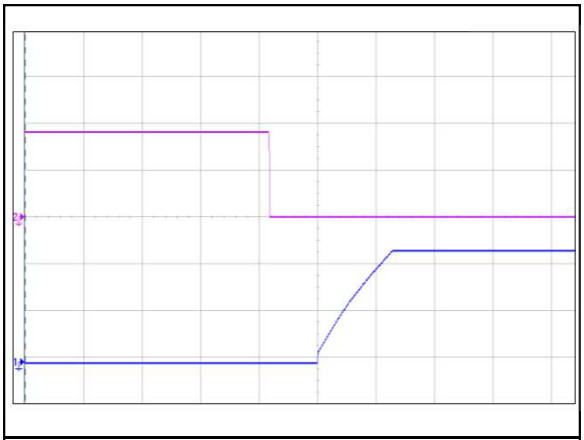

Figure 5: AVO120-48S12 Output Startup by Remote On (100ms/div)

Ch 1: Vout (5V/div) Ch 2: Remote on/off (2V/div)

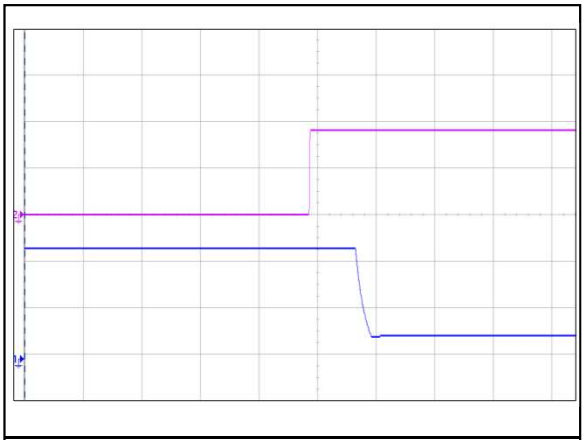

Figure 6: AVO120-48S12 Output Shutdown by Remote Off (100ms/div)

Ch 1: Vout (5V/div) Ch 2: Remote on/off (2V/div)

AVO120-48S12 Performance Curves

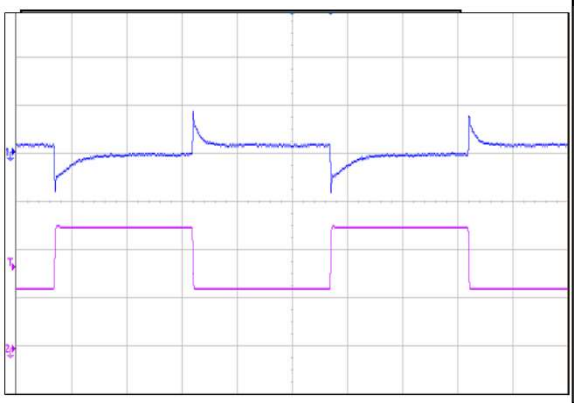

Figure 7: AVO120-48S12 Transient Response (2mS/div)
50%~25%~50% load change, 0.1A/uS slew rate, Vin = 48Vdc
Ch 1: Vo (100mV/div) Ch 2: Io (2A/div)

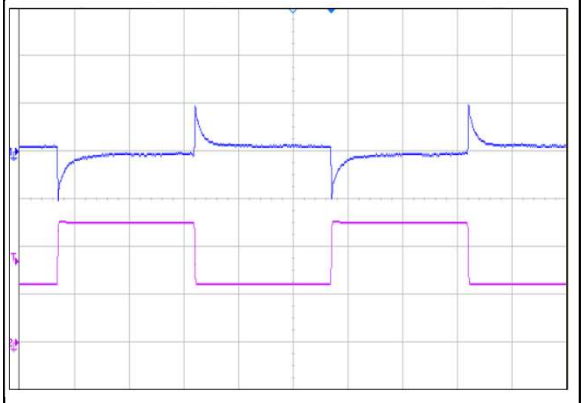

Figure 8: AVO120-48S12 Transient Response (2mS/div)
50%~25%~50% load change, 1A/uS slew rate, Vin = 48Vdc
Ch 1: Vo (100mV/div) Ch 2: Io (2A/div)

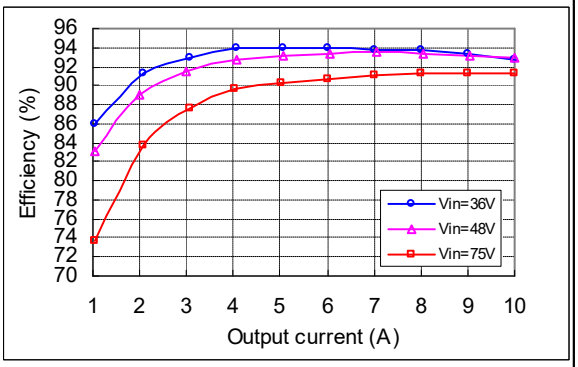

Figure 9: AVO120-48S12 Typical Efficiency

Vin = 36-75Vdc, Ta=25°C, Vo=12V, Air velocity=300LFM

Mechanical Specifications

Mechanical Outlines – Open-Frame Module (Top & Side View)

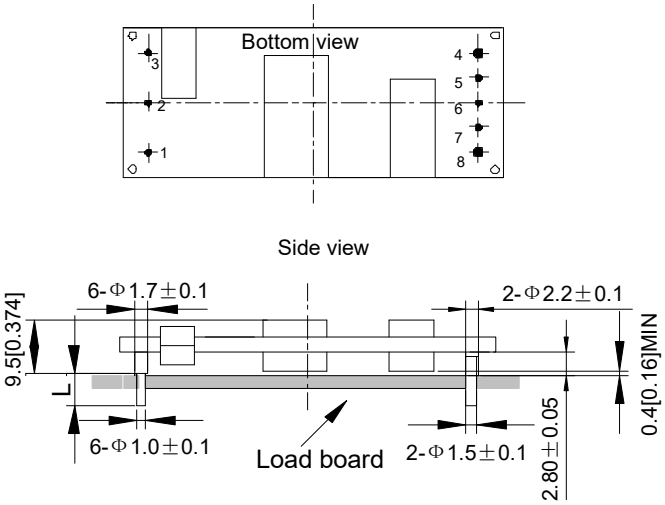

Unit: mm[inch] Bottom view: pin on upside

Tolerance: X.Xmm±0.5mm[X.X in.±0.02in.]

X.XXmm±0.25mm[X.XX in.±0.01in.]

Figure 10 Open-frame product

Mechanical Outlines – Base plate Module(Top & Side View)

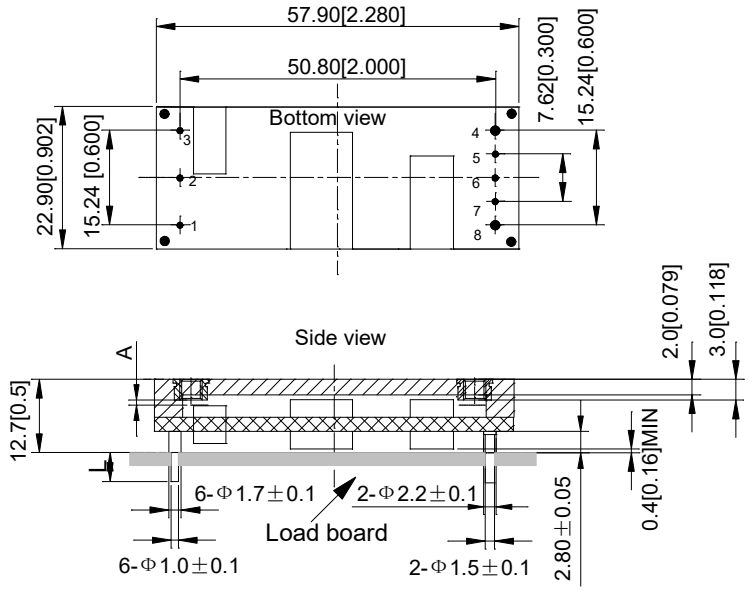

Unit: mm[inch] Bottom view: pin on upside

Tolerance: X.Xmm±0.5mm[X.X in.±0.02in.]

X.XXmm±0.25mm[X.XX in.±0.01in.]

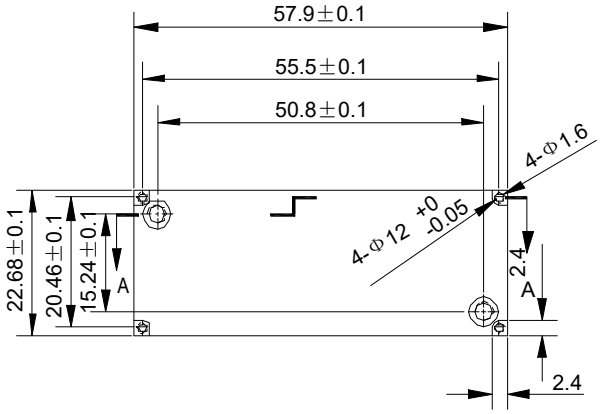

Figure 11 Baseplate product

Pin length option

Device code suffix	L
-4	4.8mm±0.2mm
-6	3.8mm±0.2mm
-8	2.8mm±0.2mm
None	5.8mm±0.2mm

Pin Designations

Pin No	Name	Function
1	Vin+	Positive input voltage
2	Remote ON/OFF	Remote control
3	Vin-	Negative input voltage
4	Vo-	Positive output voltage
5	S-	Negative remote sense
6	Trim	Output voltage trim
7	S+	Positive remote sense
8	Vo+	Positive output voltage

Environmental Specifications

Electromagnetic compatibility Characteristics

Table 4. Environmental Specifications:

Document	Description	Criteria
EN55022, Class A Limits	Conducted and Radiated EMI Limits	/
IEC/EN 61000-4-2, Level 3	Electromagnetic Compatibility (EMC) - Testing and measurement techniques - Electrostatic discharge immunity test. Enclosure Port	B
IEC/EN 61000-4-6, Level 2	Electromagnetic Compatibility (EMC) - Testing and measurement techniques, Continuous Conducted Interference. DC input port	B
IEC/EN 61000-4-4, Level3	Electromagnetic Compatibility (EMC) - Testing and measurement techniques, Electrical Fast Transient. DC input port.	B
IEC/EN 61000-4-5	Electromagnetic Compatibility (EMC) - Testing and measurement techniques, Immunity to surges - 600V common mode and 600V differential mode for DC ports	A
EN61000-4-29	Electromagnetic Compatibility (EMC) - Testing and measurement techniques, Voltage Dips and short interruptions and voltage variations. DC input port	B

Criterion A: Normal performance during and after test.
Criterion B: For EFT and surges, low-voltage protection or reset is not allowed. Temporary output voltage fluctuation ceases after disturbances ceases, and from which the EUT recovers its normal performance automatically. For Dips and ESD, output voltage fluctuation or reset is allowed during the test, but recovers to its normal performance automatically after the disturbance ceases.
Criterion C: Temporary loss of output, the correction of which requires operator intervention.
Criterion D: Loss of output which is not recoverable, owing to damage to hardware.

EMC test conditions

See Figure16.

Qualification Testing

Parameter	Unit (pcs)	Test condition
Halt test	4-5	$T_{a,min}$-30 ^{O}C to $T_{a,max}$+25 ^{O}C, 10 ^{O}C step, V_{in} = min to max, 0 ~ 100% load
Vibration	3	Frequency range: 5Hz ~ 20Hz, 20Hz ~ 200Hz, A.S.D: 1.0m^2/s^3, -3db/oct, axes of vibration: X/Y/Z. Time: 30min/axes
Mechanical Shock	3	30g, 6ms, 3axes, 6directions, 3time/direction
Thermal Shock	3	-55 ^{O}C to 125 ^{O}C, unit temperature 20cycles
Thermal Cycling	3	-40 ^{O}C to 85 ^{O}C, temperature change rate: 1^{O}C/min, cycles: 2cycles
Humidity	3	40 ^{O}C, 95%RH, 48h
Solder Ability	15	IPC J-STD-002C-2007

Thermal Considerations - Open-Frame

The converter is designed to operate in different thermal environments and sufficient cooling must be provided. Proper cooling can be verified by measuring the temperature at the test points. The temperature at these points should not exceed the max values in below table.

For a typical application, forced airflow direction is from Vin- to Vin+. Figure 13 shows the derating of output current vs. ambient air temperature at different air velocity.

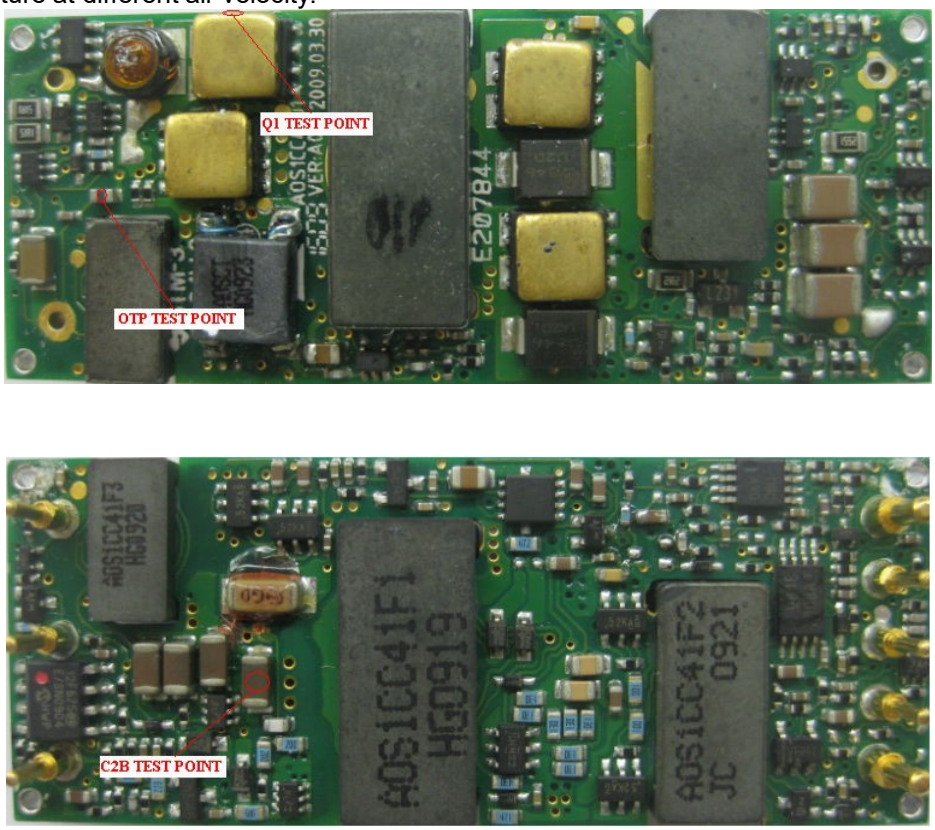

Figure 12 Thermal test points(TOP)

Test Point	Temperature limit
Q1 Test Point	128 ^{O}C
C2B Test Point	116 ^{O}C
OTP Test Point	112 ^{O}C

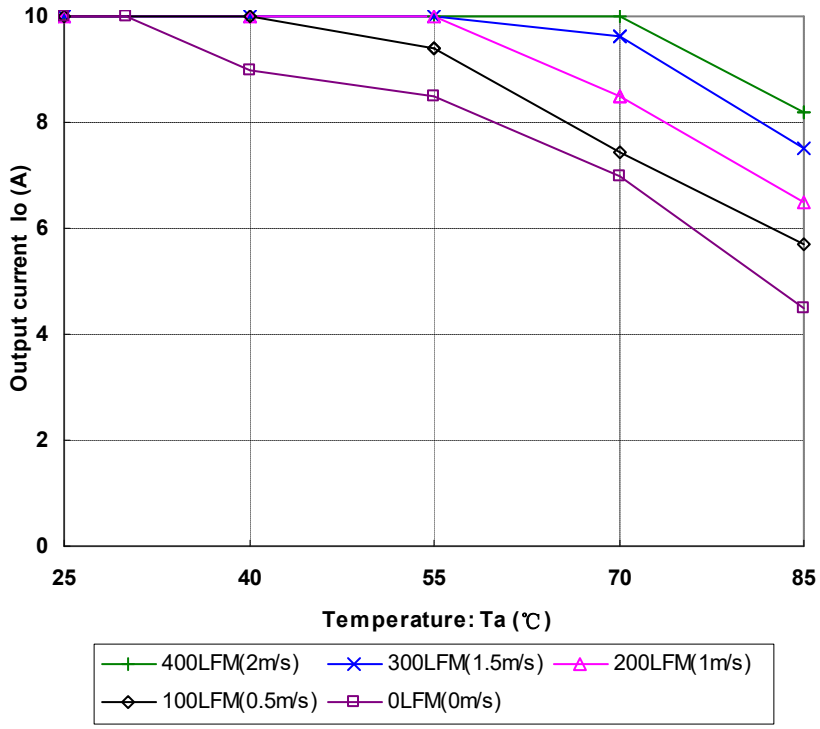

Figure 13 Output power derating, 48Vin, air flowing across the converter from Vin- and Vin+

Thermal Considerations - Base plate

The converter is designed to operate in different thermal environments and sufficient cooling must be provided. Proper cooling can be verified by measuring the temperature at the test points. The temperature at this point should not exceed the max values in below table.

For a typical application, forced airflow direction is from Vin- to Vin+. Figure 15 shows the derating of output current vs. ambient air temperature at different air velocity.

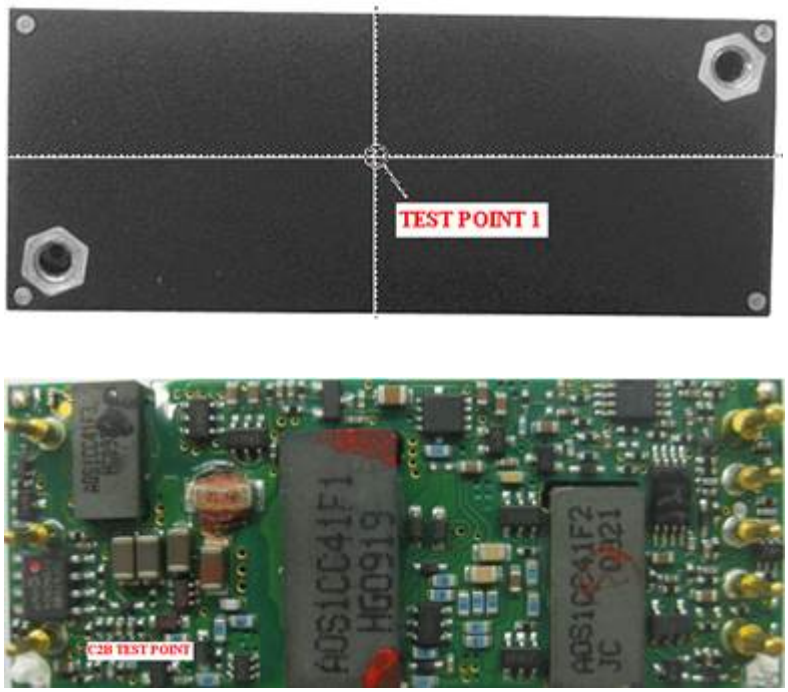

Figure 14 Thermal test points(TOP)

Test Point	Temperature limit
Test Point 1	99 ^{O}C
C2B Test Point	116 ^{O}C

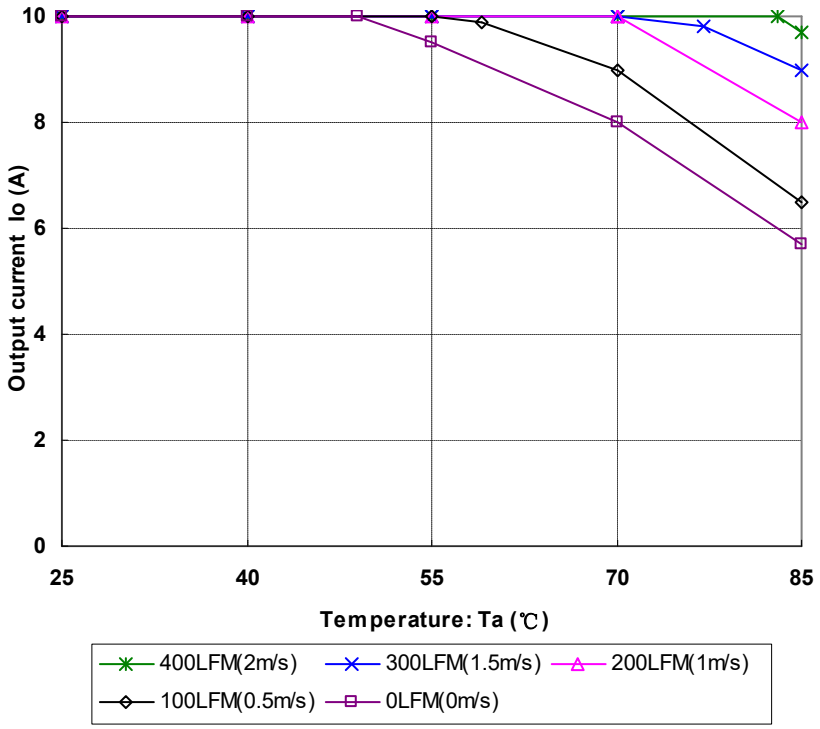

Figure 15 Output power derating, 48Vin, air flowing across the converter from V_{in}- and V_{in}+

Application Notes

Typical Application

Below is the typical application of the AVO120-48S12 series power supply.

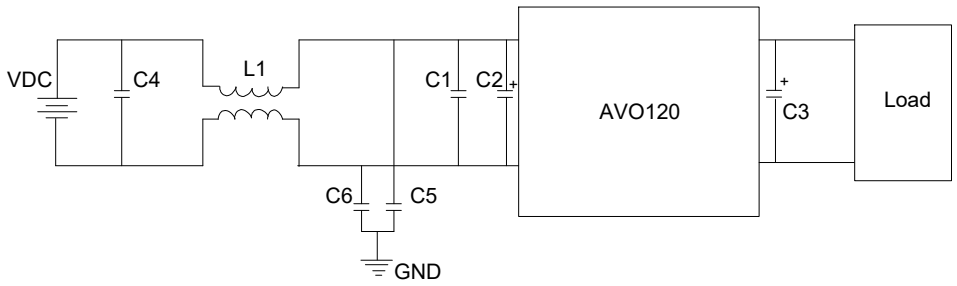

Figure 16 Typical application

C4: SMD ceramic-100V-1000nF-X7R-1210

C1: SMDceramic-100V-100nF-±10%-X7R-1206

C2: 100μF/100V electrolytic capacitor, High frequency and low ESR

C3: 470μF/100V electrolytic capacitor, High frequency and low ESR

C5 C6: SMD ceramic- 22nF/1000V/X7R-1210

L1: 1320uH-±25%-4A-R5K-21*21*12.5mm

.

Remote ON/OFF

Either positive or negative remote ON/OFF logic is available in AVO120-48S12-4. The logic is CMOS and TTL compatible.

Below is the detailed internal circuit and reference in AVO120-48S12-4.

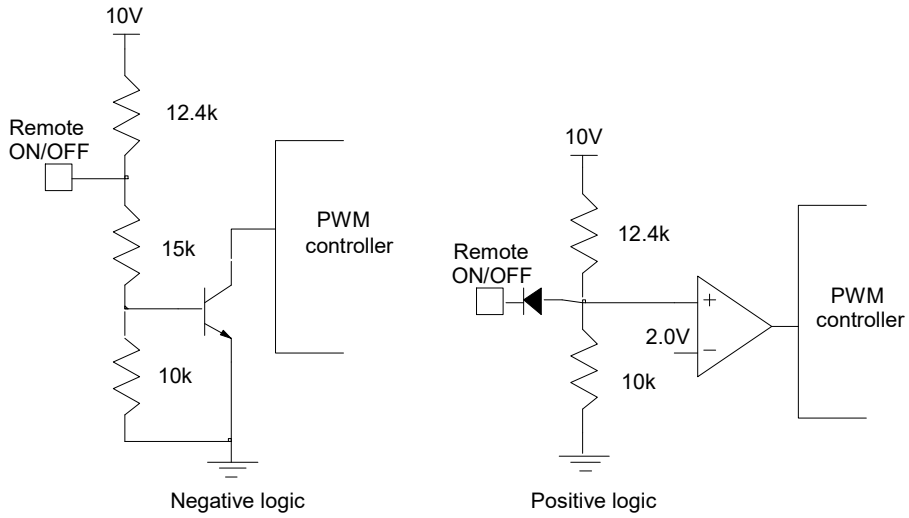

Figure 17 external Remote ON/OFF circuit

Trim Characteristics

Connecting an external resistor between Trim pin and Vo- pin will decrease the output voltage. While connecting it between Trim and Vo+ will increase the output voltage. The following equations determine the external resistance to obtain the trimmed output voltage.

$$R_{adj_down} = (\frac{511}{\Delta\%} - 10.22)k\Omega$$

$$R_{adj_up} = (\frac{5.11 V_{out}(100+\Delta\%)}{V_{ref}\ \Delta\%} - \frac{511}{\Delta\%} - 10.22)k\Omega$$

R_{adj_down} :Value of external adjustment resistor which shall be connected between Trim and –Sense for trimming down.

$\Delta\%$ Output voltage change rate against nominal output voltage.

R_{adj_up} :Value of external adjustment resistor which shall be connected between Trim and +Sense for trimming up.

Vout: Nominal output voltage.

Vref = 1.225 V

When trimming up, the output current should be decreased accordingly so as not to exceed the maximum output power and the minimum input voltage should be increased as shown in below figure.

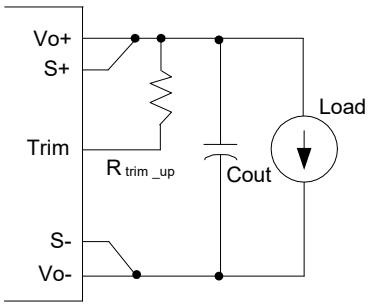

Figure 18 Trim up

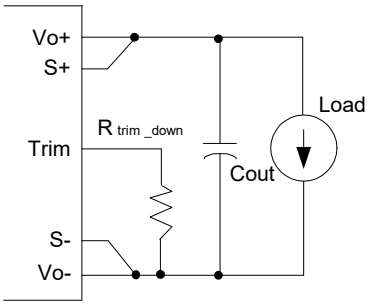

Figure 19 Trim down

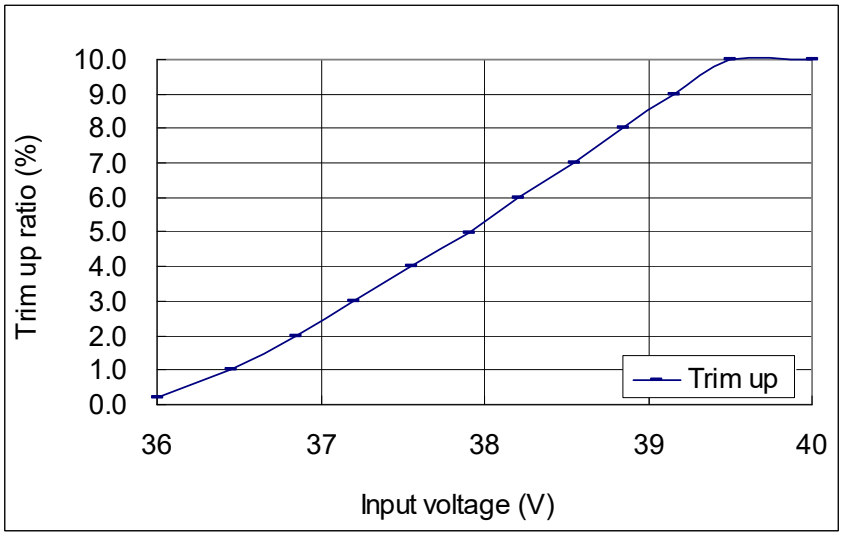

Figure 20 Trim up curve at full power

Input Ripple & Inrush Current and Output Ripple & Noise Test Configuration

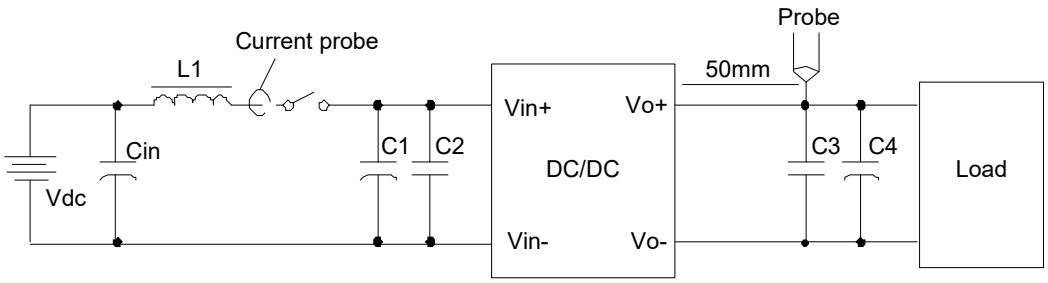

Figure 21 Input ripple & inrush current output ripple & noise test configuration

Vdc: DC power supply

L1: 12μH

Cin: 220μF/100V typical

C1 ~ C4: See Figure 16

Note: Using a coaxial cable with series 50Ω resistor and 0.68μF ceramic capacitor or a ground ring of probe to test output ripple & noise is recommended.

Sense Characteristics

If the load is far from the unit, connect S+ and S- to the terminal of the load respectively to compensate the voltage drop on the transmission line.

If the sense compensate function is not necessary, connect S+ to Vo+ and S- to Vo- directly.

Weight

The AVO120-48S12(Open-frame) weight is 26g with +/-10% tolerance.

Soldering

The product is intended for standard manual，reflow or wave soldering.

When reflow soldering is used, the temperature on pins is specified to maximum 260 ^{O}C for maximum 10s. When wave soldering is used, the temperature on pins is specified to maximum 260 ^{O}C for maximum 7s. When soldering by hand, the iron temperature should be maintained at 300 ^{O}C ~ 380 ^{O}C and applied to the converter pins for less than 10s. Longer exposure can cause internal damage to the converter.

The maximum exposure temperature for the body of the unit is 245 ^{O}C , and the termination (solder) temperature for lead-free solders should be 270 ^{O}C .

Cleaning of solder joint can be performed with cleaning solvent IPA or similative.

Assembly

The maximum length of the screw driven into the heat-sink is 3.3mm.

.

Hazardous Substances Announcement (RoHS of China)

Parts	Hazardous Substances					
	Pb	Hg	Cd	Cr^{6+}	PBB	PBDE
AVO120-48S12 series	x	x	x	x	x	x

x: Means the content of the hazardous substances in all the average quality materials of the part is within the limits specified in SJ/T-11363-2006

√: Means the content of the hazardous substances in at least one of the average quality materials of the part is outside the limits specified in SJ/T11363-2006

Artesyn Embedded Technologies has been committed to the design and manufacturing of environment-friendly products. It will reduce and eventually eliminate the hazardous substances in the products through unremitting efforts in research. However, limited by the current technical level, the following parts still contain hazardous substances due to the lack of reliable substitute or mature solution:

1. Solders (including high-temperature solder in parts) contain plumbum.
2. Glass of electric parts contains plumbum.
3. Copper alloy of pins contains plumbum

Record of Revision and Changes

Issue	Date	Description	Originators
1.0	08.25.2014	First Issue	B. Wang
1.6	09.23.2015	Change Remote sense form 0.12 to 1V	B. Wang
1.7	09.30.2015	Add the “isolation resistor”	K. Wang
1.8	01.16.2018	Update the thermal point	K. Wang

WORLDWIDE OFFICES

Americas
2900 S.Diablo Way
Tempe, AZ 85282
USA
+1 888 412 7832

Europe (UK)
Waterfront Business Park
Merry Hill, Dudley
West Midlands, DY5 1LX
United Kingdom
+44 (0) 1384 842 211

Asia (HK)
14/F, Lu Plaza
2 Wing Yip Street
Kwun Tong, Kowloon
Hong Kong
+852 2176 3333

ARTESYN™
EMBEDDED TECHNOLOGIES

www.artesyn.com

For more information: **www.artesyn.com/power**
For support: **productsupport.ep@artesyn.com**

While every precaution has been taken to ensure accuracy and completeness in this literature, Artesyn Embedded Technologies assumes no responsibility, and disclaims all liability for damages resulting from use of this information or for any errors or omissions. Artesyn Embedded Technologies, Artesyn and the Artesyn Embedded Technologies logo are trademarks and service marks of Artesyn Technologies, Inc. All other names and logos referred to are trade names, trademarks, or registered trademarks of their respective owners.
© 2014 All rights reserved.