ARTESYN BCQ1300 & BDQ1300 SERIES

1300 W Quarter brick



Advanced Energy's Artesyn BDQ1300 & BCQ1300 series quarter-brick are isolated DC-DC converters that produce a single 12V nominal output. Rated at 1300 watts, these converters can deliver up to 107 amps output current and has no minimum load requirement.

DATA SHEET

Total Power:

1300 W

Input Voltage:

40 - 60 Vdc

# of Outputs:

Single

SPECIAL FEATURES

- Delivers up to 1300 W
- Ultra-high efficiency above 97%
- Startup Pre-bias
- Input range: 40 V – 60 V
- PMBus™ function (BDQ1300)
- Parallel current sharing (BCQ1300)
- Excellent thermal performance
- No minimum load requirement
- Fixed switching frequency
- Base-plate for contact cooling or heatsink mounting
- ROHS 3.0 (2011/65/EU) compliant
- Input under voltage lockout
- Input over voltage lockout
- Output over current protection
- Output over voltage protection (BDQ1300)
- Over temperature protection
- Pin length option: 4.6 mm

SAFETY

- TUV/CE 62368-1
- UL/cUL 62368-1

©2021 Advanced Energy Industries, Inc.

ELECTRICAL SPECIFICATIONS

	BCQ1300	BDQ1300
Input		
Input range	40-60 Vdc	40-60 Vdc
Efficiency (50% load)	97.7%	97.5%
Output		
Factory set voltage	13.13 Vdc	12.15 Vdc
Output voltage total regulation	9.6~14.5 Vdc	8.85~12.55 Vdc
Load regulation	400 mV max	120 mV max
Noise/ripple	140 mV	200 mV
Output current	90 A	107 A
Over voltage protection	NA	Hiccup, Auto-restart
Over current protection	Hiccup, Auto-restart	Hiccup, Auto-restart
Over temperature protection	Auto-recovery	Auto-recovery
Temperature coefficient	±0.02/°C	±0.02/°C
Isolation		
I/O isolation (input to output)	1500 Vdc	800 Vdc

ENVIRONMENTAL SPECIFICATIONS

Operating ambient temperature range	-40 °C to +85 °C
Storage temperature	-55 °C to +125 °C
Humidity	5% to 95% (non-condensing)
MTBF	1.5 Million hours
RoHS Compliant	Yes

MECHANICAL DRAWING AND PIN ASSIGNMENTS (BCQ1300)

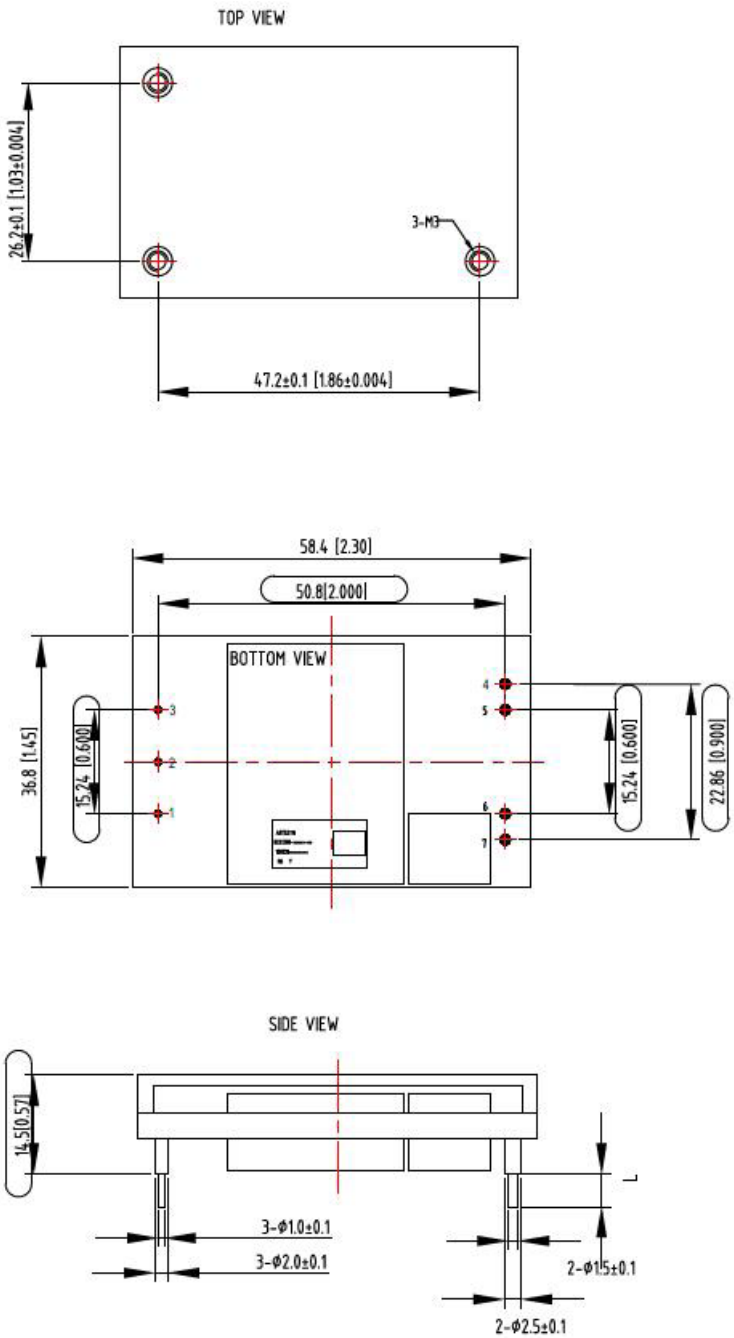

UNIT: mm (inch) L=4.60mm
TOLERANCE: X.X mm±0.5mm [X.XX in.± 0.02in.]
X.XX mm±0.25mm[X.XXX in.±0.01in.]

Pin No	Name	Function
1	Vin+	Positive input voltage
2	Remote On/Off	Remote control
3	Vin-	Negative input voltage
4&5	Vo-	Negative output voltage
6&7	Vo+	Positive output voltage

MECHANICAL DRAWING AND PIN ASSIGNMENTS (BDQ1300)

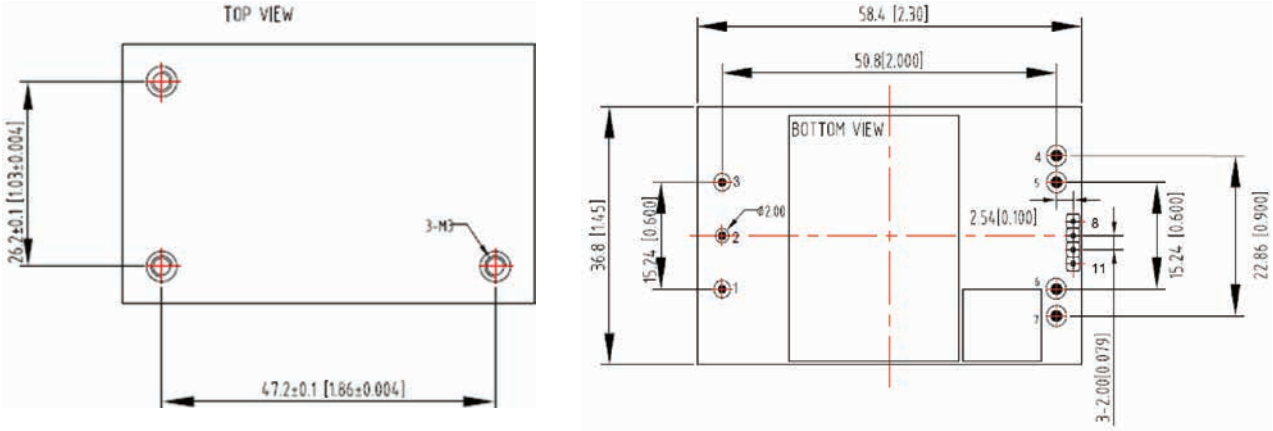

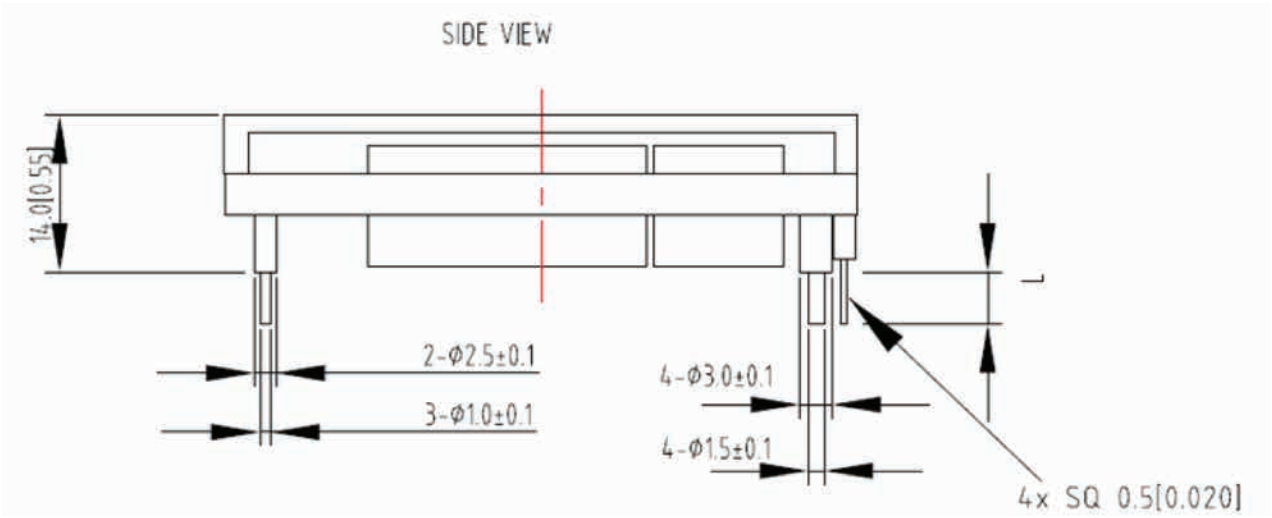

UNIT: mm (inch) L=4.60mm
TOLERANCE: X.X mm±0.5mm [X.XX in.± 0.02in.]
X.XX mm±0.25mm [X.XXX in.±0.01in.]
Notes: 1. Dimensions within the box are critical dimensions.
2. BDQ1300-48S12B-4LI with pin8~11,
BDQ1300-48S12B-4L without pin8~11
3. The minimum clearance from customer PCB is 0.25 mm [0.01in.].
4. Heatsink mounting holes (M3) permit max 3.0 mm screw penetration depth into baseplate

Pin No	Name	Function
1	Vin+	Positive input voltage
2	Remote ON/OFF	Remote control
3	Vin-	Negative input voltage
4	Vo-	Negative output voltage
5	Vo-	Negative output voltage
6	Vo+	Positive output voltage
7	Vo+	Positive output voltage
8	Data	PMBus™ Data
9	Alert	PMBus™ Alert signal
10	Clock	PMBus™ Clock
11	Addr	PMBus™ Address

Notes:
1. All specifications are subject to change without notice. Mechanical drawings are for reference only.
2. Warranty: 2 years
3. Label and logo appearance may vary from what is shown on mechanical drawings.

ORDERING INFORMATION

Standard	Output Voltage	Structure	Pin Tyoe	RoHS Status	PMBus™
BDQ1300-48S12B-4LI	12.15 Vdc	Baseplate	Through hole	ROHS3.0 (2011/65/EU)	Yes
BDQ1300-48S12B-4L	12.15 Vdc	Baseplate	Through hole	ROHS3.0 (2011/65/EU)	No
BCQ1300-48S12B-4L	9.6 Vdc~14.5 Vdc	Baseplated	Through hole	ROHS3.0 (2011/65/EU)	No

- Standard version is negative enable
- "-4" = 4.6 mm pin length
- "-L" = RoHS 6 compliance

ABOUT ADVANCED ENERGY

Advanced Energy (AE) has devoted more than three decades to perfecting power for its global customers. AE designs and manufactures highly engineered, precision power conversion, measurement and control solutions for mission-critical applications and processes.

Our products enable customer innovation in complex applications for a wide range of industries including semiconductor equipment, industrial, manufacturing, telecommunications, data center computing, and medical. With deep applications know-how and responsive service and support across the globe, we build collaborative partnerships to meet rapid technological developments, propel growth for our customers, and innovate the future of power.

PRECISION | POWER | PERFORMANCE

For international contact information,
visit advancedenergy.com.

powersales@aei.com (Sales Support)
productsupport.ep@aei.com (Technical Support)
+1 888 412 7832

Specifications are subject to change without notice. Not responsible for errors or omissions. ©2021 Advanced Energy Industries, Inc. All rights reserved. Advanced Energy®, AE® and Artesyn™ are U.S. trademarks of Advanced Energy Industries, Inc.