IPM300

Dual 48 V ATCA Input Power Module

Total Power: 300 Watts
Input Voltage: -48 Vdc
Output: 3.3 V Management Bus
5.0 V Management Bus



RoHS 2002/95/EC

Special Features

- Optimized footprint for high density ATCA applications
- Accepts inputs from -48 V and B Feeds
- Hot Swap and ORing functionality
- 3.3 Vdc and 5.0 Vdc Isolated Management Power
- Adjustable Hold Up Voltage from 50 to 95 Vdc
- I2C serial bus interface for monitoring and reporting
- Programmable alarm thresholds via I2C bus
- Hardware alarms via opto-isolators for loss of A or B Feeds
- Comprehensive protection circuitry - current, voltage and temperature, inrush current, reverse polarity
- EU directive 2002/95/EC compliant for RoHS

Safety

- **UL/cUL** 60950-1 (E186249)
- **TUV** EN60950-1 (B100551485779)

Electrical Specifications

Input	
Input Range:	-36 V to -75 Vdc
Transient:	-100 Vdc (< 1 ms)
Inrush Current (without EARLY pin):	14 A typ
Recommended EARLY_A/B resistor:	100ohm, surge rated 2010 case size
Inrush Duration:	< 2 ms
Undervoltage Lockout:	$-36 < V_{in}$
Overvoltage Lockout:	$-78 \leq V_{in} < 85$ Vdc
Efficiency:	98% @ 300 W

Output		
	5.0 V Management Bus	**3.3 V Management Bus**
Nominal Setpoint:	5.0 V	3.35 V
Total Regulation Band[1]:	4.8 - 5.2 V	3.17 - 3.43 V
Output Current:	0 - 0.15 A	0 - 3.6 A
Current Limit:	130% Io, max (typ)	130% Io, max (typ)
Short Circuit:	Shutdown/Autorecovery	
Ripple and Noise[2]:	60 mVp-p	65 mVp-p
Overvoltage:	Vo > 13.4 Vdc	Vo > 5.0 Vdc (typ)
External Output Capacitance:	TBD	1000 uF max

Isolation Characteristics	
Input to Output Isolation Voltage:	2250 Vdc
Input to Output Insulation:	Basic

Environmental Specifications

Operating temperature range:	-40 °C to +85 °C ambient
Storage temperature:	-55 °C to +125 °C
MTBF:	> 1 MHrs @ 25 °C 100% Load

EMERSON Network Power

Part Number System with Options

Ordering Information					
Model Number	Input	Output	Output Current	Typical	Note
IPM300	-36 to -75 Vdc	3.3 V 5.0 V	3.6 A 0.150 A	98% @ -48 V / 300 W	With I^2C Interface

Pin Assignments		
Pin Number/Pin Name	**Function**	**Note**
1. -48V A Feed	Power input from A' bus	Connects to ATCAZone 1 connector pin 33 via external 12 A fuse
2. -48V B Feed	Power input from B' bus	Connects to ATCAZone 1 connector pin 34 via external 12 A fuse
3. 48V Return A Feed	Power return from A' bus	Connects to ATCAZone 1 connector pin 28 via external 12 A fuse
4. 48V Return B Feed	Power return from B' bus	Connects to ATCAZone 1 connector pin 29 via external 12 A fuse
5. Enable A Feed	When connected to RTN A, turns ON isolated open collector A enabled' device (See Note 3)	Connects to ATCAZone 1 connector pin 32 via external 1 A fuse. Used to signal to management suystem correct board insertion and presence of A' bus
6. Enable B Feed	When connected to RTN B, turns ON isolated open collector B enabled' device (See Note 3)	Connects to ATCAZone 1 connector pin 27 via external 1 A fuse. Used to signal to management suystem correct board insertion and presence of B' bus
7. SHELF_GND	Shelf/Chassis/Safety Ground	
8. +5.0V Management Power	+5.0V Management Power - Blue Service LED	
9. +3.3V Management Power	3.3V Isolated Management Power Output	
10. Address	I^2C Address	I^2C lines, address strapping
11. Data	I^2C Data	I^2C lines, serial data
12. Clock	I^2C Clock	I^2C lines, clock line input
13. LOGIC_GND	Logic/Secondary/Isolated Ground	
14. ALARM	Opto-Isolated -48V A/B Feed Loss or Open Fuse Alarm with respect to LOGIC_GND	
15. -48V_OUT	OR'd and Inrush Protected -48VDC Output	The -48VDC Output connects directly to the Input of an External DC-DC Converter
16. Holdup Trim	Adjustable 50 to 95 V Hold Up Trim	
17. VRTN_OUT	OR'd and Inrush Protected -VRTN Output	The VRTN_Out connects directly to the Input of an External DC-DC Converter
18. Holdup Capacitor	Holdup/Bulk Capacitor output voltage	

Notes:
1. Regulation band over line, load and temperature.
2. Measured at 20 MHz with external 22 µF Tantalum in parallel with 1 µF ceramic, 25 V rated low ESR type capacitors across each output.
3. Both Enables (A/B) have to be connected to their respective RTNS to enable the Internal power management I^2C.
4. All specifications are typical at nominal line, T_A = 25 °C unless otherwise indicated.
5. All specifications are subject to change without notice.
6. Technical Reference Notes and Application Notes should be consulted for complete product details
7. Warranty 2 years.

Mechanical Drawing

IPM300

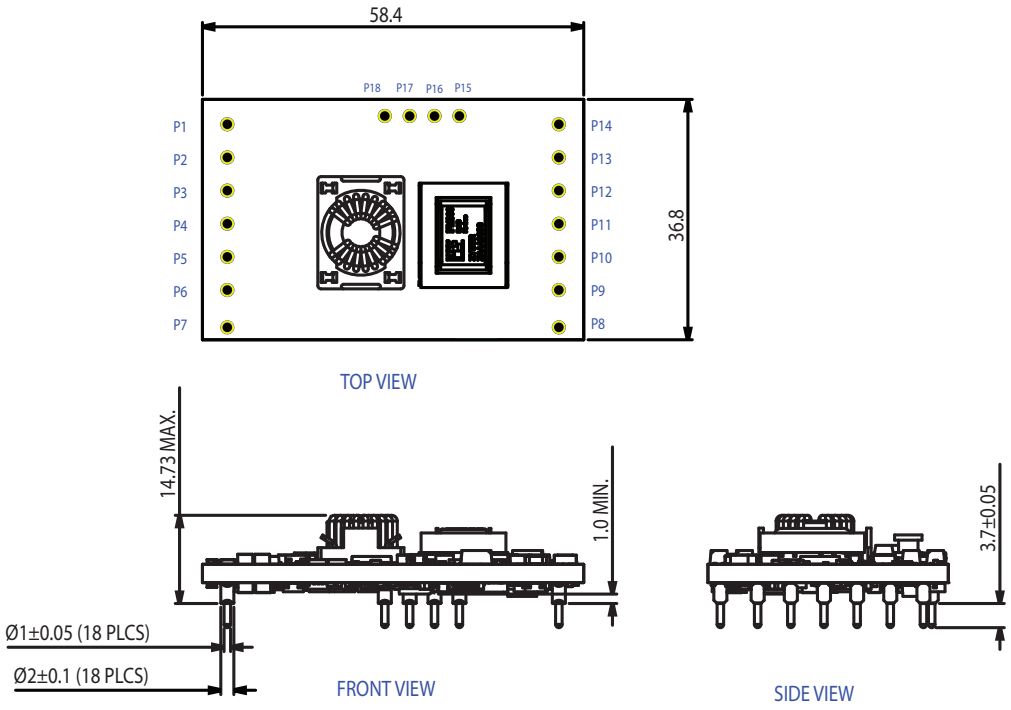

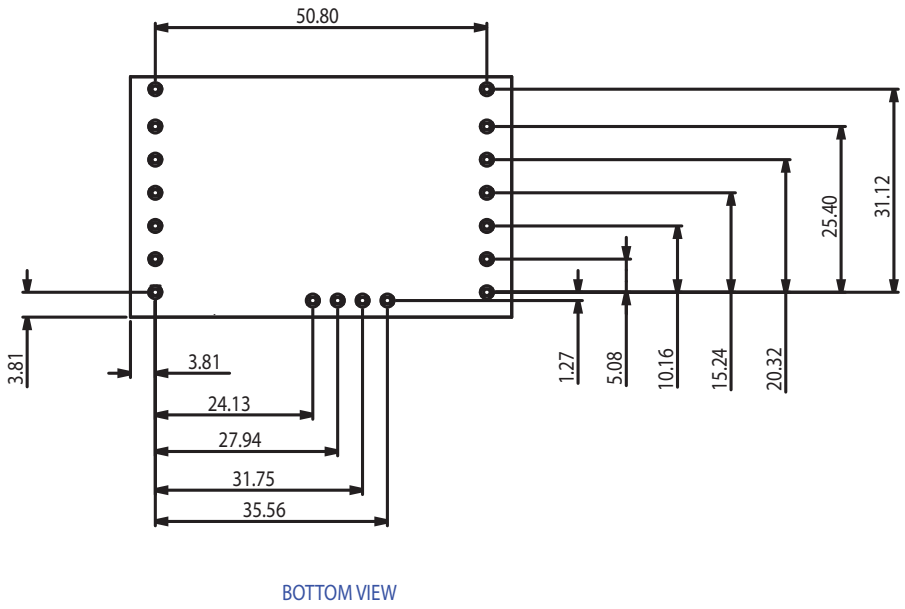

Note: Dimensions in mm.

Americas
5810 Van Allen Way
Carlsbad, CA 92008
USA
Telephone: +1 760 930 4600
Facsimile: +1 760 930 0698

Europe (UK)
Waterfront Business Park
Merry Hill, Dudley
West Midlands, DY5 1LX
United Kingdom
Telephone: +44 (0) 1384 842 211
Facsimile: +44 (0) 1384 843 355

Asia (HK)
14/F, Lu Plaza
2 Wing Yip Street
Kwun Tong, Kowloon
Hong Kong
Telephone: +852 2176 3333
Facsimile: +852 2176 3888

For global contact, visit:
www.Emerson.com/EmbeddedPower
techsupport.embeddedpower@emerson.com

While every precaution has been taken to ensure accuracy and completeness in this literature, Emerson Network Power assumes no responsibility, and disclaims all liability for damages resulting from use of this information or for any errors or omissions.

Emerson Network Power.
The global leader in enabling business-critical continuity.

- AC Power
- Connectivity
- DC Power
- Embedded Computing
- **Embedded Power**
- Monitoring
- Outside Plant
- Power Switching & Controls
- Precision Cooling
- Racks & Integrated Cabinets
- Services
- Surge Protection

EmersonNetworkPower.com

Emerson Network Power and the Emerson Network Power logo are trademarks and service marks of Emerson Electric Co.
©2011 Emerson Electric Co.