ARTESYN LDO03C SERIES

15 Watts



Advanced Energy's Artesyn LDO03C series non-isolated DC-DC converter is designed for cost- and space-sensitive applications. It has a wide 3–13.8 Vdc input range and offers a 0.59–5.1 Vdc adjustable output that accommodates a wide variety of silicon power needs. Capable of delivering up to 3 amps, the converter has a typical efficiency of 90%. A remote enable facility is provided as standard and remote 'power good' indication is available as an option.

Data Sheet

Total Power:

15 Watts

Input Voltage:

3 - 13.8 Vdc

# of Outputs:

Single

SPECIAL FEATURES

- 3 A output current rating
- Input voltage range: 3 - 13.8 Vdc
- Adjustable out voltage: 0.59 - 5.1 V
- Optional factory setting with power good
- Excellent transient response
- Power enable
- Minimum airflow
- Small package
- Termination voltage capability
- RoHS compliant

SAFETY

- UL, cUL 62368-1
- TÜV Product Service (EN62368)
- IEC62368

RoHS

©2020 Advanced Energy Industries, Inc.

ELECTRICAL SPECIFICATIONS

Input		
Input range:		3 - 13.8 Vdc
Input current: Input current (max.):	Minimum load Remote OFF See Note 3	50 mA 5 mA 3 A @ Io max.
Start-up time	Power up Remote ON/OFF	3 ms 2 ms
Output		
Maximum power:	See Note 5	0.59 - 5.1 V
Output setpoint accuracy:	0.1% trim resistors	±1.0%
Line regulation:	Low line to high line	±0.5%
Load regulation:	Full load to min. load	±0.5%
Min./max. load:		0 A/3 A
Overshoot:	At turn-on	0.5% max.
Undershoot:	At turn-off	100 mV max.
Ripple and noise 5 Hz to 20 MHz:	See Note 1	25 mV Vin = 5 V, Vout = 2.5 V
Transient response:	See Note 1, 2	235 mV max. deviation 20 µs recovery to within regulation band
General		
Efficiency (high input):	Vin = 5 V, Vo = 2.5 V, Io = 3 A	90%
Switching frequency:	Fixed	1.5 MHz
Material flammability:		UL94V-0
Weight:		1.7 g (0.06 oz.)
MTBF:	12 V @ 40 °C, 100% load Bellcore 332	10,000,000 hours
Coplanarity:	Surface mount models	50 µm

ENVIRONMENTAL SPECIFICATIONS

Thermal performance:	Operating ambient	-40 °C to +85 °C
See Note 5	Non-operating ambient	-40 °C to +125 °C
Protection		
Short-circuit:		Hiccup, non-latching
Overvoltage protection:	IEC68-2-6 to the levels of IEC721-3-2	Hiccup, non-latching
Recommended System Capacitance		
Input:	See Note 6	0 µF
Output:	See Note 7	0 µF

ORDERING INFORMATION

Model Number [3,5]	Input Voltage	Output Voltage	Output Current (Min.)	Output Current (Max.)	Efficiency (Typical)	Regulation	
						Line	Load
LDO03C-005W05-VJ	3 - 13.8 Vdc	0.59 - 5.1 V	0 A	3 A	90%	±0.2%	±0.5%
LDO03C-005W05-HJ	3 - 13.8 Vdc	0.59 - 5.1 V	0 A	3 A	90%	±0.2%	±0.5%
LDO03C-005W05-SJ	3 - 13.8 Vdc	0.59 - 5.1 V	0 A	3 A	90%	±0.2%	±0.5%

PART NUMBER SYSTEM WITH OPTIONS

Product Family	Rated Output Current	Performance	Input Voltage	Number of Pins Type of Output	Output Voltage	Mounting Option	Custom Option	RoHS Compliance
LDO	03	C	00	5W	05	V	X	J
Product Family LDO = LDO Series	**Rated Output Current** 03 = 3 Amp	**Performance** C = Cost Optimized	**Input Voltage** 00 = 3 - 13.8 V	**Type of Output** 5 W = 5 Pins and Wide Output	**Output Voltage** 05 = 0.59 - 5.1 V	**Mounting Option** V = Vertical H = Horizontal S = Horizontal SMT VS = Vertical SMT	**Custom Option**	**RoHS Compliance** J = Pb free (RoHS 6/6 compliant)

OUTPUT VOLTAGE ADJUSTMENT OF THE LDO03C SERIES

The ultra-wide output voltage trim range offers major advantages to users who select the LDO03C series. It is no longer necessary to purchase a variety of modules in order to cover different output voltages. The output voltage can be trimmed in a range of 0.59 - 5.1 Vdc. When the LDO03C converter leaves the factory, the output has been adjusted to the default voltage of 0.59 V.

Notes:

1. Measured as per recommended system capacitance. See Technical Reference Note.
2. di/dt = 10 A/µs, Vin = Nom, Tc = 25 °C, load change = 0.50 Io to full Io and full Io to 0.50.
3. External input fusing is recommended.
4. Additional part numbers may be available with different output voltages.
5. Airflow dependent, 100 LFM minimum required.
6. No capacitors needed for ripple current stability.
7. No capacitors needed for stability.
8. TSE RoHS 5/6 (non Pb-free) compliant versions may be available on special request, please consult your local sales representative for details.
9. NOTICE: Some models do not support all options. Please contact your local Artesyn Embedded Power representative or use the on-line model number search tool at http://www.artesyn.com to find a suitable alternative.

MECHANICAL DRAWINGS

Vertical Mount

Dimensions in inches (mm). Tolerances es (unless otherwise specified) 2 Places ±0.030 (±0.76) 3 Places ±0.010 (±0.25)

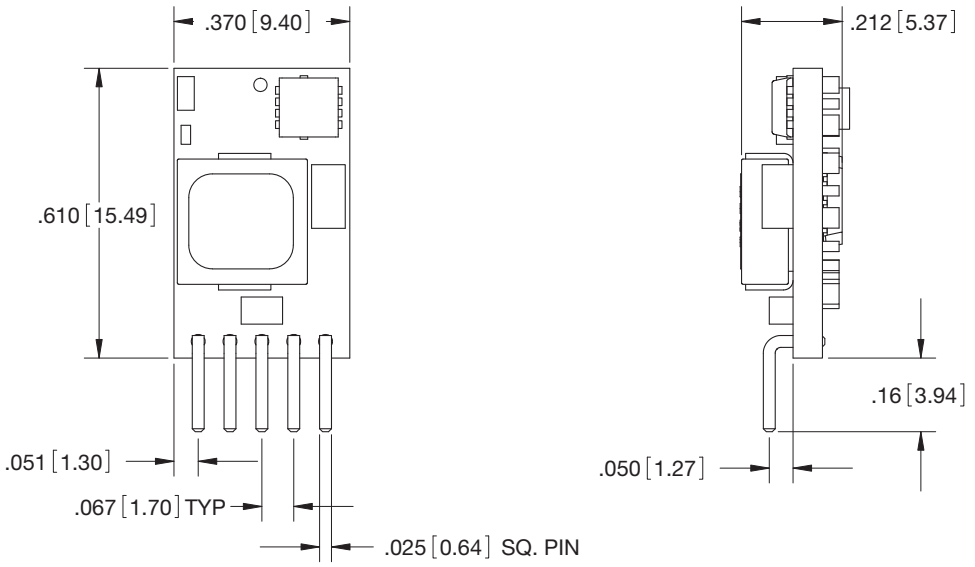

Horizontal Mount

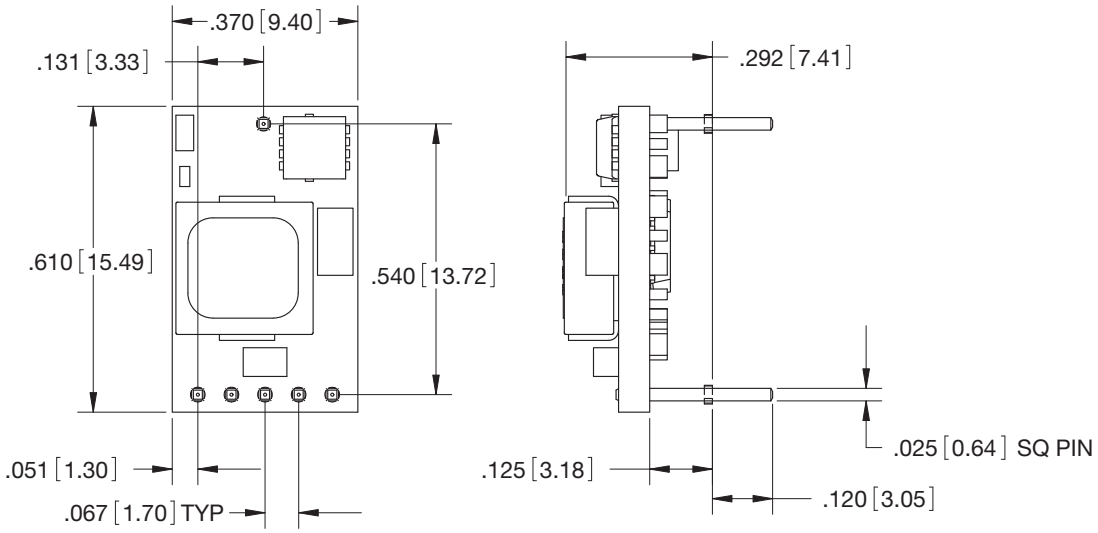

MECHANICAL DRAWINGS

Horizontal Mount

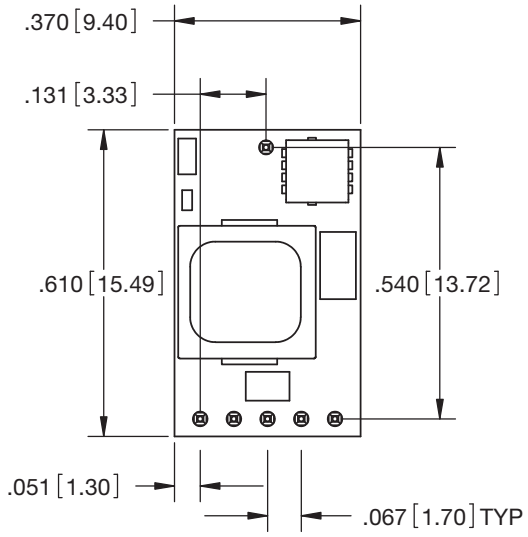

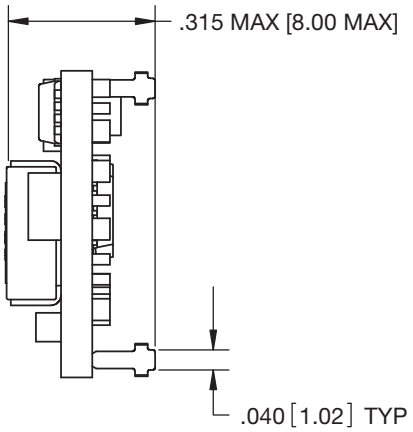

Pin Assignments	
Single Output	
1	Enable
2	Vin
3	Common/RTN
4	Vout
5	PG/Trim
6	Mech Pin (Horz/SMT only)

*This is a Preliminary Datasheet. Artesyn Embedded Power reserves the right to make changes to the information contained herein without notice and assumes no liability as a result of its use or application.

ABOUT ADVANCED ENERGY

Advanced Energy (AE) has devoted more than three decades to perfecting power for its global customers. AE designs and manufactures highly engineered, precision power conversion, measurement and control solutions for mission-critical applications and processes.

Our products enable customer innovation in complex applications for a wide range of industries including semiconductor equipment, industrial, manufacturing, telecommunications, data center computing, and medical. With deep applications know-how and responsive service and support across the globe, we build collaborative partnerships to meet rapid technological developments, propel growth for our customers, and innovate the future of power.

PRECISION | POWER | PERFORMANCE

For international contact information,
visit advancedenergy.com.

powersales@aei.com (Sales Support)
productsupport.ep@aei.com (Technical Support)
+1 888 412 7832

Specifications are subject to change without notice. Not responsible for errors or omissions. ©2020 Advanced Energy Industries, Inc. All rights reserved. Advanced Energy®, AE® and Artesyn™ are U.S. trademarks of Advanced Energy Industries, Inc.

ENG-LDO03C-235-01 12.25