ARTESYN LDO10C SERIES

50 Watts

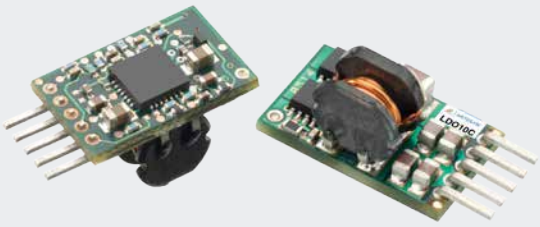

Advanced Energy's Artesyn LDO10C series non-isolated DC-DC converter is designed for cost- and space-sensitive applications. It has a wide 3–13.8 Vdc input range and offers a 0.59–5.1 Vdc adjustable output that accommodates a wide variety of silicon power needs. Capable of delivering up to 10 amps, the converter has a typical efficiency of 94%. A remote enable facility is provided as standard.

Data Sheet

Total Power:

50 Watts

Input Voltage:

3 - 13.8 Vdc

# of Outputs:

Single

SPECIAL FEATURES

- 10 A output current rating
- Input voltage range: 3 - 13.8 Vdc
- Adjustable output voltage: 0.59 - 5.1 V
- Excellent transient response
- Power enable (5-pin model)
- Minimum airflow
- Small package
- Termination voltage capability
- RoHS compliant

SAFETY

- UL, cUL 60950-1
- TÜV Product Service (EN60950)
- CE

©2020 Advanced Energy Industries, Inc.

ELECTRICAL SPECIFICATIONS

Input		
Input voltage range		3 - 13.8 Vdc
Input current	Minimum load Remote OFF	50 mA 5 mA
Input current (max.)	See Note 3	10 A @ Io max.
Start-up time	Power up Remote ON/OFF	3 ms 2 ms
Output		
Output voltage	See Note 5	0.59 - 5.1 V
Output setpoint accuracy	0.1% trim resistors	±1.0%
Line regulation	Low line to high line	±0.2%
Load regulation	Full load to min. load	±0.5%
Min./max. load		0 A/10 A
Overshoot	At turn-on	0.5% max.
Undershoot	At turn-off	100 mV max.
Ripple and noise 5 Hz to 20 MHz	See Note 1	20 mV Vin = 5 V, Vout = 2.5 V
Transient response	See Note 1, 2	130 mV max. deviation 15 µs recovery to within regulation band
General		
Efficiency (high input)	Vin = 5 V, Vo = 2.5 V, Io = 6 A	91%
Switching frequency	Fixed	620 kHz
Material flammability		UL94V-0
Weight		1.899 g (0.067 oz.)
MTBF	12 V @ 40 °C, 100% load Bellcore 332	>8,222,210 hours
Coplanarity	Surface mount models	150 µm

ENVIRONMENTAL SPECIFICATIONS

Thermal performance	Operating ambient temperature	-40 °C to +85 °C
See Note 5	Non-operating ambient temperature	-40 °C to +125 °C
Protection		
Short-circuit	Hiccup, non-latching	
Recommended System Capacitance		
Input	See Note 6	0 µF
Output	See Note 7	0 µF

ORDERING INFORMATION

Model Number [3,5]	Output Power (Max.)	Input Voltage	Output Voltage	Output Current (Min.)	Output Current (Max.)	Efficiency (Typical)	Regulation	
							Line	Load
LDO10C-005W05-VJ	50 W	3 - 13.8 Vdc	0.59 - 5.1 V	0 A	10 A	94%	±0.2%	±0.5%
LDO10C-005W05-V1J	50 W	3 - 13.8 Vdc	0.59 - 5.1 V	0 A	10 A	94%	±0.2%	±0.5%
LDO10C-005W05-HJ	50 W	3 - 13.8 Vdc	0.59 - 5.1 V	0 A	10 A	94%	±0.2%	±0.5%
LDO10C-005W05-SJ	50 W	3 - 13.8 Vdc	0.59 - 5.1 V	0 A	10 A	94%	±0.2%	±0.5%

PART NUMBER SYSTEM WITH OPTIONS

Product Family	Rated Output Current	Performance	Input Voltage	Number of Pins Type of Output	Output Voltage	Mounting Option	Custom Option	RoHS Compliance
LDO	10	C	00	5W	05	V	1	J
Product Family LDO = LDO Series	**Rated Output Current** 10 = 10 Amp	**Performance** C = Cost Optimized	**Input Voltage** 00 = 3 - 13.8 V	**Type of Output** 5 W = 5 Pins and Wide Output	**Output Voltage** 05 = 0.59 - 5.1 V	**Mounting Option** V = Vertical H = Horizontal S = SMT	**Custom Option** 1 = Vertical, 0.199" pin length	**RoHS Compliance** J = Pb free (RoHS 6/6 compliant)

OUTPUT VOLTAGE ADJUSTMENT OF THE LDO10C SERIES

The ultra-wide output voltage trim range offers major advantages to users who select the LDO10C series. It is no longer necessary to purchase a variety of modules in order to cover different output voltages. The output voltage can be trimmed in a range of 0.59 - 5.1 Vdc. When the LDO10C converter leaves the factory, the output has been adjusted to the default voltage of 0.59 V.

Notes:
1. Measured as per recommended system capacitance. See Application Note 186.
2. di/dt = 10 A/µs, Vin = Nom, Tc = 25 °C, load change = 0.50 Io to full Io and full Io to 0.50.
3. External input fusing is recommended.
4. Additional part numbers may be available with different output voltages.
5. Airflow dependent, 100 LFM minimum required.
6. No capacitors needed for ripple current stability.
7. No capacitors needed for stability.
8. NOTICE: the input voltage must be greater than the programmed output voltage. The max duty cycle is 95%. These non-isolated dc-dc modules are buck converters.

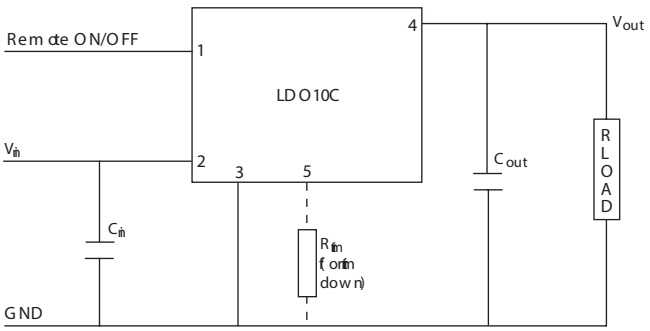

MECHANICAL DRAWINGS

Vertical Mount (Model LDO10C-005W05-VJ)

Dimensions in inches (mm). Tolerances (unless otherwise specified) 2 Places ±0.030 (±0.76) 3 Places ±0.010 (±0.25)

Pin Assignments	
Pin No.	*Function*
1	Enable
2	Vin
3	Common/RTN
4	Vout
5	Trim

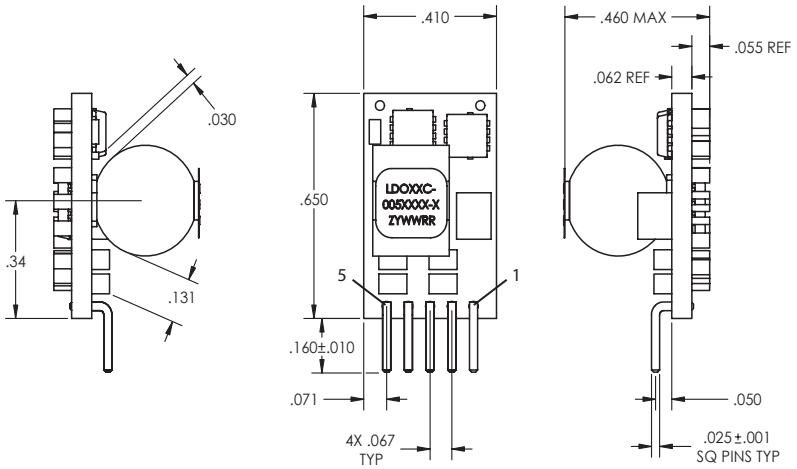

Vertical Mount (Model LDO10C-005W05-V1J)

Dimensions in inches (mm). Tolerances (unless otherwise specified) 2 Places ±0.030 (±0.76) 3 Places ±0.010 (±0.25)

Pin Assignments	
Pin No.	*Function*
1	Enable
2	Vin
3	Common/RTN
4	Vout
5	Trim

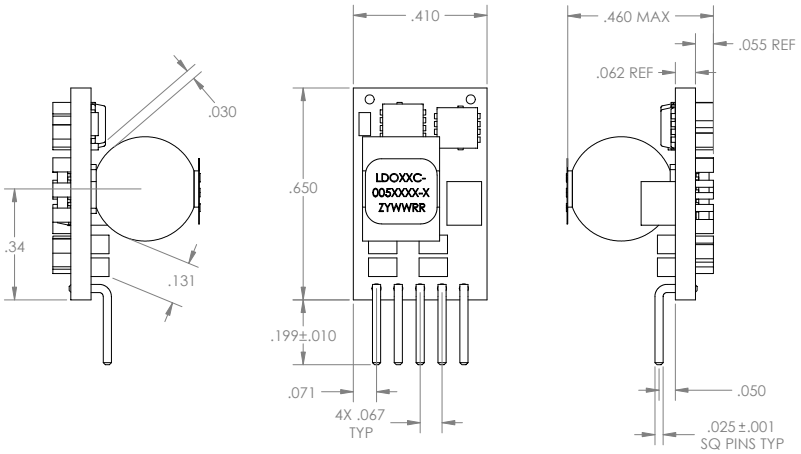

MECHANICAL DRAWINGS (CONTINUED)

Horizontal Mount (Model LDO10C-005W05-HJ)

Dimensions in inches (mm). Tolerances (unless otherwise specified) 2 Places ±0.030 (±0.76) 3 Places ±0.010 (±0.25)

Pin Assignments	
Pin No.	*Function*
1	Enable
2	Vin
3	Common/RTN
4	Vout
5	Trim
6	Mech Pin

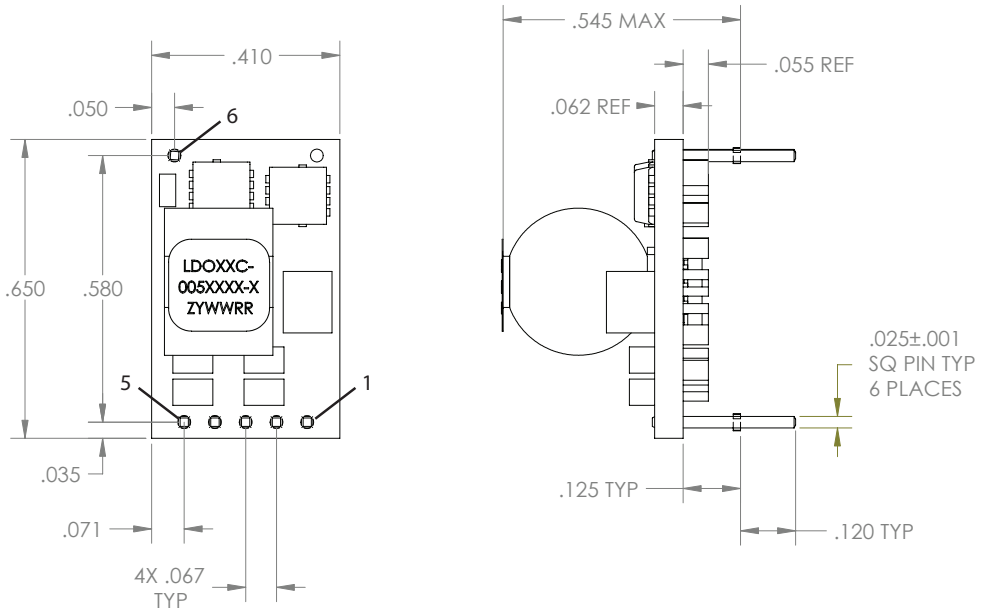

Surface Mount (Model LDO10C-005W05-SJ)

Dimensions in inches (mm). Tolerances (unless otherwise specified) 2 Places ±0.030 (±0.76) 3 Places ±0.010 (±0.25)

Pin Assignments	
Pin No.	*Function*
1	Enable
2	Vin
3	Common/RTN
4	Vout
5	Trim
6	Mech Pin
7	Mech Pin

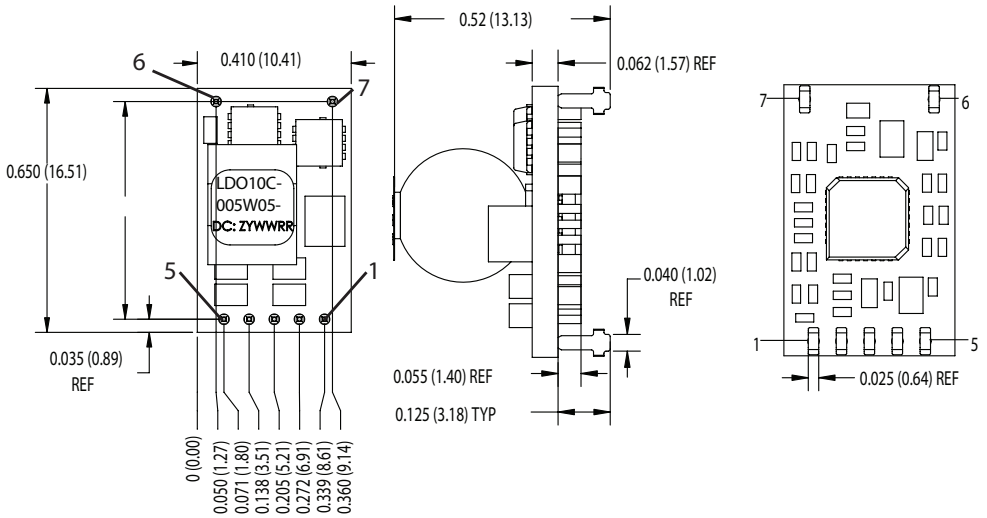

ABOUT ADVANCED ENERGY

Advanced Energy (AE) has devoted more than three decades to perfecting power for its global customers. AE designs and manufactures highly engineered, precision power conversion, measurement and control solutions for mission-critical applications and processes.

Our products enable customer innovation in complex applications for a wide range of industries including semiconductor equipment, industrial, manufacturing, telecommunications, data center computing, and medical. With deep applications know-how and responsive service and support across the globe, we build collaborative partnerships to meet rapid technological developments, propel growth for our customers, and innovate the future of power.

PRECISION | POWER | PERFORMANCE

For international contact information,
visit advancedenergy.com.

powersales@aei.com (Sales Support)
productsupport.ep@aei.com (Technical Support)
+1 888 412 7832

Specifications are subject to change without notice. Not responsible for errors or omissions. ©2020 Advanced Energy Industries, Inc. All rights reserved. Advanced Energy®, AE® and Artesyn™ are U.S. trademarks of Advanced Energy Industries, Inc.

ENG-LDO10C-235-01 12.25