ARTESYN LGA C SERIES

15 - 100 Watts



Advanced Energy's Artesyn LGA03C series is a 3 amp non-isolated DC-DC converter that provides a cost-effective high density power solution in a low profile, surface-mount land grid array package for space sensitive applications. The converter accepts a wide range 3–14Vdc input and has a 15 watt power output rating. Its output voltage is adjustable from 0.59 to 5.1 Vdc to accommodate a wide variety of silicon power needs. Standard features include remote sense, remote enable and voltage margining. LGA03C series converters offer resistor-programmable undervoltage lockout, as well as non-latching short-circuit and overvoltage protection.

DATA SHEET

Total Power:

15 - 100 W

# of Outputs:

Single

RoHS

SPECIAL FEATURES

- 3, 6, 10 and 20 A output current rating
- Wide input voltage range; up to 14 V
- Adjustable output voltage; 0.59-5.1 V
- Excellent transient response
- High efficiency
- Output margining
- Power enable
- Minimal airflow requirement
- Termination voltage capability
- Ultra compact profile and footprint
- RoHS compliant
- Remote sense
- Termination voltage capability

SAFETY

- Designed to meet EN60950
- International Standards for Solderability: J-STD-002B IEC-60068-2-58

©2021 Advanced Energy Industries, Inc.

ELECTRICAL SPECIFICATIONS

Output		3/6/10 A Models	20 A Model
Output voltage	See Page 3	0.59 - 5.1 V	
Output setpoint accuracy	0.1% trim resistors	±1.0%	
Line regulation		±0.2%	
Load regulation		±0.5%	
Max Current Max Power		15/30/50 W	100 W
Overshoot	At turn-on	0%	
Undershoot	At turn-off	0 mV	
Ripple and noise 5 Hz to 20 MHz	See Note 1 V_{in} = 5 V, V_{out} = 2.5 V	20/25/30 mV	30 mV
Transient response	See Notes 1 and 2 V_{in} = 5 V, V_{out} = 2.5 V	100/160/160 mV 15 µs recovery to within regulation band	1175 mV 15 µs recovery to within regulation band
Input			
Input voltage range[3]		3 - 14 Vdc	4.5 - 14 Vdc
Input current	Enable On at (0 A) Enable Off	50 mA 5 mA	
Start-up time	Power up Enable On/Off	3 ms 2 ms	
General			
Efficiency	V_{in} = 5 V_{out}, V_o = 2.5 V, I_{out} = 50% I_{max}	92% typ.	92% typ.
Switching frequency		1 MHz	800 kHz
Material flammability		UL94V-0	
MTBF	12 V @ 40 °C 100% load Bellcore 332	> 20,000,000 hours	
Coplanarity		150 µm	
Thermal performance See Technical Reference Note	Operating ambient Non-operating ambient	-40 °C to +85 °C -40 °C to +125 °C	

Protection		
Short circuit	Hiccup, non-latching	
Overvoltage	Hiccup, non-latching	
Mininum Recommended System Capacitance	**3/6/10 A Model**	**20 A Model**
Short circuit	1 µF	10 µF
Overvoltage	10 µF	50 µF

ORDERING INFORMATION

Standard Model Numbers	Output Power (Max.)	Input Voltage	Output Voltage	Output Current		Efficiency (Typical)	Regulation	
				Min	Max		Min	Max
LGA03C-00SADJJ	15 W	3 - 14.0 Vdc	0.59 - 5.1 Vdc	0 A	3 A	92%	±0.2%	±0.5%
LGA06C-00SADJJ	30 W	3 - 14.0 Vdc	0.59 - 5.1 Vdc	0 A	6 A	92%	±0.2%	±0.5%
LGA10C-00SADJJ	50 W	3 - 14.0 Vdc	0.59 - 5.1 Vdc	0 A	10 A	92%	±0.2%	±0.5%
LGA20C-01SADJJ	100 W	4.5 - 14.0 Vdc	0.59 - 5.1 Vdc	0 A	20 A	91%	±0.2%	±0.5%

MODEL NUMBER SYSTEM WITH OPTIONS



Product Family	Rated Output Current		Performance	Input Voltage	Type of Output	Options	RoHS Compliance
LGA	XX	-	C	00	SADJ	X	J
	Rated Output Current 03 = 3 Amp 06 = 6 Amp 10 = 10 Amp 20 = 20 Amp		**Performance** C = Cost Optimized	**Input Voltage** 00 = 3 - 14.0 V 01 = 4.5 - 14.0 V	Type of Output Single Adjustable Output	**Options** X = Various Options (see Sales Rep)	**RoHS Compliance** J = Pb free (RoHS 6/6 compliant)

HEATSINK NUMBER SYSTEM WITH OPTIONS

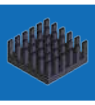

Product Family	Product		Purpose	Height*
LGA	XX	-	C	00
Land Grid Array	Heatsink		Heatsink and Adhesive	**Total Height** (LGA20 + Heatsink) 045 = 0.45" 048 = 0.48" 050 = 0.50"

* Height is the total height of the LGA20C-00SADJJ with heatsink attached.

APPLICATION EQUATIONS

Setting Output Voltage

Default output voltage: 0.591 V

The outut voltage may be adjusted with a resistor placed between the "Trim" and "-Sense" pin.

The formula for calcuating the value of this resistor is:

$$R_{trim}\ (k\Omega) = \frac{1.182}{V_{out} - 0.591}$$

See Technical Reference Note for other trimming methods.

Setting Margin Control

To margin the output up, pull the margin control pin high. To margin down, pull the margin control pin low. If the pin is left floating, the feature is disabled. The maximum margining range is ±33% of the oputput default voltage setting, with maximum output at 5.5 V

$$V_{margin_up} = 0.1182 * \frac{R_{margin}}{R_{ofs^+}} * \frac{R_{trim} + 2k}{R_{trim}}$$

$$V_{margin_down} = 0.1182 * \frac{R_{margin}}{R_{ofs^-}} * \frac{R_{trim} + 2k}{R_{trim}}$$

Setting Output Voltage

Default Turn-on voltage: 2.9 V (300 mV Hysteresis)

The Turn-on voltage may be adjusted with a resistor placed between the “Enable” and “Ground” pins.

The formula for calculating the value of this resistor is:

$$R_{uvlo}\ (k\Omega) = \frac{14.81 * 6.81}{(6.81 * V_{Turn_on}) - 18.16}$$

***ONLY USE WITH OPEN COLLECTOR DEVICE**
***DO NOT DRIVE PIN WITH A VOLTAGE**

Setting Under Voltage Lock Out – 20 A Models

Default Turn-on voltage: 4.3 V (300 mV Hysteresis)

The Turn-on voltage may be adjusted with a resistor placed between the “Enable” and “Ground” pins.

The formula for calculating the value of this resistor is:

$$R_{uvlo}\ (k\Omega) = \frac{30.1 * 4.22}{(8.577 * V_{Turn_on}) - 34.32}$$

***ONLY USE WITH OPEN COLLECTOR DEVICE**
***DO NOT DRIVE PIN WITH A VOLTAGE**

Notes:
1. Measured as per recommended minimum system capacitance.
2. di/dt = 10 A/ µs,12 Vin = Norm, Tc = 25 °C, load change = 50% lo 100% Imax.
3. Internal input capacitance is rated 16 Vdc maximum.

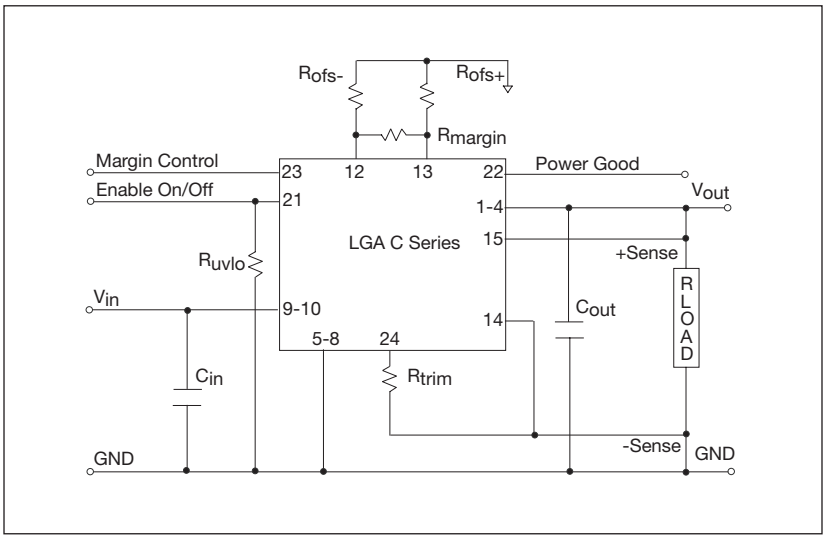

External input fusing is recommended.

MECHANICAL DRAWING AND FOOTPRINT

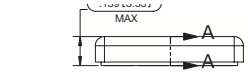

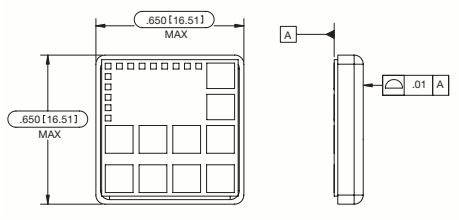

Recommended System Board Footprint

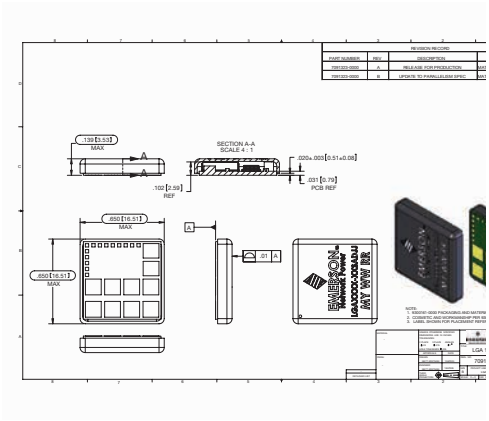

Tolerance Note: ±0.010 (0.25)

Recommended Solder Paste Stencil

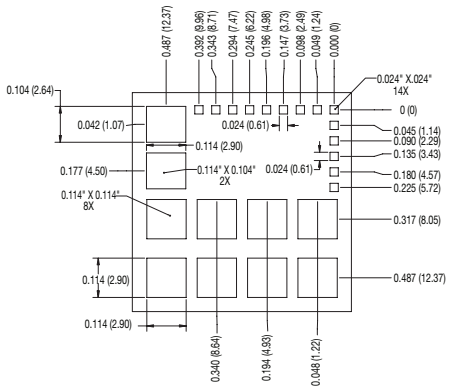

Component Height	
Model #	DIM A in (mm)
LGA03 LGA06 LGA10	0.129 (3.27)
LGA20	0.210 (5.33)

Pin Assignments	
Single Output	
1	Vout
2	Vout
3	Vout
4	Vout
5	GND
6	GND
7	GND
8	GND
9	Vin
10	Vin
11	NC
12	- Offset
13	+ Offset
14	- Sense
15	+ Sense
16	NC
17	NC
18	NC
19	NC
20	NC
21	Enable
22	Power Good
23	Margin Control
23	Trim

ABOUT ADVANCED ENERGY

Advanced Energy (AE) has devoted more than three decades to perfecting power for its global customers. AE designs and manufactures highly engineered, precision power conversion, measurement and control solutions for mission-critical applications and processes.

Our products enable customer innovation in complex applications for a wide range of industries including semiconductor equipment, industrial, manufacturing, telecommunications, data center computing, and medical. With deep applications know-how and responsive service and support across the globe, we build collaborative partnerships to meet rapid technological developments, propel growth for our customers, and innovate the future of power.

PRECISION | POWER | PERFORMANCE

For international contact information,
visit advancedenergy.com.

powersales@aei.com (Sales Support)
productsupport.ep@aei.com (Technical Support)
+1 888 412 7832

Specifications are subject to change without notice. Not responsible for errors or omissions. ©2021 Advanced Energy Industries, Inc. All rights reserved. Advanced Energy®, AE® and Artesyn™ are U.S. trademarks of Advanced Energy Industries, Inc.

ENG-LGA3-20C-235-01 1.22