ARTESYN LGA110D DUAL O/P NON-ISOLATED DCDC

110 Amp DC/DC Converter

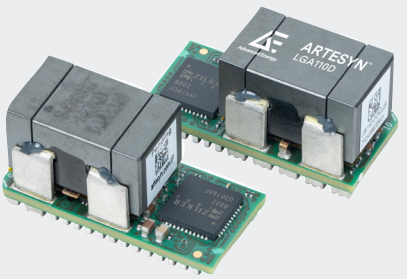

Advanced Energy's Artesyn LGA110D power supply features a 7.5 to 14 VDC input voltage range and 350 W output power rating. It is a new design of high performance non-isolated DC-DC converter focused at providing low voltage and high current power conversion in a unit that can be used in multiple different modes and combinations. The unit has a 2-phase design which can be employed separately creating 2 output voltages, or they can be combined to create a single output voltage. Up to 4 modules can be used in such a way resulting in a single output of up to 440 Amps being created from 1 part number. The operational features include remote On/Off, variable output voltage as well as overcurrent protection, over-voltage protection, and over-temperature protection with control functions being provided by either pin-strap resistors or PMBus control for digital communications.

AT A GLANCE

Total Current

110 A single-mode
55 A dual-mode

Input Voltage

7.5 to 14 VDC

Variable Output

0.5 to 5 VDC

PMBus®
Power Management. Defined.

SPECIAL FEATURES

- Improved substrate uniformity
- 2-phase design
- DUAL or SINGLE output configuration possible
- Stacked module array (up to 4 units) with up to 24 combinations of phase configuration
- High efficiency up to 96%
- Small size: 27.5 mm * 12.8 mm * 13.4 mm
- No minimum load requirement
- Wide operating temperature range
- Exceptional power density; 203 A/sq-inch
- Analogue or Digital control
- IPC9592B compliant (TBD)
- Tape and reel packaging
- Reflow compatible
- Possible to stack up to 4 for 440 A
- I-mon and T-mon supported
- Block-pin termination
- Automatic loop compensation

SAFETY

- Designed to meet EN62368

WARRANTY

- 2 years (Consult factory for extended terms)

PATENT

Pending www.artesyn.com/ep-patents

Pending
artesyn.com/IP

©2023 Advanced Energy Industries, Inc.

TECHNICAL DATA

Electrical Specifications		
Input		
Input voltage range	7.5 VDC to 14 VDC (0.5 V ≤ Vo ≤ 3.3 V) 10 VDC to 14 VDC (3.3 V < Vo ≤ 5.0 V)	
Max input current	40 A	
Input capacitor (internal)	140 uF (10 uF*14 pcs)	
Input capacitor (external) recommended	88 uF (22 uF*4 pcs)[1]	
Output[2]		
Independent output 1 and 2 - 0.5 V to 1 V - 1.8 V - 2.5 V - 3.3 V - 5.0 V	 55 A 50 A 45 A 40 A 35 A	
Combined output 1 and 2 - 0.5 V to 1 V - 1.8 V - 2.5 V - 3.3 V - 5.0 V	 110 A 100 A 90 A 80 A 70 A	
Efficiency @ Vin=12 V, Freq=533 KHz & Ta=25°C - 1.0 V at 110A - 1.8 V at 100A - 2.5 V at 90A - 3.3 V at 80A - 5.0 V at 70A	 Nom 88.5% 92.5% 94% 95% 96%	
Max output power (watts)	350 W	
Output capacitor per output (external)[3]	Dual Outputs 1990 uF	Single Output 3980 uF
Control and Ambient Temperature		
Operating ambient temperature	-40 degC to +85 degC	
Storage temperature	-40 degC to +125 degC	
Switching frequency	533 KHz @ 0.5 V to 5 V	

Note 1. Minimum: 4 x 22 uF/16 V 0805 ceramic caps (C2012X6S1C226M125AC or equivalent)
Note 2. 0.5V can only be set via PMBus command.
Note 3. Dual mode (2 outputs): 2 x 680 uF/6.3 V Polymer Tan caps (T530X687M006ATE010 or equivalent)
+ 6 x 100 uF/6.3 V X6S 1210 ceramic caps (GRM32EC80J107ME20L or equivalent)
+ 3 x 10 uF/16 V X6S 0603 ceramic caps (GRM188C81C106MA73 or equivalent)
Single mode (1 output): 4 x 680 uF/6.3 V Polymer Tan caps (T530X687M006ATE010 or equivalent)
+ 12 x 100 uF/6.3 V X6S 1210 ceramic caps (GRM32EC80J107ME20L or equivalent)
+ 6 x 10 uF/16 V X6S 0603 ceramic caps (GRM188C81C106MA73 or equivalent)

TECHNICAL DATA (CONTINUED)

Model Numbers				
Input Voltage	Output Voltage Range	Output Current	Efficiency	Model Number
7.5 to 14 VDC	0.5 to 5 V	110 A max	See page 2	LGA110D-01DADJJB

Ordering Information								
LGA	110	D	-	01	D	ADJ	J	B
1	2	3		4	5	6	7	8

1 Product family: LGA Series Name
2 Rated output current: 110 - Rated output current = 110 A
3 Performance: D - Digital POL
4 Input voltage: 01 - 7.5 to 14.0 V input voltage range
5 Number of outputs: D - Dual outputs
6 Output type: ADJ - Adjustable output
7 RoHS compliance: J - Pb free (RoHS 6/6 compliant)
8 B - New designed version

BLOCK DIAGRAM

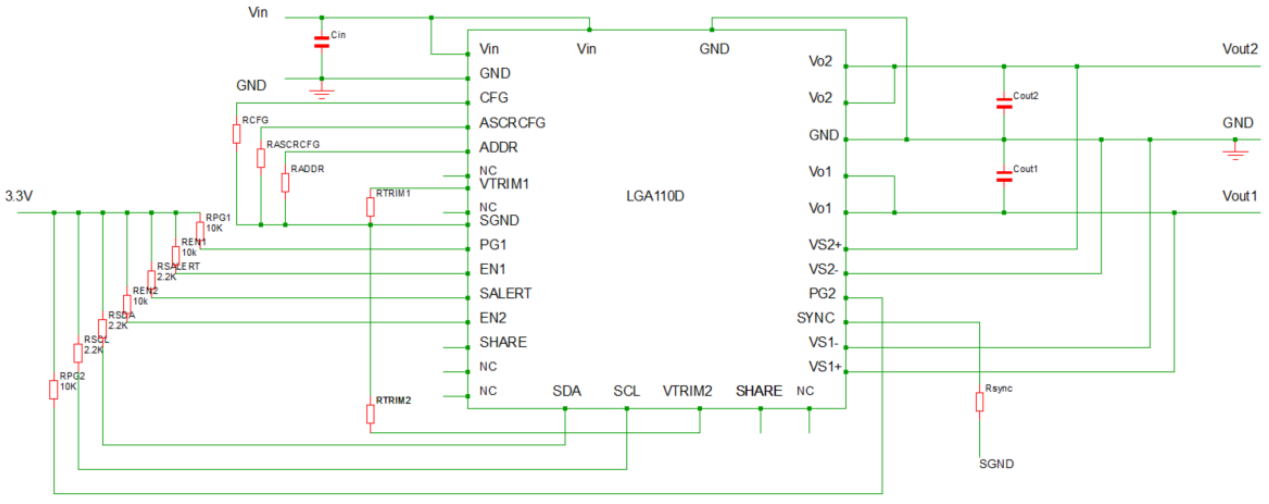

Single unit, 2-phase dual O/P configuration

BLOCK DIAGRAM (CONTINUED)

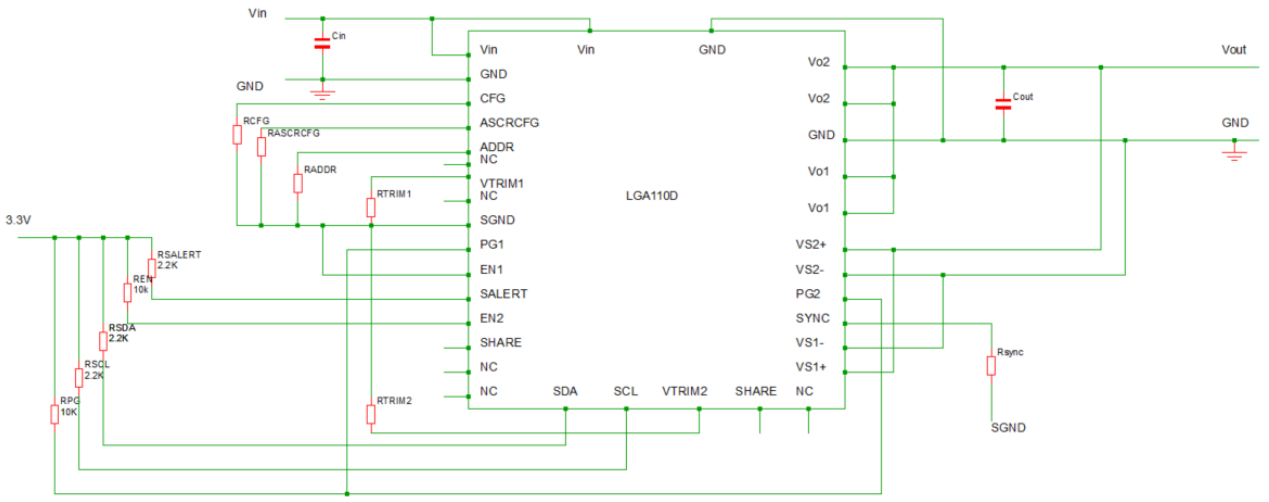

Single unit, 2-phase single O/P configuration

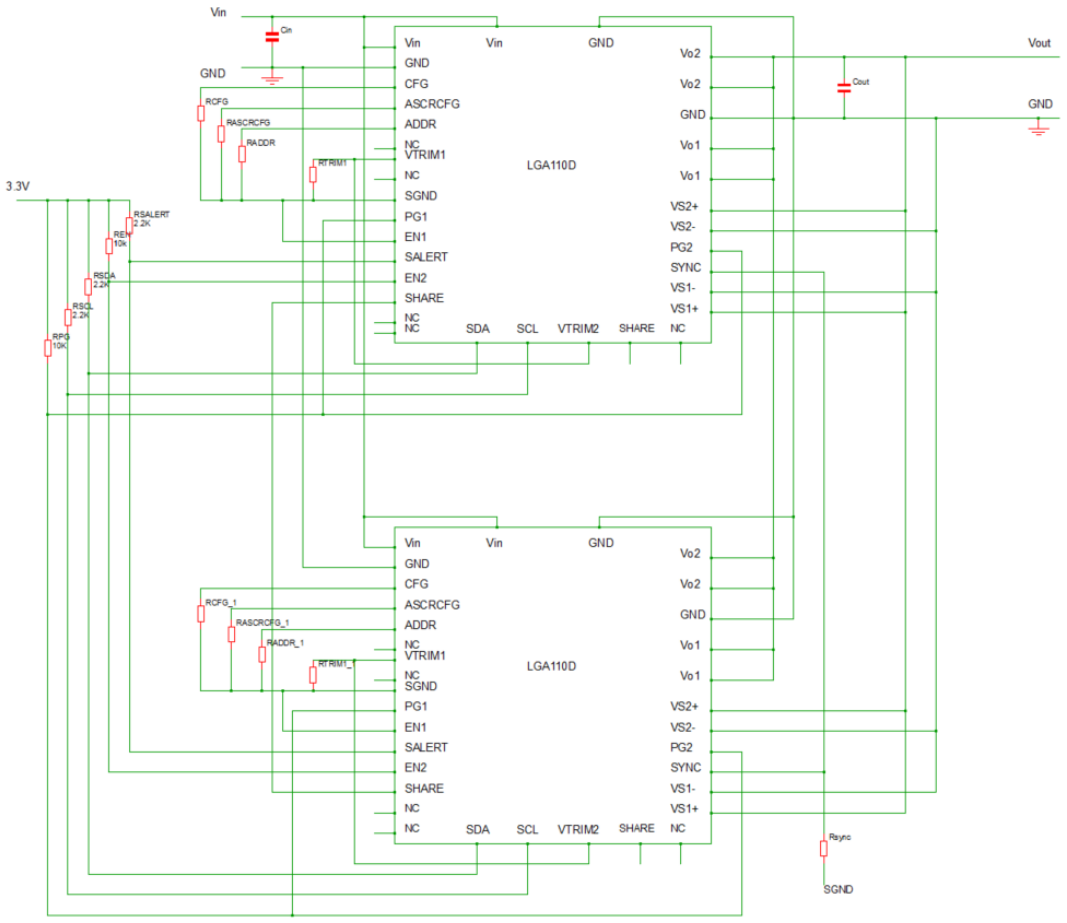

Two units, 4-phase single O/P configuration

MECHANICAL DRAWINGS

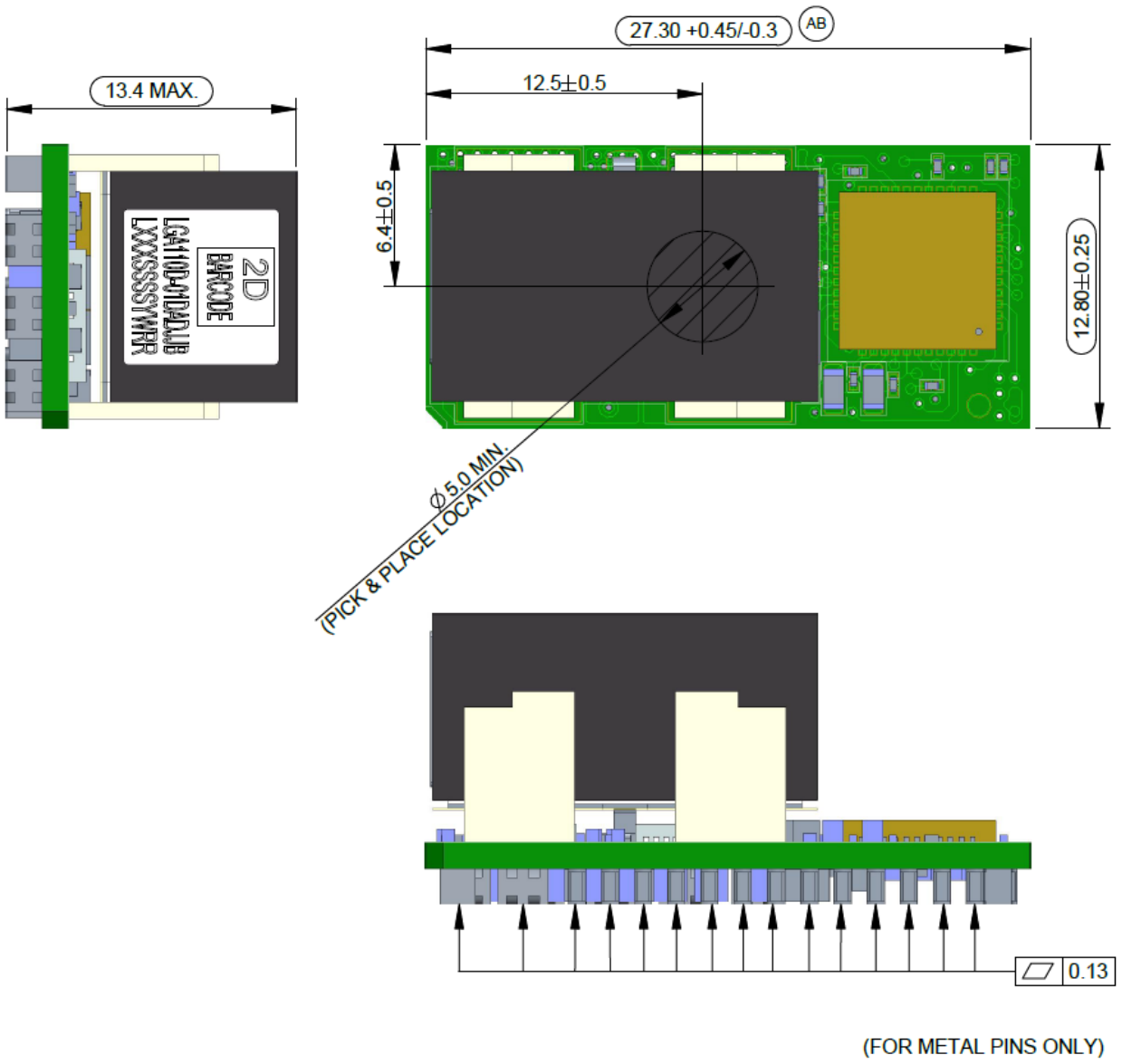

Notes: Dimensions are in millimeters.

MECHANICAL DRAWINGS

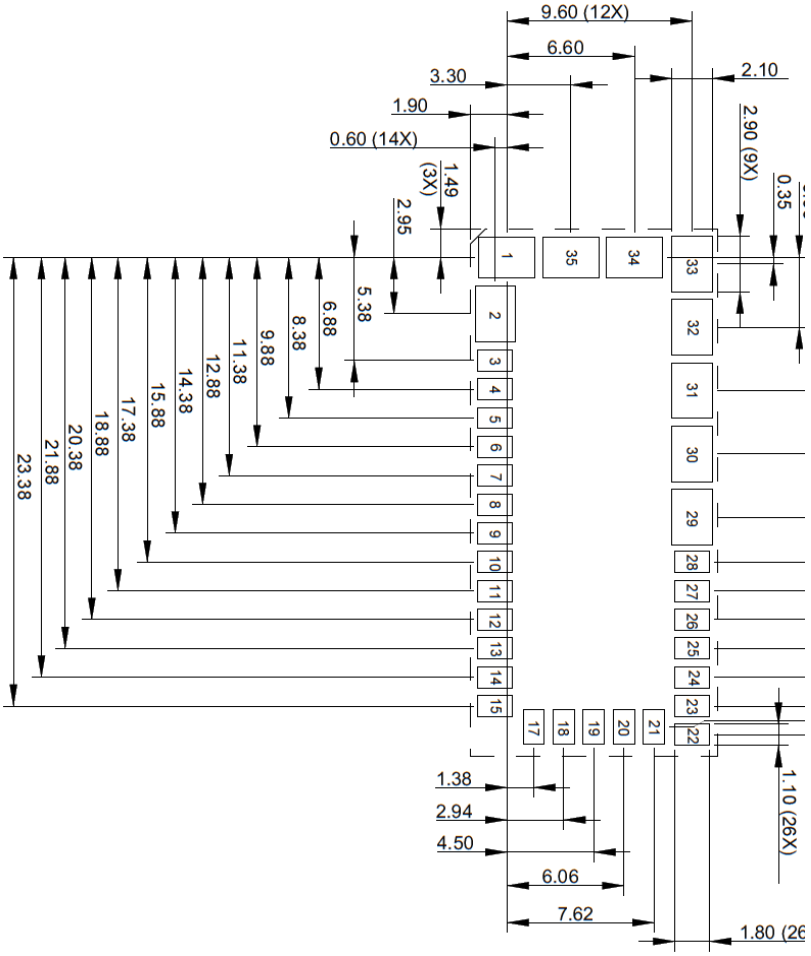

PIN#	Function	PIN#	Function
1	VIN	18	SCL
2	GND	19	VTRIM2
3	CFG	20	SHARE
4	ASCRCFG	21	-
5	ADDR	22	VS1-
6	-	23	VS1+
7	VTRIM1	24	SYNC
8	-	25	PG2
9	SGND	26	VS2-
10	PG1	27	VS2+
11	EN1	28	VO1
12	SALRT	29	VO1
13	EN2	30	GND
14	SHARE	31	VO2
15	-	32	VO2
16	-	33	GND
17	SDA	34	VIN

REMARKS:
TOLERANCES DECIMAL .XX ± 0.15 mm
DASH LINE REPRESENTS LGA110D MODULE OUTLINE.

ABOUT ADVANCED ENERGY

Advanced Energy (AE) has devoted more than three decades to perfecting power for its global customers. AE designs and manufactures highly engineered, precision power conversion, measurement and control solutions for mission-critical applications and processes.

Our products enable customer innovation in complex applications for a wide range of industries including semiconductor equipment, industrial, manufacturing, telecommunications, data center computing, and medical. With deep applications know-how and responsive service and support across the globe, we build collaborative partnerships to meet rapid technological developments, propel growth for our customers, and innovate the future of power.

PRECISION | POWER | PERFORMANCE | TRUST

For international contact information,
visit advancedenergy.com.

powersales@aei.com (Sales Support)
productsupport.ep@aei.com (Technical Support)
+1 888 412 7832

Specifications are subject to change without notice. Not responsible for errors or omissions. ©2023 Advanced Energy Industries, Inc. All rights reserved. Advanced Energy®, and AE® are U.S. trademarks of Advanced Energy Industries, Inc.

ENG-LGA110D-235-03 7.18.23