ARTESYN LGA50D STANDARD PROFILE SERIES

Dual O/P Non-isolated 50 A Digital DC/DC Converter



LGA50D-01DADJJ



LGA50D-01DADJSBJ

Advanced Energy's Artesyn LGA50D is a non-isolated DC-DC converter that is designed for cost and space sensitive applications.
This non-isolated unit offers two independent and configurable 25 amp, 50 watt outputs, which can also be combined to a single configurable 50 amp, 100 watt output.
With a footprint of 1 x 0.5 inches or 25.4 x 12.5 mm.

DATA SHEET

Total Current:

50 A (single)
25 A (dual)

Input Voltage:

7.5 - 14 Vdc

Variable Output:

0.6 - 5.0 V
(standard profile)

SPECIAL FEATURES

- Two-phase design
- Dual or single output configuration possible
- High efficiency up to 95.5%
- Small size 1” x 0.5” x 0.48” (LxWxH)
- No minimum load requirement
- Wide operating temperature range
- Exceptional power density
- Analog or digital control
- Automatic loop compensation
- IPC9592B compliant @ Vin = 12 Vdc
- Tape and reel packaging
- Reflow compatible
- Possible to stack up to 4 for 200 A
- I-mon and T-mon suported
- Two (2) variants supported:
  · Block pin termination
  · Solder bump termination
- Two year shelf life

SAFETY

- Designed to meet IEC62368-1

©2020 Advanced Energy Industries, Inc.

ELECTRICAL SPECIFICATIONS

Input		
Input voltage range	7.5 -14 Vdc (0.6 Vo ≤ Vo ≤ 3.3 Vo) 10 - 14 Vdc (3.3 Vo < Vo ≤ 5.0 Vo) @ 800 KHz	
Max input current	20 A	
Input capacitor (internal)	28.2 µF	
Input capacitor (external) minimum	88 µF (See Note 1, Page 2)	
Input capacitor (external)	208 µF (See Note 1, Page 2)	
Output		
Independent output 1 and 2	Standard profile	
0.6 - 1 V 1.8 V 2.5 V 3.3 V 5.0 V	25 A V 22.5 A 20 A 17.5 A 12 A	
Combined output 1 and 2	Standard profile	
0.6 - 1 V 1.8 V 2.5 V 3.3 V 5.0 V	50 A 45 A 40 A 35 A 24 A	
Efficiency @ Vin=12 V, Freq=571 KHz & Ta=25 °C	Standard profile	
	Min	Nom
1.0 V 1.8 V 2.5 V 3.3 V 5.0 V	87.5% 91% 92.5% 93.5% 94%	88.2% 92.2% 93.7% 94.6% 95.5%
Max output power	120 W	
Output capacitor (external) required	2,200 µF, dual O/P mode Vo1 & Vo2 2,400 µF in single O/P mode (See Note 2, Page 2)	

Control and ambient temperatures	
Operating ambient temperature	-40 °C to +85 °C
Storage temperatures	-40 °C to +125 °C
Switching frequency	JJ&JSBJ: 571 KHz @ 0.6 Vo ≤ Vo ≤ 3.3 Vo 800 KHz @ 3.3 Vo < Vo ≤ 5 Vo

Note 1:
Minimum: 4 x 22 µF/16 V ceramic cap (C2012X6S1C226M125AC or equivalent)
Recommended: 1 x 120 µF/16 V polymer caps (APXS160ARA121MH 70G or equivalent) + 4 x 22 µF/16 V ceramic cap (C2012X6S1C226M125AC or equivalent)
Note 2:
Dual mode (2 outputs): 2 x 680 µF/6.3 V Polymer Tan caps (T530X687M006ATE010 or equivalent) + 8 x 100 µF/6.3 V ceramic caps (GRM32EC80J107ME20L or equivalent) + 4 x 10 µF/10 V ceramic caps (GRM31CR71A106KA01L or equivalent)
Single mode (1 output): 2 x 680 µF/6.3 V Polymer Tan caps (T530X687M006ATE010 or equivalent) + 10 x 100 µF/6.3 V ceramic caps (GRM32EC80J107ME20L or equivalent) + 4 x 10 µF/10 V ceramic caps (GRM31CR71A106KA01L or equivalent)

MODEL NUMBERS

Model Number	Input Voltage	Output Voltage Set Point	Output Current	Efficiency
LGA50D-01DADJJ	7.5 - 14 Vdc	0.6 - 5.0 V	50 A max	See table
LGA50D-01DADJSBJ	7.5 - 14 Vdc	0.6 - 5.0 V	50 A max	See table

ORDERING INFORMATION

Product Family	Rated Output Current	Performance		Input Voltage	Number of Outputs	Output Type	Pin Termination Type	Protection Mode	RoHS Compliance
LGA	50	D	-	01	D	ADJ	Blank, SB	Blank	J
Series Name	Rated output current = 50 A	Digital POL		7.5 - 14.0 V input voltage range	Dual Outputs	Adjustable output	Blank = Standard metal-block SB = Standard solder bump	Blank; Latching	Pb free (RoHS 6/6 compliant)

BLOCK DIAGRAMS

Single Unit, Single O/P Configuration

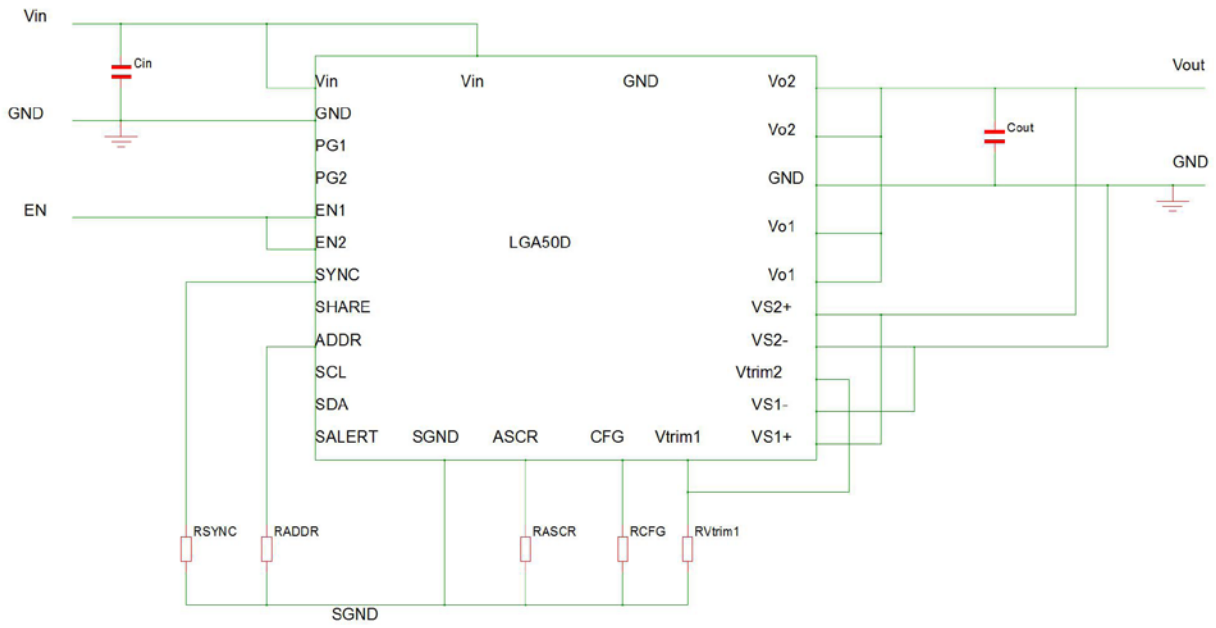

Single Unit, Dual O/P Configuration

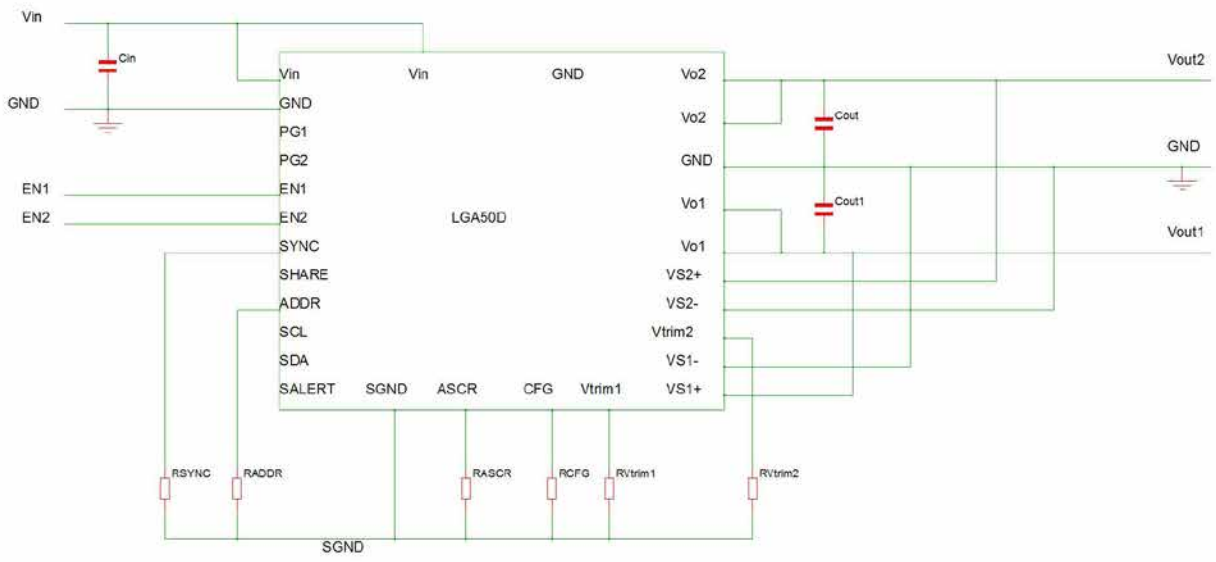

BLOCK DIAGRAMS (CONTINUED)

Two Units, Single O/P Configuration

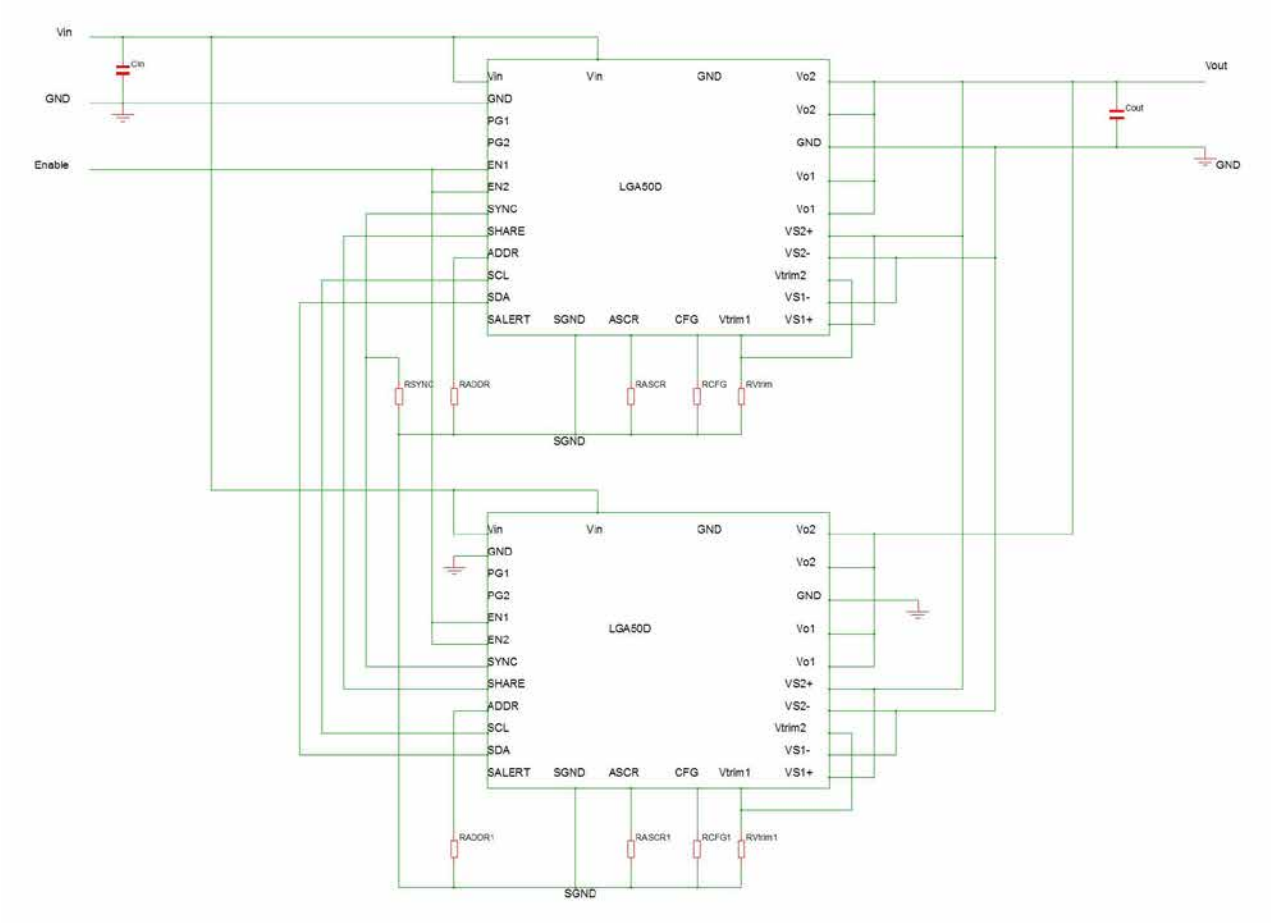

Pin Assignments Single Output			
Pin #	Function	Pin #	Function
1	Vin	15	CFG
2	GND	16	Vtrim1
3	PG1	17	VS1+
4	PG2	18	VS1-
5	EN1	19	Vtrim2
6	EN2	20	VS2-
7	SYNC	21	VS2+
8	SHARE	22	Vo1
9	ADDR	23	Vo1
10	SCL	24	GND
11	SDA	25	Vo2
12	SALERT	26	Vo2
13	SGND	27	GND
14	ASCRCFG	28	Vin

MECHANICAL DRAWINGS

Side view of standard profile metal-block pin termination type (LGA50D-01DADJJ)

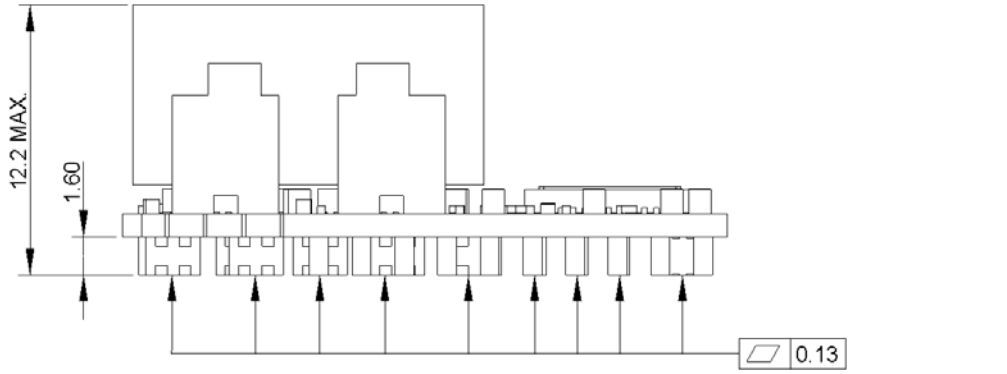

Side view of standard profile solder bump termination type (LGA50D-01DADJSBJ)

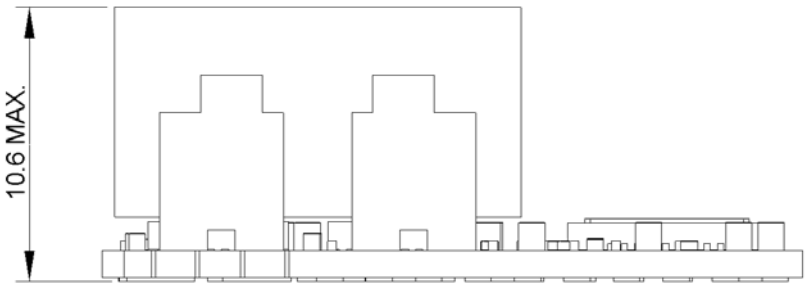

MECHANICAL DRAWINGS (CONTINUED)

For standard metal-block pin termination (LGA50D-01DADJJ)

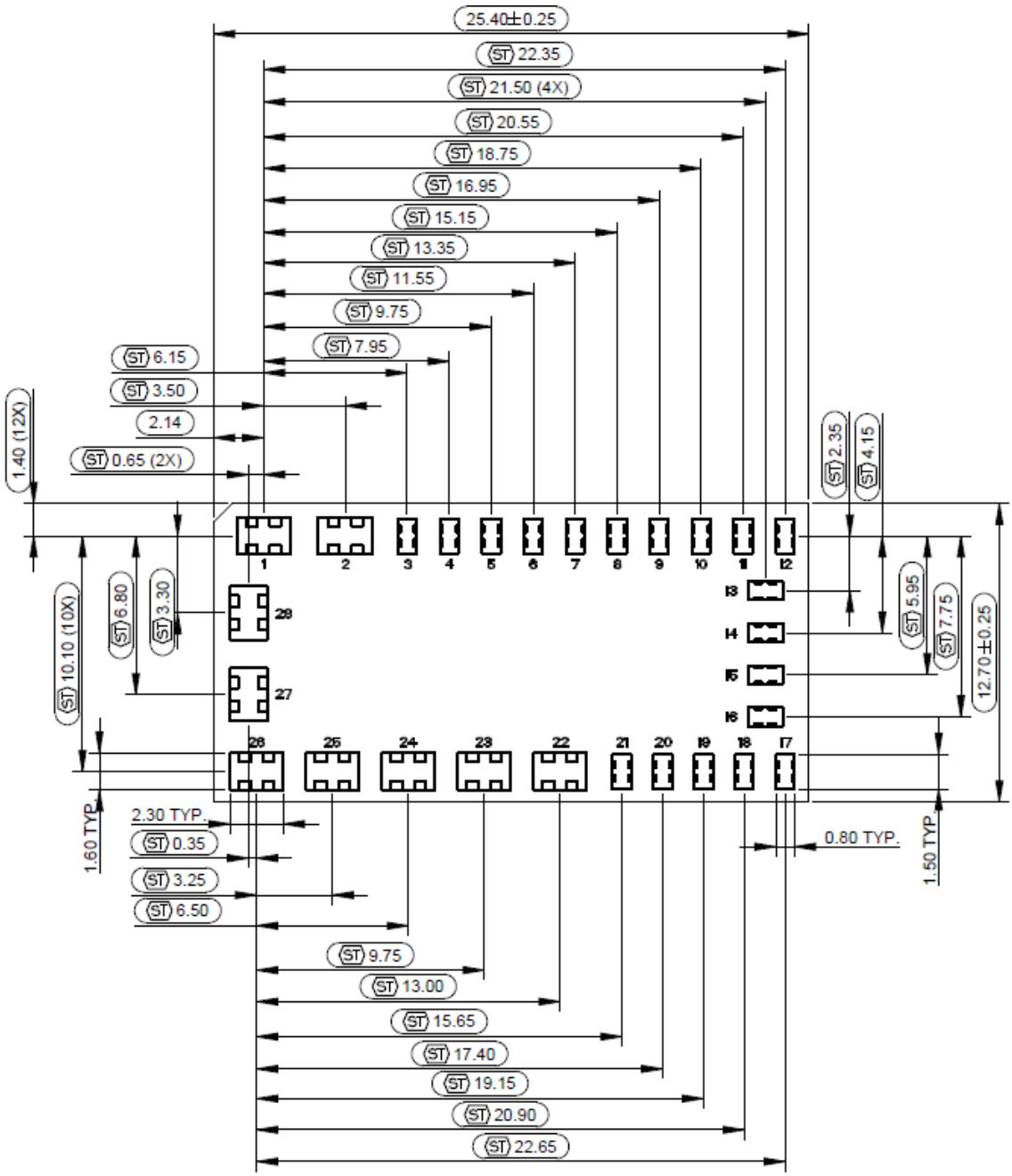

FOOTPRINT DRAWING OF METAL PINS (BOTTOM VIEW)

Dimensions are in millimeters
Tolerances: Decimal .XX ±0.25

MECHANICAL DRAWINGS (CONTINUED)

For standard solder bump termination (LGA50D-01DADJSBJ)

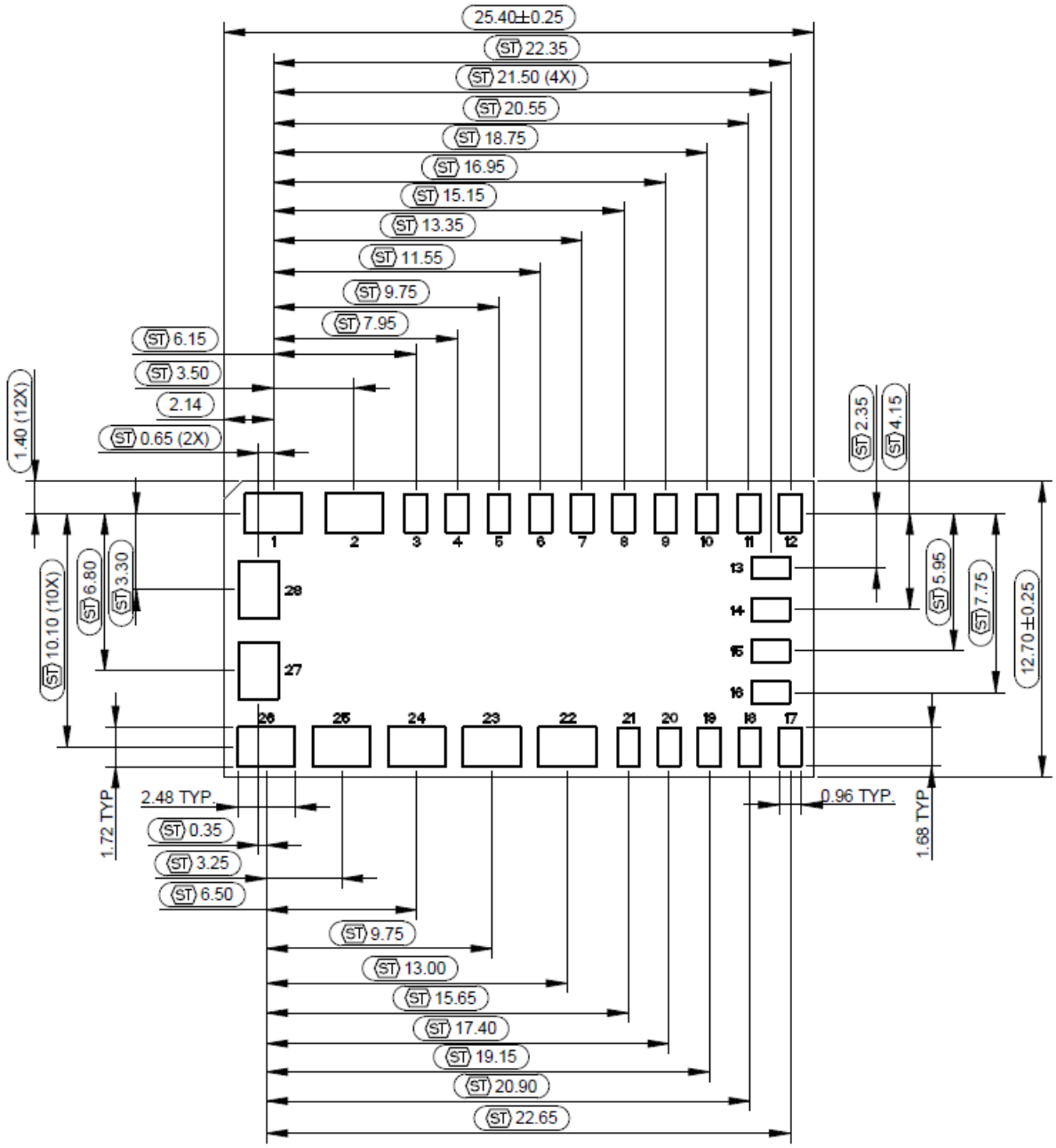

FOOTPRINT DRAWING OF SOLDER BUMP (BOTTOM VIEW)

Dimensions are in millimeters
Tolerances: Decimal .XX ±0.25

MECHANICAL DRAWINGS (CONTINUED)

Proposed solder pad macros (TBC after Artesyn Internal qualification) for standard solder bump termination (LGA50D-01DADJSBJ). It is adopted for standard metal-block pin termination (LGA50D-01DADJJ)

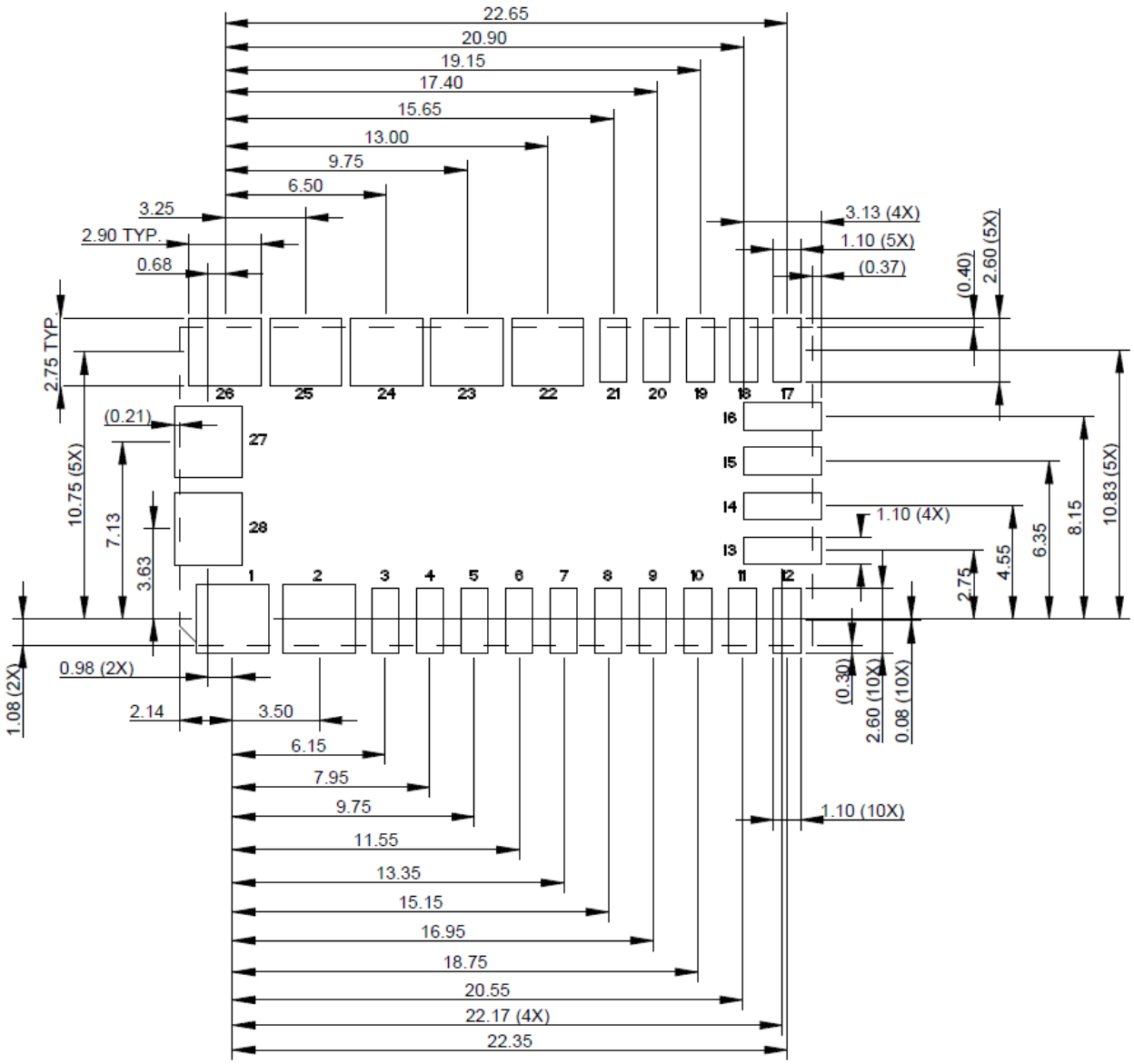

PROPOSED PAD LAYOUT

Dimensions are in millimeters
Tolerances: Decimal .XX ±0.25
Dotted line represents LGA50D module outline

ABOUT ADVANCED ENERGY

Advanced Energy (AE) has devoted more than three decades to perfecting power for its global customers. AE designs and manufactures highly engineered, precision power conversion, measurement and control solutions for mission-critical applications and processes.

Our products enable customer innovation in complex applications for a wide range of industries including semiconductor equipment, industrial, manufacturing, telecommunications, data center computing, and medical. With deep applications know-how and responsive service and support across the globe, we build collaborative partnerships to meet rapid technological developments, propel growth for our customers, and innovate the future of power.

PRECISION | POWER | PERFORMANCE

For international contact information,
visit advancedenergy.com.

powersales@aei.com (Sales Support)
productsupport.ep@aei.com (Technical Support)
+1 888 412 7832

Specifications are subject to change without notice. Not responsible for errors or omissions. ©2020 Advanced Energy Industries, Inc. All rights reserved. Advanced Energy®, AE® and Artesyn™ are U.S. trademarks of Advanced Energy Industries, Inc.

ENG-LGA50D-JJ_JSBJ-235-01 12.28