ARTESYN PTH12010

12 Vin Single Output

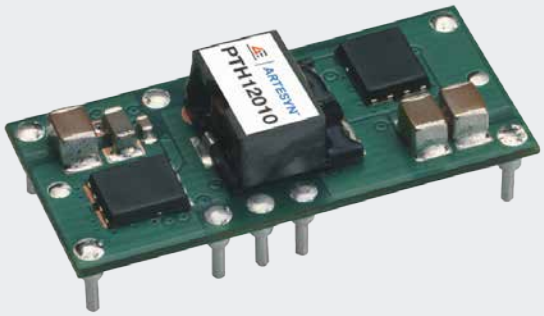

Advanced Energy's Artesyn PTH12010 series of non-isolated DC-DC converters complies with the Point-of-Load Alliance (POLA) standard. The converters offer some of the most advanced POL functions in the industry, including Auto-Track™ sequencing for controlled power-up/power-down of complex semiconductor devices such as DSPs, FPGAs and ASICs, and voltage margining. Standard features include pre-bias startup, input undervoltage lockout, remote sense, remote On/Off and auto resetting short-circuit protection.

There are two models in the PTH12010 series of converters, both of which have an input voltage range of 10.8 to 13.2 Vdc. One model offers an output voltage that can be trimmed from 0.8 to 1.8 Vdc, the other has an output that can be trimmed from 1.2 to 5.5 Vdc, enabling a broad diversity of semiconductor power needs to be satisfied. The 0.8 to 1.8 V output converter offers up to 89% efficiency while the higher output voltage model can achieve up to 94%. Both converters are rated at 66 watts output power and can deliver up to 12 amps. Available in through-hole horizontal mount and surface-mount versions, they have a small 0.62 x 1.37 inch (15.7 x 34.8 mm) footprint and an installed height of just 0.35 inch (9 mm).

DATA SHEET

Total Power:

66 Watts

# of Outputs:

Single

RoHS 6/6 COMPLIANT

*Auto-track is a trademark of Texas Instruments.

SPECIAL FEATURES

- 12 A output current
- 12 V input voltage
- Wide-output voltage adjust:
  1.2 - 5.5 Vdc for suffix 'W'
  0.8 - 1.8 Vdc for suffix 'L'
- Auto-track™ sequencing*
- Margin up/down controls
- Efficiencies up to 94%
- Output ON/OFF inhibit
- Output voltage sense
- Point-of-Load-Alliance (POLA) compatible
- RoHS compliant
- Two year warranty

SAFETY

- UL/cUL CAN/CSA-C22.2 No. 60950-1-03/UL 60950-1, File No. E174104
- TÜV Product Service (EN60950) Certificate No. B 04 06 38572 044
- CB Report and Certificate to IEC60950, Certificate No. US/8292/UL

©2021 Advanced Energy Industries, Inc.

ELECTRICAL SPECIFICATIONS

Input		
Input voltage range	(See Note 3)	10.8 - 13.2 Vdc
Input current	No load	10 mA typical
Remote ON/OFF	(See Note 1)	Positive logic
Start-up time		1 V/ms
Undervoltage lockout		9.0 - 9.5 Vdc typical
Track input voltage	Pin 8 (See Notes 6)	±0.3 Vin
Output		
Voltage adjustability	(See Note 4)	1.2 - 5.5 Vdc (Suffix 'W') 0.8 - 1.8 Vdc (Suffix 'L')
Setpoint accuracy		±2.0% Vo
Line regulation		±10 mV typical
Load regulation		±12 mV typical
Total regulation		±3.0% Vo
Minimum load		0 A
Ripple and noise	20 MHz bandwidth	25 mV pk-pk
Temperature co-efficient	-40 °C to +85 °C	±0.5% Vo
Transient response	(See Note 5)	70 µs recovery time Overshoot/undershoot 100 mV
Margin adjustment		±5.0% Vo

All specifications are typical at nominal input, full load at 25 °C unless otherwise stated.
Cin = 560 µF, Cout = 0 µF.

GENERAL SPECIFICATIONS

Efficiency		See Efficiency Table
Insulation voltage		Non-isolated
Switching frequency	Suffix 'W' Suffix 'L'	300 - 400 kHz 200 - 300 kHz
Approvals and standards		EN60950, UL/cUL60950
Material flammability		UL94V-0
Dimensions	L x W x H	34.80 x 15.75 x 9.00 mm 1.370 x 0.620 x 0.354 in
Weight		5 g (0.18 oz)
MTBF	Telcordia SR-332	7,092,000 hours

EMC CHARACTERISTICS

Electrostatic discharge	EN61000-4-2, IEC801-2
Conducted immunity	EN61000-4-6
Radiated immunity	EN61000-4-3

ENVIRONMENTAL SPECIFICATIONS

Thermal performance (See Note 2)	Operating ambient temperature Non-operating temperature	-40 °C to +85 °C -40 °C to +125 °C
MSL ('Z' suffix only)	JEDEC J-STD-020C	Level 3
Protection		
Short-circuit	Auto reset	20 A typical

ORDERING INFORMATION

Model Number[9]	Output Power (Max.)	Input Voltage	Output Voltage	Output Current (Min.)	Output Current (Max.)	Efficiency (Typical)	Regulation	
							Line	Load
PTH12010L	66 W	10.8 - 13.2 Vdc	0.8 - 1.8 Vdc	0 A	12 A	89%	±10 mV	±12 mV
PTH12010W	66 W	10.8 - 13.2 Vdc	1.2 - 5.5 Vdc	0 A	12 A	94%	±10 mV	±12 mV

PART NUMBER SYSTEM WITH OPTIONS

Product Family	Input Voltage	Output Current	Mechanical Package	Output Voltage Code	Pin Option[8]	Mounting Options	Pin Option
PTH	12	01	0	W	A	S	T
Point-of-Load Alliance compatible	12 = 12 V	01 = 12 A	Always 0	W = Wide L = Low Voltage		D = Horizontal through-hole (RoHS 6/6) Z = Surface-mount solder ball (RoHS 6/6)	No Suffix = Trays T = Tape and Reel[8]

OUTPUT VOLTAGE ADJUSTMENT

The ultra-wide output voltage trim range offers major advantages to users who select the PTH12010. It is no longer necessary to purchase a variety of modules in order to cover different output voltages. The output voltage can be trimmed in a range of 1.2 - 5.5 V for suffix 'W' and 0.8 - 1.8 Vdc for suffix 'L'. When the PTH12010 converter leaves the factory the output has been adjusted to the default voltage of 1.2 V for the PTH12010W and 0.8 V for the PTH12010L.

Efficiency Table: PTH12010W (Io = 8 A)	
Output Voltage	Efficiency
Vo = 5.0 V	94%
Vo = 3.3 V	93%
Vo = 2.5 V	91%
Vo = 2.0 V	90%
Vo = 1.8 V	89%
Vo = 1.5 V	88%
Vo = 1.2 V	86%
Efficiency Table: PTH12010L (Io = 8 A)	
Output Voltage	Efficiency
Vo = 1.8 V	89%
Vo = 1.5 V	88%
Vo = 1.2 V	86%
Vo = 1.0 V	84%
Vo = 0.8 V	82%

Notes:
1. Remote ON/OFF. Positive Logic
   ON: Pin 3 open; or V > Vin - 0.5 V
   OFF: Pin 3 GND; or V < 0.8 V (min - 0.2 V).
2. See Figures 1, 2 and 3 for safe operating curves for the PTH12010W and Figures 6 & 7 for the PTH12010L.
3. A 560 µF electrolytic input capacitor is required for proper operation. The capacitor must be rated for a minimum of 800 mA rms of ripple current.
4. An external output capacitor is not required for basic operation. Adding 330 µF of distributed capacitance at the load will improve the transient response.
5. 1 A/µs load step, 50 to 100% Iomax, Cout = 330 µF.
6. If utilized Vout will track applied voltage by ±0.3 V (up to Vo set point).
7. Tape and reel packaging only available on the surface-mount versions.
8. NOTICE: Some models do not support all options. Please contact your local Artesyn representative or use the on-line model number search tool at http://www.artesyn.com to find a suitable alternative.

PTH12010W CHARACTERISTIC DATA

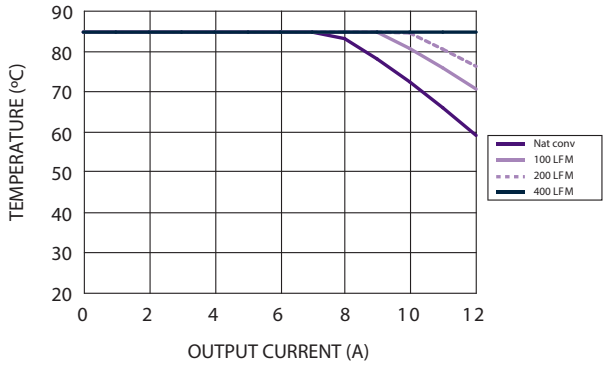

Figure 1 - Safe Operating Area
Vin = 12 V, Output Voltage = 5 V (See Note A)

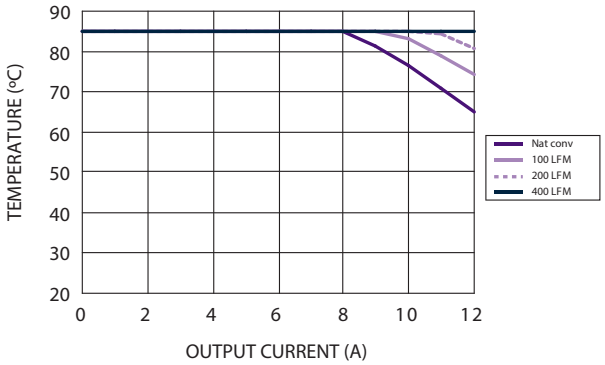

Figure 2 - Safe Operating Area
Vin = 12 V, Output Voltage = 3.3 V (See Note A)

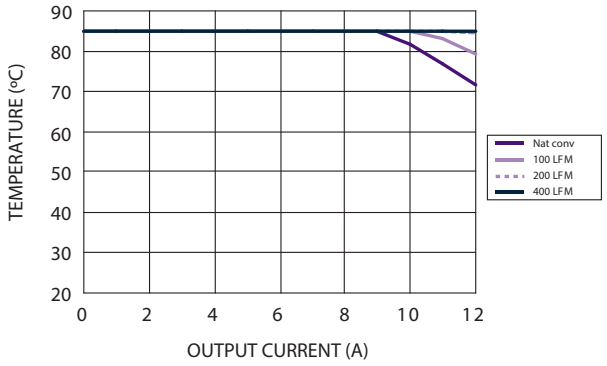

Figure 3 - Safe Operating Area
Vin = 12 V, Output Voltage ≤ 1.8 V (See Note A)

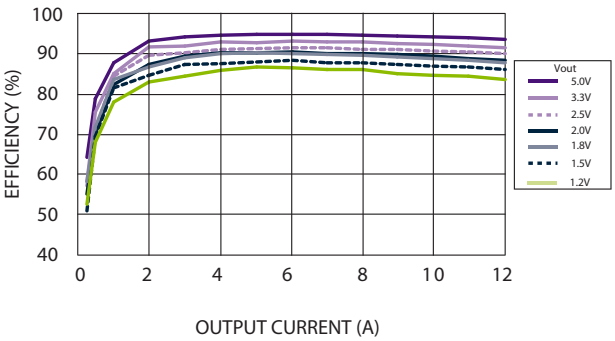

Figure 4 - Efficiency vs Load Current
Vin = 12 V (See Note B)

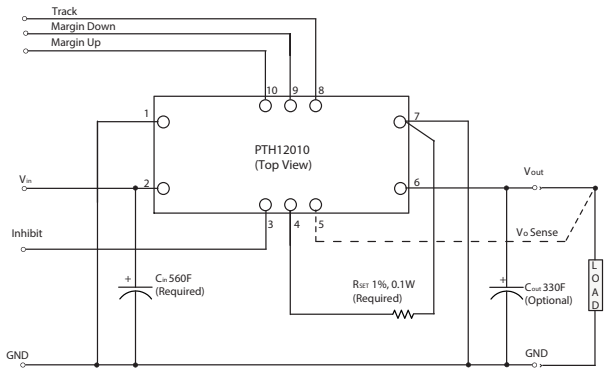

Figure 5 - Standard Application

Notes:
A. SOA curves represent the conditions at which internal components are within the Artesyn derating guidelines.
B. Characteristic data has been developed from actual products tested at 25 °C. This data is considered typical data for the converter.

PTH12010L CHARACTERISTIC DATA

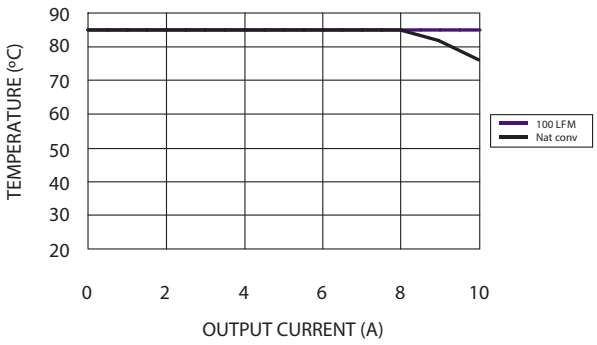

Figure 6 - Safe Operating Area
Vin = 12 V, Output Voltage ≤ 1.8 V (See Note A)

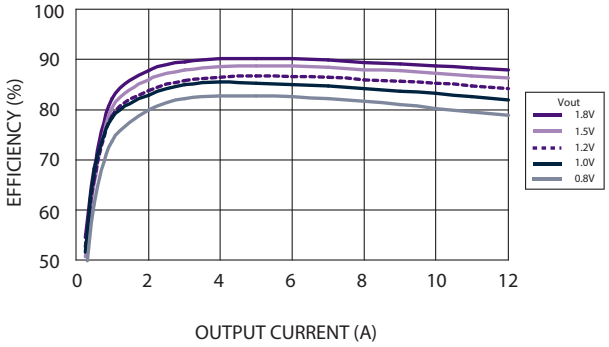

Figure 7 - Efficiency vs Load Current
Vin = 12 V (See Note B)

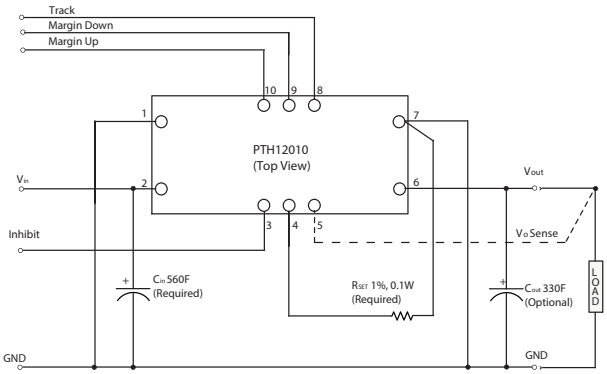

Figure 8 - Standard Application

Notes:
A. SOA curves represent the conditions at which internal components are within the Artesyn derating guidelines.
B. Characteristic data has been developed from actual products tested at 25 °C. This data is considered typical data for the converter.

MECHANICAL DRAWINGS

Plated through-hole

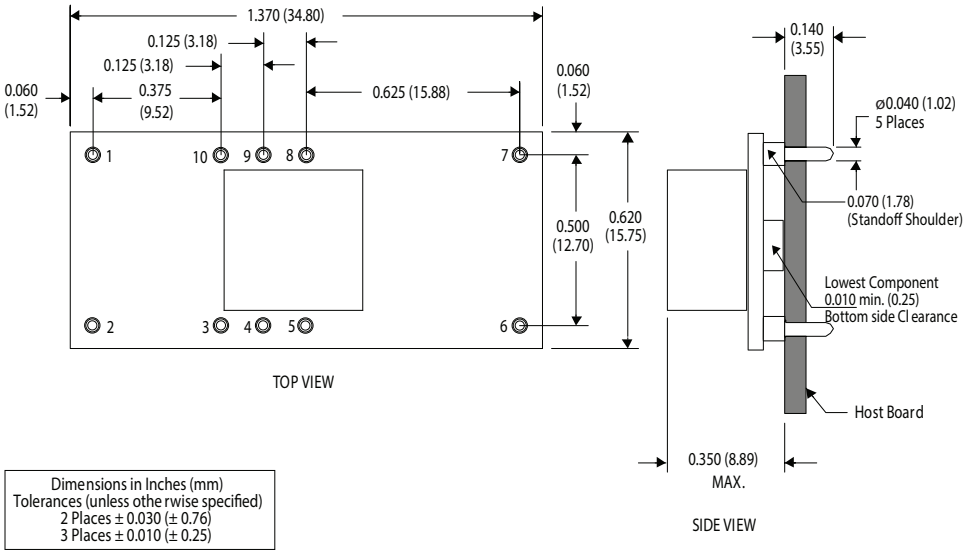

Dimensions in Inches (mm)
Tolerances (unless otherwise specified)
2 Places ± 0.030 (± 0.76)
3 Places ± 0.010 (± 0.25)

Surface-mount

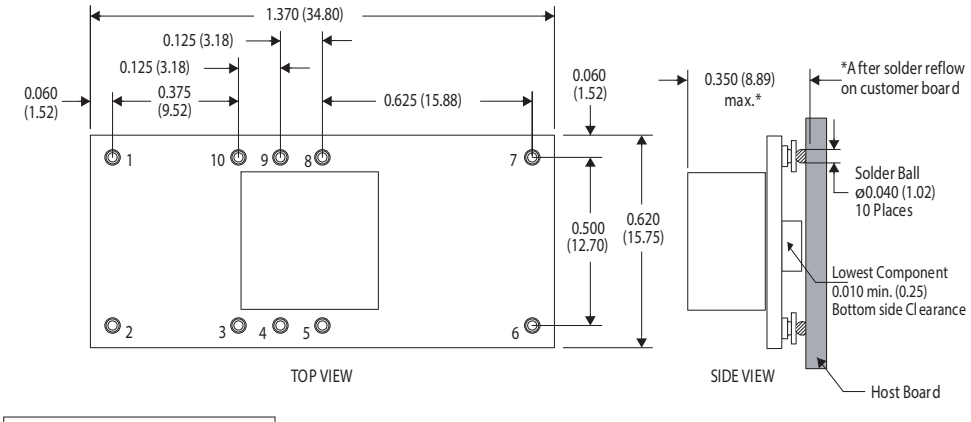

Dimensions in Inches (mm)
Tolerances (unless otherwise specified)
2 Places ± 0.030 (± 0.76)
3 Places ± 0.010 (± 0.25)

Pin Assignments	
Pin	Function
1	Ground
2	Vin
3	Inhibit*
4	Vo adjust
5	Vo sense
6	Vout
7	Ground
8	Track
9	Margin down*
10	Margin up*
*Denotes negative logic: Open = Normal operation Ground = Function active	

ABOUT ADVANCED ENERGY

Advanced Energy (AE) has devoted more than three decades to perfecting power for its global customers. AE designs and manufactures highly engineered, precision power conversion, measurement and control solutions for mission-critical applications and processes.

Our products enable customer innovation in complex applications for a wide range of industries including semiconductor equipment, industrial, manufacturing, telecommunications, data center computing, and medical. With deep applications know-how and responsive service and support across the globe, we build collaborative partnerships to meet rapid technological developments, propel growth for our customers, and innovate the future of power.

PRECISION | POWER | PERFORMANCE

For international contact information,
visit advancedenergy.com.

powersales@aei.com (Sales Support)
productsupport.ep@aei.com (Technical Support)
+1 888 412 7832

Specifications are subject to change without notice. Not responsible for errors or omissions. ©2021 Advanced Energy Industries, Inc. All rights reserved. Advanced Energy®, AE® and Artesyn™ are U.S. trademarks of Advanced Energy Industries, Inc.

ENG-PTH12010-235-01 1.13