ARTESYN PTH12040

12 Vin Single Output

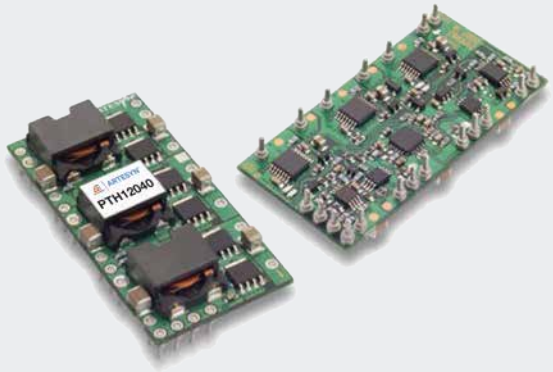

Advanced Energy's Artesyn PTH12040 series non-isolated DC-DC converter complies with the Point-of-Load Alliance (POLA) standard. It offers some of the most advanced POL functions in the industry, including Auto-Track™ sequencing for controlled power-up/power-down of complex semiconductor devices such as DSPs, FPGAs and ASICs, and voltage margining. Standard features include pre-bias startup, programmable input undervoltage lockout, differential remote sense, remote On/Off and auto resetting short-circuit protection.

PTH12040 series converters have an input voltage range of 8 to 14Vdc and an output voltage that can be trimmed from 0.8 to 5.5 Vdc to meet a wide variety of semiconductor power needs. Rated at 275 watts, the converters offer up to 93% efficiency and can deliver up to 50 amps. Available in through-hole horizontal mount and surface-mount versions, they have a small 1 x 2 inch (26.5 x 52 mm) footprint and an installed height of just 0.35 inch (9 mm).

DATA SHEET

Total Power:

275 Watts

# of Outputs:

Single

RoHS 6/6 COMPLIANT

*Auto-track is a trademark of Texas Instruments.

SPECIAL FEATURES

- 50 A output current
- 12 V input voltage (8 - 14 Vdc)
- Wide-output voltage adjust: 0.8 - 5.5 Vdc
- Auto-track™ sequencing*
- Margin up/down controls
- Efficiencies up to 96%
- Output ON/OFF inhibit
- Differential remote sense
- Programmable UnderVoltage Lockout (UVLO)
- Point-of-Load-Alliance (POLA) compatible
- RoHS compliant
- Two year warranty

SAFETY

- UL/cUL CAN/CSA-C22.2 No. 60950-1-03/UL 60950-1, File No. E174104
- TÜV Product Service (EN60950) Certificate No B 04 06 38572 044
- CB Report and Certificate to IEC60950, Certificate No. US/8292/UL

©2021 Advanced Energy Industries, Inc.

ELECTRICAL SPECIFICATIONS

Input		
Input voltage range	(See Note 3)	8 - 14Vdc
Input current	(See Note 2)	35 mA typical
Remote ON/OFF	(See Note 1)	Positive logic
Start-up time		1 V/ms
Undervoltage lockout	(See Note 8)	6.6 - 7.5 V typical
Track input voltage	Pin 18 (See Note 7)	-0.13 mA
Output		
Voltage adjustability		0.8 - 5.5 Vdc
Setpoint accuracy	(See Note 1)	±2.0% Vo
Line regulation		±5 mV typical
Load regulation		±5 mV typical
Total regulation	(See Note 1)	±3.0% Vo
Minimum load		0 A
Ripple and noise	20 MHz bandwidth	15 mV typical
Transient response	(See Note 4)	70 µs recovery time Overshoot/undershoot 150 mV
Margin adjustment	(See Note 7)	±5.0% Vo

All specifications are typical at nominal input, full load at 25 °C unless otherwise stated.
Cin = 1000 µF, Cout = 660 µF.

GENERAL SPECIFICATIONS

Efficiency		See Efficiency Table
Insulation voltage		Non-isolated
Switching frequency		1.05 MHz
Approvals and standards		EN60950, UL/cUL60950
Material flammability		UL94V-0
Dimensions	L x W x H	51.94 x 26.54 x 9.07 mm 2.045 x 1.045 x 0.357 in
Weight		17 g (0.60 oz)
MTBF	Telcordia SR-332	2,500,000 hours

EMC CHARACTERISTICS

Electrostatic discharge	EN61000-4-2, IEC801-2
Conducted immunity	EN61000-4-6
Radiated immunity	EN61000-4-3

ENVIRONMENTAL SPECIFICATIONS

Thermal performance (See Note 2)	Operating ambient temperature Non-operating temperature	-40 °C to +85 °C -40 °C to +125 °C
MSL ('Z' suffix only)	JEDEC J-STD-020C	Level 3
Protection		
Short-circuit	Auto reset	95 A typical
Thermal		Auto recovery

ORDERING INFORMATION

Model Number[9]	Output Power (Max.)	Input Voltage	Output Voltage	Output Current (Min.)	Output Current (Max.)	Efficiency (Typical)	Regulation	
							Line	Load
PTH12030W	275 W	8 - 14 Vdc	0.8 - 5.5 Vdc	0 A	50 A	96%	±5 mV	±5 mV

PART NUMBER SYSTEM WITH OPTIONS

Product Family	Input Voltage	Output Current	Mechanical Package	Output Voltage Code	Pin Option[8]	Mounting Options
PTH	**12**	**04**	**0**	**W**	**A**	**S**
Point-of-Load Alliance compatible	12 = 12 V	04 = 50 A	Always 0	W = Wide		D = Horizontal through-hole (RoHS 6/6) Z = Surface-mount solder ball (RoHS 6/6)

OUTPUT VOLTAGE ADJUSTMENT

The ultra-wide output voltage trim range offers major advantages to users who select the PTH12040W. It is no longer necessary to purchase a variety of modules in order to cover different output voltages. The output voltage can be trimmed in a range of 0.8 Vdc to 1.8 Vdc. When the PTH12040W converter leaves the factory the output has been adjusted to the default voltage of 0.8 V.

Efficiency Table: PTH12040W (Io = 35 A)	
Output Voltage	Efficiency
Vo = 5.0 V	96%
Vo = 3.3 V	95%
Vo = 2.5 V	93%
Vo = 2.0 V	92%
Vo = 1.8 V	91%
Vo = 1.5 V	90%
Vo = 1.2 V	88%
Vo = 1.0 V	86%
Vo = 0.8 V	82%

Notes:
1. The set-point voltage tolerance is affected by the tolerance and stability of RSET. The stated limit is unconditionally met if RSET has a tolerance of 1% with 100 ppm/˚C or better temperature stability.
2. This control pin has an internal pull-up to 5 V nominal. If it is left open-circuit the module will operate when input power is applied. A small low leakage (<100 nA) MOSFET is recommended for control. For further information, consult the related application note. For further information, consult Application Note 193.
3. A 1000 µF input capacitor is required for proper operation. The capacitor must be rated for a minimum of 300 mA rms of ripple current.
4. This is with a 1 A/µs loadstep, 50 to 100% Iomax, Io = 680 µF.
5. See Figures 1 and 2 for safe operating curves.
6. When the set-point voltage is adjusted higher than 3.6 V, a 10 V minimum input voltage is recommended.
7. A small low-leakage (<100 nA) MOSFET is recommended to control this pin. The open circuit voltage is less than 1 Vdc.
8. These are the default voltages. They may be adjusted using the 'UVLO Prog' control input. Consult Application Note No. 193 for further information.
9. NOTICE: Some models do not support all options. Please contact your local Artesyn representative or use the on-line model number search tool at http://www.artesyn.com to find a suitable alternative.

CHARACTERISTIC DATA

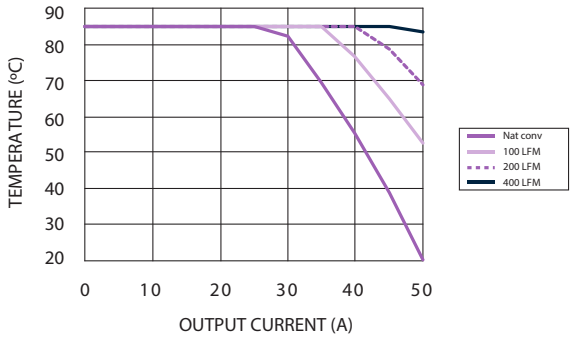

Figure 1 - Safe Operating Area
Vin = 12 V, Output Voltage = 3.3 V (See Note A)

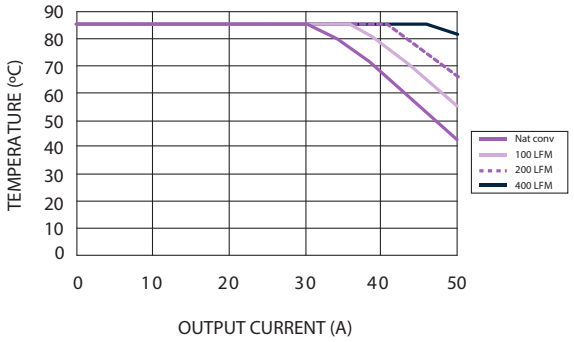

Figure 2 - Safe Operating Area
Vin = 12 V, Output Voltage = 1.2 V (See Note A)

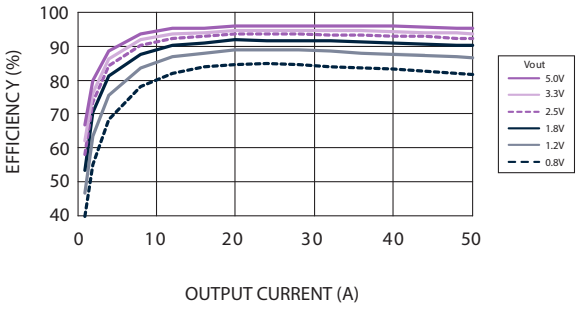

Figure 3 - Efficiency vs Load Current
Vin = 12 V (See Note B)

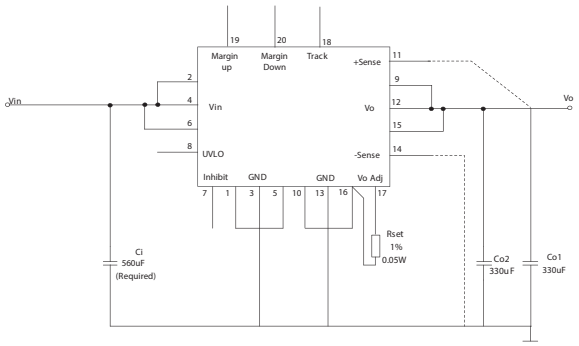

Figure 4 - Standard Application

Notes:
A. SOA curves represent the conditions at which internal components are within the Artesyn derating guidelines.
B. Characteristic data has been developed from actual products tested at 25 °C. This data is considered typical data for the converter.

MECHANICAL DRAWINGS

Plated through-hole

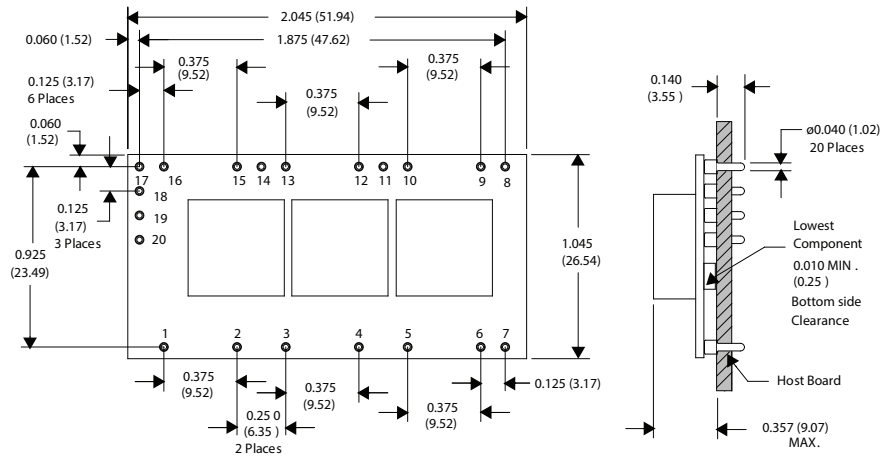

Dimensions in Inches (mm)
Tolerances (unless otherwise specified)
2 Places 0.030 (0.76)
3 Places 0.010 (0.25)

Surface-mount

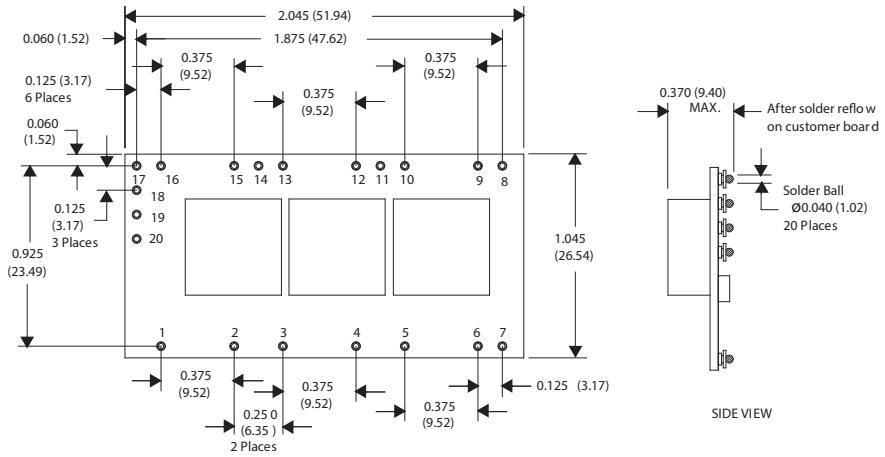

Dimensions in Inches (mm)
Tolerances (unless otherwise specified)
2 Places 0.030 (0.76)
3 Places 0.010 (0.25)

Pin Assignments	
Pin	Function
1	Ground
2	Vin
3	Ground
4	Vin
5	Ground
6	Vin
7	Inhibit*
8	UVLO Programming
9	Vout
10	Ground
11	Vs+
12	Vout
13	Ground
14	Vs-
15	Vout
16	Ground
17	Adjust
18	Track
19	Margin up*
20	Margin down*
*Denotes negative logic: Open = Normal operation Ground = Function active	

ABOUT ADVANCED ENERGY

Advanced Energy (AE) has devoted more than three decades to perfecting power for its global customers. AE designs and manufactures highly engineered, precision power conversion, measurement and control solutions for mission-critical applications and processes.

Our products enable customer innovation in complex applications for a wide range of industries including semiconductor equipment, industrial, manufacturing, telecommunications, data center computing, and medical. With deep applications know-how and responsive service and support across the globe, we build collaborative partnerships to meet rapid technological developments, propel growth for our customers, and innovate the future of power.

PRECISION | POWER | PERFORMANCE

For international contact information,
visit advancedenergy.com.

powersales@aei.com (Sales Support)
productsupport.ep@aei.com (Technical Support)
+1 888 412 7832

Specifications are subject to change without notice. Not responsible for errors or omissions. ©2021 Advanced Energy Industries, Inc. All rights reserved. Advanced Energy®, AE® and Artesyn™ are U.S. trademarks of Advanced Energy Industries, Inc.

ENG-PTH12040-235-01 1.13