PTV05020

5 Vin single output

DC-DC CONVERTERS | POLA Non-isolated | 1

NEW Product

- **18 A output current**
- **5 V input voltage**
- **Wide-output voltage adjust (0.8 Vdc to 3.6 Vdc)**
- **Auto-track™ sequencing***
- **Pre-bias start-up**
- **Efficiencies up to 96%**
- **Output ON/OFF inhibit**
- **Output voltage sense**
- **Vertical through-hole mounting**
- **Point-of-Load-Alliance (POLA) compatible**
- **Undervoltage lockout**
- **Available RoHS compliant**

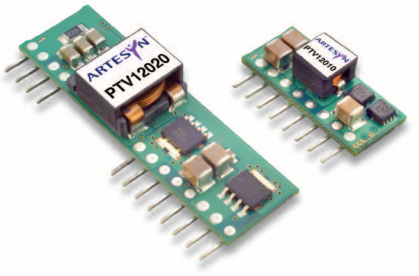

The PTV05020 is a non-isolated dc-dc converter from Artesyn under the Point of Load Alliance (POLA) standard. The vertical mounting option of the PTV05020 module provides performance in less than 20% of the space that is required by alternative solutions. The Auto-Track™ feature provides for sequencing between multiple modules, a function, which is becoming a necessity for powering advanced silicon including DSP's, FPGA's and ASIC's requiring controlled power-up and power-down. The PTV05020 has an input voltage of 4.5 Vdc to 5.5 Vdc and offers a wide 0.8 Vdc to 3.6 Vdc output voltage range with up to 18 A output current, which allows for maximum design flexibility and a pathway for future upgrades.

2 YEAR WARRANTY

All specifications are typical at nominal input, full load at 25 °C Vo = 3.3 V unless otherwise stated C_{in} = 680 µF and 22 µF(Ceramic), C_{out} = 0 µF

SPECIFICATIONS

OUTPUT SPECIFICATIONS

Voltage adjustability	(See Note 4)	0.8-3.6 Vdc
Setpoint accuracy	(See Note 4)	±2.0% Vo
Line regulation		±5 mV typ.
Load regulation		±5 mV typ.
Total regulation	(See Note 4)	±3.0% Vo
Minimum load		0 A
Ripple and noise	20 MHz bandwidth	20 mV pk-pk
Temperature co-efficient	-40 ºC to +85 ºC	±0.5% Vo
Transient response (See Note 5)		70 µs recovery time Overshoot/undershoot 120 mV

INPUT SPECIFICATIONS

Input voltage range	(See Note 3)	4.5-5.5 Vdc
Input standby current		10 mA typ.
Remote ON/OFF	(See Note 1)	Positive logic
Undervoltage lockout	Increasing	4.3 V typ
Track input current	Pin 9 (See Note 6, 7)	-0.13 mA

GENERAL SPECIFICATIONS

Efficiency	(See Efficiency Table)	96% max.
Insulation voltage		Non-isolated
Switching frequency	250-340 kHz	300 kHz typ.
Approvals and standards		EN60950 UL/cUL60950
Material flammability		UL94V-0
Dimensions	(L x W x H)	44.45 x 9.39 x 12.70 mm 1.75 x 0.37 x 0.50 in
Weight		5.5 g (0.19 oz)
MTBF	Telcordia SR-332	5,000,000 hours

ENVIRONMENTAL SPECIFICATIONS

Thermal performance (See Note 2)	Operating ambient, temperature	-40 ºC to +85 ºC
	Non-operating	-40 ºC to +125 ºC

PROTECTION

Overcurrent	Auto reset	35 A typ.
Overtemperature		Auto recovery

International Safety Standard Approvals

UL/cUL CAN/CSA-C22.2 No. 60950
File No. E174104

TÜV Product Service (EN60950) Certificate No. B 04 06 38572 044
CB Report and Certificate to IEC60950, Certificate No. US/8292/UL

*Auto-track™ is a trade mark of Texas Instruments

PTV05020

5 Vin single output

Point-of-Load Alliance

ARTESYN TECHNOLOGIES

For the most current data and application support visit www.artesyn.com/powergroup/products.htm

NEW Product

OUTPUT POWER (MAX.)	INPUT VOLTAGE	OUTPUT VOLTAGE	OUTPUT CURRENT (MIN.) (2)	OUTPUT CURRENT (MAX.)	EFFICIENCY (MAX.)	REGULATION		MODEL NUMBER (9,10)
						LINE	LOAD	
64.8 W	4.5-5.5 Vdc	0.8-3.6 Vdc	0 A	18 A	96%	±5 mV	±5 mV	PTV05020W

Part Number System with Options

P T V 0 5 0 2 0 W A H

Product Family
Point of Load Alliance Compatible

Mounting Version
V = Vertical

Input Voltage
05 = 5 V

Output Current
02 = 18 A

Mechanical Package
Always 0

Mounting Style (9)
D = Horizontal Through-Hole (Matte Sn)
H = Horizontal Through-Hole (Sn/Pb)

Pin Style
A = Through-Hole Std. Pin Length (0.140")

Output Voltage Code
W = Wide

Output Voltage Adjustment of the PTV05020 Series

The ultra-wide output voltage trim range offers major advantages to users who select the PTV05020. It is no longer necessary to purchase a variety of modules in order to cover different output voltages. The output voltage can be trimmed in a range of 0.8 Vdc to 3.6 Vdc. When the PTV05020 converter leaves the factory the output has been adjusted to the default voltage of 0.8 V

Notes

1. Remote ON/OFF. Positive logic
   ON: Pin 3 open; or V > Vin - 0.5 V
   OFF: Pin 3 GND; or V < 0.6 V
2. See Figure 1 for safe operating curve.
3. A 680 µF electrolytic input capacitor is required for proper operation as well as a 22 µF high-frequency ceramic capacitor. The electrolytic capacitor must be rated for a minimum of 750 mA rms of ripple current.
4. An external output capacitor is not required for basic operation. Adding 330 µF of distributed capacitance at the load will improve the transient response.
5. 1 A/µs load step, 50 to 100% I_{omax}, C3 = 330 µF.
6. If utilized Vout will track applied voltage by ±0.3 V (up to Vo set point).
7. The pre-bias start-up feature is not compatible with Auto-Track™. This is because when the module is under Auto-Track™ control, it is fully active and will sink current if the output voltage is below that of a back-feeding source. Therefore to ensure a pre-bias hold-off, one of the following two techniques must be followed when input power is first applied to the module. The Auto-Track™ function must either be disabled, or the module's output held off using the Inhibit pin. Refer to Application Note 198 for more details.
8. The set-point voltage tolerance is affected by the tolerance and stability of R_{set}. The stated limit is unconditionally met if R_{set} has a tolerance of 1% with 100/ºC or better temperature stability.
9. To order Pb-free (RoHS compatible) through-hole parts replace the mounting option 'H' with 'D', e.g. PTV05020WAD.
10. NOTICE: Some models do not support all options. Please contact your local Artesyn representative or use the on-line model number search tool at http://www.artesyn.com/powergroup/products.htm to find a suitable alternative.

EFFICIENCY TABLE ($I_O = I_{OMAX}$)	
OUTPUT VOLTAGE	EFFICIENCY
Vo = 3.3 V	94%
Vo = 2.5 V	93%
Vo = 1.8 V	90%
Vo = 1.5 V	89%
Vo = 1.2 V	87%
Vo = 1.0 V	85%

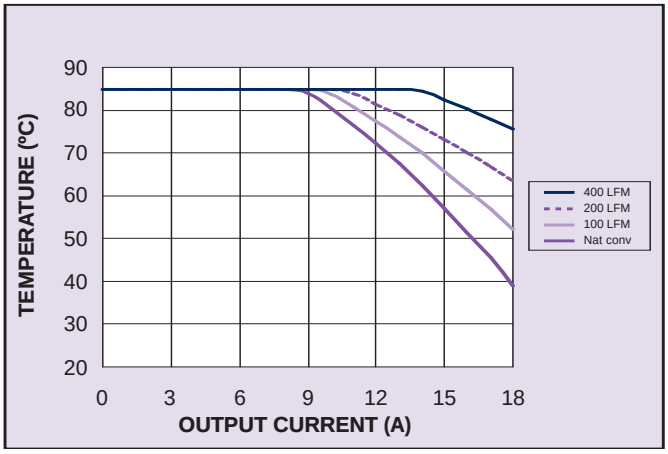

Figure 1 - Safe Operating Area
Vin = 5 V, Output Voltage = 3.3 V (See Note A)

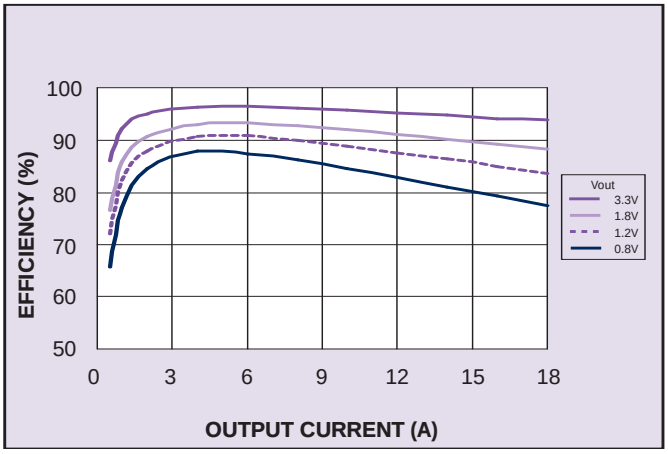

Figure 2 - Efficiency vs Load Current
Vin = 5 V (See Note B)

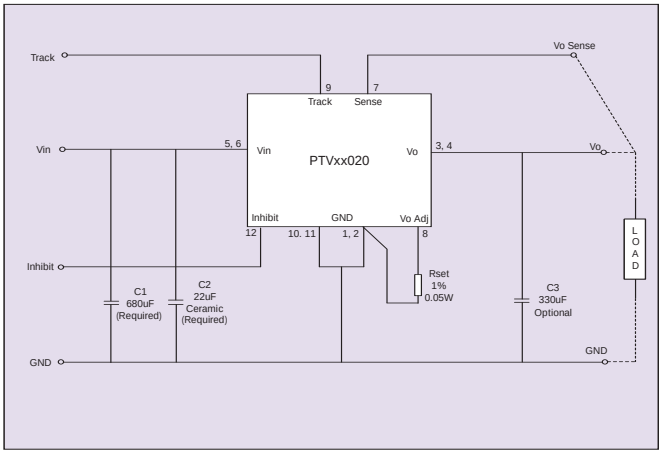

Figure 3 - Standard Application

Notes

A SOA curves represent the conditions at which internal components are within the Artesyn derating guidelines.

B Characteristic data has been developed from actual products tested at 25 °C. This data is considered typical data for the converter.

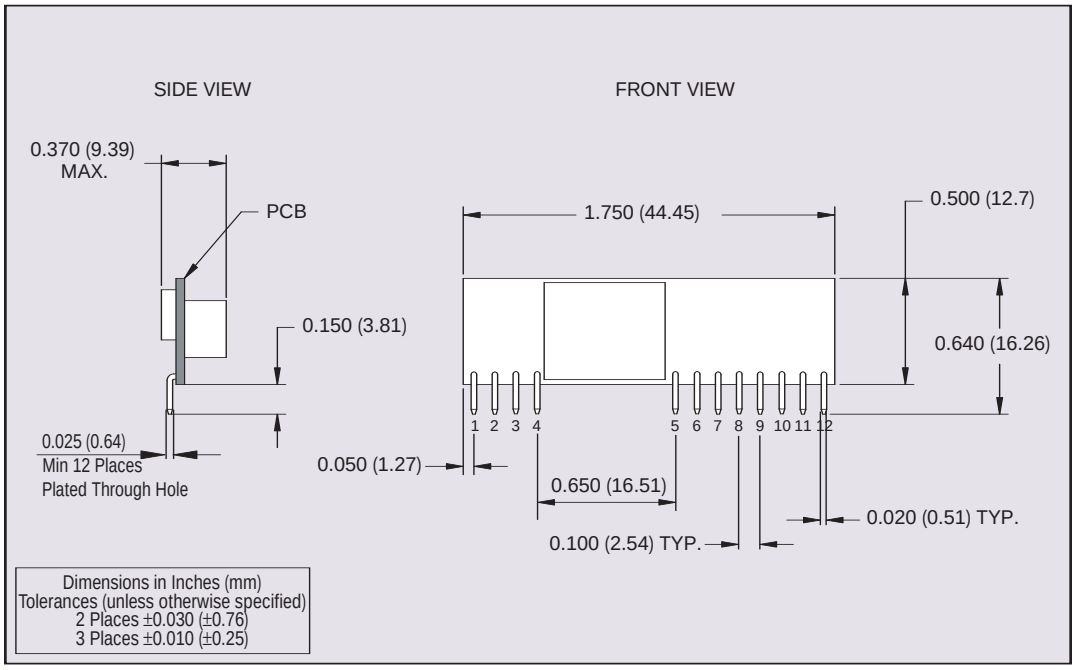

PIN CONNECTIONS	
PIN NO.	FUNCTION
1	Ground
2	Ground
3	Vout
4	Vout
5	Vin
6	Vin
7	Vo Sense
8	Vo Adjust
9	Track
10	Ground
11	Ground
12	Inhibit

Figure 4 - Mechanical Drawing and Pinout Table

Datasheet © Artesyn Technologies® 2005
The information and specifications contained in this datasheet are believed to be correct at time of publication. However, Artesyn Technologies accepts no responsibility for consequences arising from printing errors or inaccuracies. The information and specifications contained or described herein are subject to change in any manner at any time without notice. No rights under any patent accompany the sale of any such product(s) or information contained herein.