# ARTESYN SIL/SMT20C2 SERIES

C-Class Non-Isolated




Advanced Energy's Artesyn SMT20C2 series surface mount 20 amp non-isolated DC-DC converter is designed for cost- and space-sensitive applications. It accepts a wide range 4.5 to 13.8 Vdc input and provides an output that is adjustable from 0.59 to 5.1 Vdc to accommodate a wide variety of silicon power needs. Rated at 100 watts, the converter has a typical efficiency of 93%. Standard features include remote sense, remote On/Off and remote 'power good' indication.

DATA SHEET

**Total Power:**

20 Amps

**Input Voltage:**

4.5 - 13.8 Vdc

**# of Outputs:**

Single

RoHS 6/6 COMPLIANT

## SPECIAL FEATURES

- 20 A current rating
- Input voltage range: 4.5 - 13.8 Vdc
- Output voltage: 0.59 - 5.1 V
- Industry-leading value
- Cost optimized design
- Excellent transient response
- Output enable
- Output voltage adjustability
- Path for future upgrades
- Supports silicon voltage migration
- Reduced design-in and qual time
- Current sink capability
- RoHS compliant
- Two year warranty

## SAFETY

- UL, cUL CAN/CSA 22.2 No.
- TÜV Product Service (EN60950)
- CB report and certificate to IEC60950

©2020 Advanced Energy Industries, Inc.

## ELECTRICAL SPECIFICATIONS

| | | |
|---|---|---|
| **Input** | | |
| Input voltage range | | 4.5 - 13.8 Vdc |
| Input current | Minimum load<br>Remote OFF | 50 mA<br>5 mA |
| Input current (max.) | See Note 3 | 18 A @ Io max. |
| Start-up time | Remote ON/OFF | 3 ms |
| **Output** | | |
| Output voltage | See Note 5 | 0.59 - 5.1 V |
| Output setpoint accuracy | 0.1% trim resistors | ±1.0% |
| Line regulation | Low line to high line | ±0.2% |
| Load regulation | Full load to min. load | ±0.5% |
| Min./max. load | | 0 A/20 A |
| Overshoot | At turn-on | 0.5% max. |
| Undershoot | At turn-off | 100 mV max. |
| Ripple and noise<br>5 Hz to 20 MHz | See Note 1 | 30 mV<br>Vin = 5 V, Vout = 2.5 V |
| Transient response | See Note 1, 2 | 130 mV max. deviation; 50 µs recovery to within regulation band |
| **General** | | |
| Efficiency | Vin = 5 V, Vo = 2.5 V, Io = 20 A | 90% |
| Switching frequency | Fixed | 750 kHz |
| Material flammability | | UL94V-0 |
| Approvals and standards | | EN60950; UL/cUL6950 |
| Weight | | 8.50 g (0.03 oz.) |
| MTBF | 12 V @ 40 °C, 100% load<br>Bellcore 332 | 6,721,853 hours |
| Coplanarity | | 150 µm |

All specifications are typical at nominal input, full load at 25 °C, unless otherwise stated.

## ENVIRONMENTAL SPECIFICATIONS

| | | |
|---|---|---|
| Thermal performance | Operating ambient temperature | -0 °C to +70 °C |
| See Note 5 | Non-operating temperature | -40 °C to +125 °C |
| Protection | | |
| Short-circuit | Hiccup, non-latching | |
| Overvoltage protection | Hiccup, non-latching | |
| Recommended System Capacitance | | |
| Input | See Note 6 | 0 µF |
| Output | See Note 7 | 0 µF |

## ORDERING INFORMATION

| Model Number [8] | Output Power (Max.) | Input Voltage | Mount | Output Voltage | Output Current (Min.) | Output Current (Max.) | Efficiency (Typical) | Regulation | |
|---|---|---|---|---|---|---|---|---|---|
| | | | | | | | | Line | Load |
| SIL20C2-00SADJ-HJ | 100 W | 4.5 - 13.8 Vdc | Horizontal | 0.59 - 5.1 V | 0 A | 20 A | 93% | ±0.2% | ±0.5% |
| SIL20C2-00SADJ-VJ | 100 W | 4.5 - 13.8 Vdc | Vertical | 0.59 - 5.1 V | 0 A | 20 A | 93% | ±0.2% | ±0.5% |
| SMT20C2-00SADJJ | 100 W | 4.5 - 13.8 Vdc | Horizontal Surface Mount | 0.59 - 5.1 V | 0 A | 20 A | 93% | ±0.2% | ±0.5% |

## PART NUMBER SYSTEM WITH OPTIONS

| Product Family | Rated Output Current | Performance | Generation | | Input Voltage | Output Voltage | | Mounting Option | RoHS Compliance |
|---|---|---|---|---|---|---|---|---|---|
| SXX | 20 | C | 2 | - | 00 | SADJ | - | V | J |
| SIL = Single In Line<br>SMT = Surface Mount | 06 = 6 Amp<br>15 = 15 Amp<br>20 = 20 Amp<br>30 = 30 Amp<br>40 = 40 Amp | C = Cost Optimized | Blank = Standard<br>2 = Increased current density | | 00 = 4.5 - 13.8 V | Single Adjustable Output | | V = Vertical<br>H = Horizontal<br>Blank = Horizontal Surface Mount | J = Pb free (RoHS 6/6 compliant) |

## OUTPUT VOLTAGE ADJUSTMENT

The ultra-wide output voltage trim range offers major advantages to users who select the SIL/SMT40C2 series. It is no longer necessary to purchase a variety of modules in order to cover different output voltages. The output voltage can be trimmed in a range of 0.59 - 5.1 V. When the SIL20C2 converter leaves the factory, the output has been adjusted to the default voltage of 0.59 V.

Notes:
1. Measured as per recommended system capacitance.
2. di/dt = 10 A/µs, Vin = Nom, Tc = 25 °C, load change = 0.75 Io to full Io and full Io to 0.75.
3. External input fusing is recommended.
4. Additional part numbers may be available with different output voltages.
5. Airflow dependent, 100 LFM minimum required.
6. No capacitors needed for ripple current stability.
7. No capacitors needed for stability.
8. NOTICE: Some models do not support all options. Please contact your local Artesyn Embedded Power representative or use the on-line model number search tool at http://www.artesyn.com to find a suitable alternative.

## STANDARD APPLICATION DRAWING

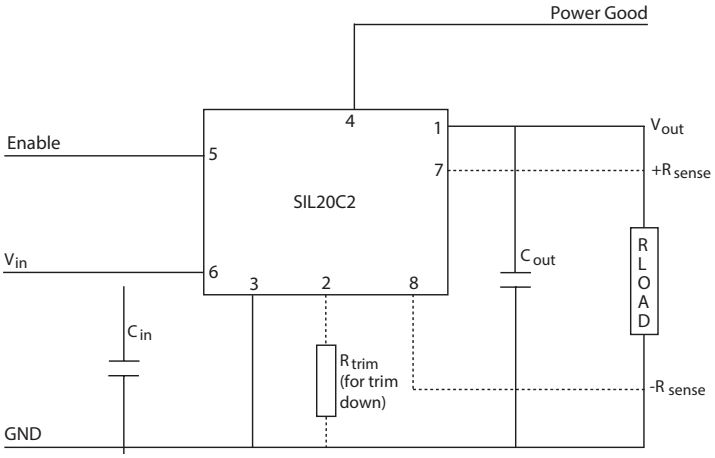

## MECHANICAL DRAWINGS

### Vertical Mount

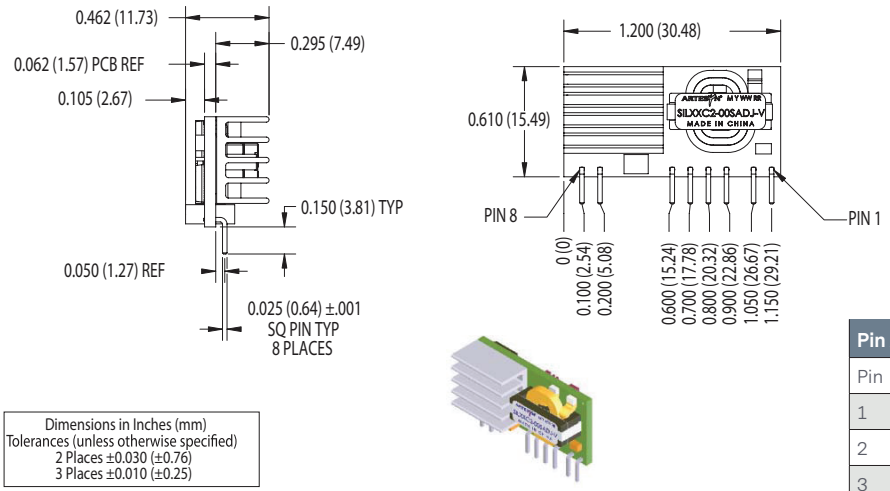


Dimensions in Inches (mm)
Tolerances (unless otherwise specified)
2 Places ±0.030 (±0.76)
3 Places ±0.010 (±0.25)

| Pin Assignments | |
|---|---|
| Pin | Function |
| 1 | Vout |
| 2 | Trim |
| 3 | Ground |
| 4 | Power Good |
| 5 | Enable |
| 6 | Vin |
| 7 | Remote Sense (+) |
| 8 | Remote Sense (-) |

### Horizontal Mount

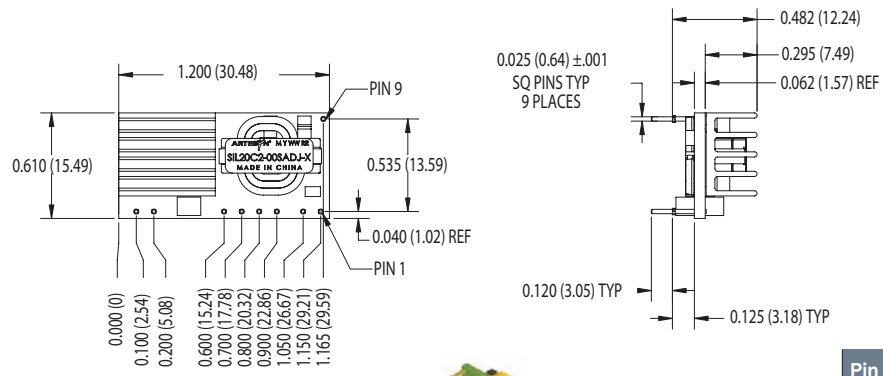


Dimensions in Inches (mm)
Tolerances (unless otherwise specified)
2 Places ±0.030 (±0.76)
3 Places ±0.010 (±0.25)

| Pin Assignments | |
|---|---|
| Pin | Function |
| 1 | Vout |
| 2 | Trim |
| 3 | Ground |
| 4 | Power Good |
| 5 | Enable |
| 6 | Vin |
| 7 | Remote Sense (+) |
| 8 | Remote Sense (-) |
| 9 | Mech Support (Horizontal version only) |

## MECHANICAL DRAWINGS (CONTINUED)

### Surface Mount

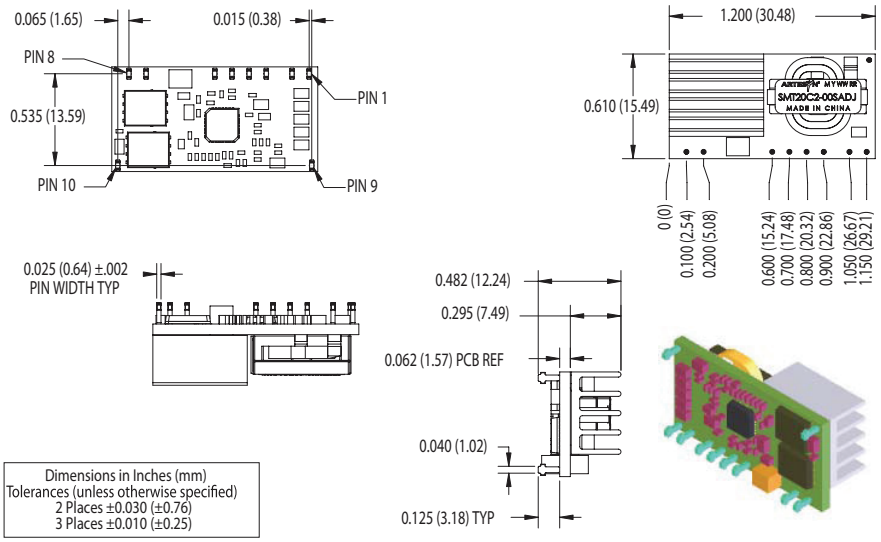


| Pin Assignments | |
|---|---|
| Pin | Function |
| 1 | Vout |
| 2 | Trim |
| 3 | Ground |
| 4 | Power Good |
| 5 | Enable |
| 6 | Vin |
| 7 | Remote Sense (+) |
| 8 | Remote Sense (-) |
| 9 | Mech Support (Horizontal Version only |
| 10 | Mech Support (Horizontal Version only |

## ABOUT ADVANCED ENERGY

Advanced Energy (AE) has devoted more than three decades to perfecting power for its global customers. AE designs and manufactures highly engineered, precision power conversion, measurement and control solutions for mission-critical applications and processes.

Our products enable customer innovation in complex applications for a wide range of industries including semiconductor equipment, industrial, manufacturing, telecommunications, data center computing, and medical. With deep applications know-how and responsive service and support across the globe, we build collaborative partnerships to meet rapid technological developments, propel growth for our customers, and innovate the future of power.

PRECISION | POWER | PERFORMANCE

For international contact information,
visit advancedenergy.com.

powersales@aei.com (Sales Support)
productsupport.ep@aei.com (Technical Support)
+1 888 412 7832

Specifications are subject to change without notice. Not responsible for errors or omissions. ©2020 Advanced Energy Industries, Inc. All rights reserved. Advanced Energy®, AE® and Artesyn™ are U.S. trademarks of Advanced Energy Industries, Inc.

ENG-SIL/SMT20C2-235-01 12.31