Advanced Energy®

HITEK POWER® XR150

X-RAY POWER SUPPLY MODULE



Complete high voltage power source for industrial x-ray systems, elemental analysis equipment, x-ray diffraction spectrometers, and materials process monitoring applications

Specifically developed for high-performance x-ray applications, the compact and reliable XR150 series is surface mountable and built with superior high voltage stress control and packaging techniques. The filament is automatically controlled by integral beam loop control and the power stage utilizes a current-fed resonant push-pull converter to provide high efficiency and reliability.

Features

- 150 W high voltage output
- 17 W floating filament
- High accuracy and stability
  - Emission accuracy: 0.1%
  - Regulation: 0.1%
  - Stability: 100 ppm
- Exceptionally compact
- Remote operation
- Analog or RS-232 control interface
- Safety interlock
- Extensive tube and system protection functions
- CE marked for EU LV directive 2006/95/EC
- EU RoHS compliant to 2002/95/EC

Typical Applications

- Inspection and analytical x-ray systems with floating filament tubes
  - X-ray fluorescence (XRF)
  - X-ray diffraction (XRD)
  - X-ray reflectivity (XRR)
  - X-ray imaging (XRI)
- Industrial process x-ray systems
  - Elemental analysis equipment
  - Process quality, safety, compliance
  - Materials monitoring
  - Food safety inspection
- Digital x-ray imaging and inspection
  - Industrial
  - Veterinary
  - Pharma, cellular, biotech
  - Security

ASK US ABOUT DERIVATIVES AND SPECIAL PRODUCTS BUILT TO YOUR REQUIREMENTS.

SPECIFICATIONS

Electrical Input	
Voltage	24 VDC ±1 VDC
Current	11 A, max
Electrical Output	
Voltage	0 to -60 kV; full spec applies above -3 kV
Current	0 to -2.5 mA
Power	150 W, max
Ripple	< 100 V, peak to peak
Filament	0 to 3.7 A (4.5 V, max)
	Controlled by internal beam control loop
Controls (Analog Version)	
Voltage Demand	0 to 5 VDC demands 0 to -60 kV ±0.5% ±100 V
Current Demand	0 to 5 VDC demands 0 to -2.5 mA ±2% ±5 µA
Filament Limit	Internally settable between 1 and 3.7 A
Controls (RS-232 Version)	
Voltage Demand	12 bit; 0 to FFF demands 0 to -60 kV ±0.5% ±100 V
Current Demand	12 bit; 0 to FFF demands 0 to -2.5 mA ±2% ±5 µA
Filament Standby	12 bit; 0 to FFF demands 0 to 3.7 A
Monitors (Analog)	
Output Voltage	0 to 5 V ±0.5% ±20 mV for 0 to -60 kV
Beam Current	0 to 5 V ±2% ±20 mV for 0 to -2.5 mA
Filament Current	0 to 5 V ±5% ±20 mV for 0 to 3.7 A
Filament Voltage	0 to 5 V ±5% ±20 mV for 0 to 5 V
Monitors (RS-232)	
Output Voltage	12 bit; 0 to FFF represents 0 to -60 kV
Output Current	12 bit; 0 to FFF represents 0 to -2.5 mA
Filament Current	12 bit; 0 to FFF represents 0 to 3.7 A
Filament Voltage	12 bit; 0 to FFF represents 0 to 5 V
Load Regulation, Output Voltage	
Static	< 60 V no load to full load
Dynamic	< 3 kV, recovery to within 1% of previous setting within 200 msec
Beam Current	< ±2 µA for a 10 to 100% of change of rated load
Line Regulation	
Output Voltage	< 60 V for a 1 V change in the 24 V supply
Beam Current	< ±2 µA for a 1 V change in the 24 V supply
Stability and Drift	
Temperature Coefficient	100 ppm/°C over operating temperature range
Drift	±0.1% of rating over an eight-hour period after 30 min warmup
Environmental	
Operating Temperature	0 to +40°C (+32 to +104°F)
Storage Temperature	-20 to +85°C (-4 to +185°F)

SPECIFICATION	
Humidity	80% maximum relative humidity up to 31°C (88°F), reducing linearly to 50% at 40°C (104°F), non-condensing (ref BS EN61010-1)
Vibration	In accordance with BS EN60068-2-6:1995 transport, when contained in the original packaging
Frequency Range	10 to 500 Hz
Acceleration	20 m/sec^2 crossover at 58 Hz
Displacement	0.15 mm (0.006″) max
Altitude	0 to 2000 m (0 to 6562′)
Installation Environment	Installation category 1, pollution degree 2, indoor use only
Cooling	Fan assisted
Connectors	
Input DC Power	Deutsch IMC24-1602
HV Output	HiTek Power®-designed detachable poke home connector
Filament Output	HiTek Power®-designed detachable poke home connector
Control Interface	15-way, D-type socket (analog)
	9-way, D-type socket (RS-232)
Protection, Safety, and Compliance	
Protection	Input voltage reverse polarity
	Over-temperature
	Over-current (continuous short circuit and intermittent arc) on both HV output and filament
	Over-voltage on both HV output and filament
Safety	This high voltage module meets the requirements of the Low Voltage Directive (LVD), 2006/95/EC by complying with BS EN61010-1:2001 when it is installed as a component part of other equipment and is CE marked accordingly.
EMC	This high voltage module is intended for installation as part of a system.
	Basic EMC filtering is provided.
RoHS	The XR150 series meets the requirements of EU Directive 2002/95/EC on the restriction of use of certain hazardous substances in electrical and electronic equipment (RoHS).
Mechanical Specification	
Dimensions (W x H x D)	80 mm x 179.5 mm x 320 mm; 3.15″ x 7.07″ x 12.6″ (excluding fan)
Weight	8 kg (18 lb)
Casing	Aluminum, clear non-chrome passivate finish
	See outline drawing (analog version).

ORDERING INFORMATION

Model	Output Voltage	Output Current
XR150-603*	-60 kV	2.5 mA

**Please add the required suffix for control option to the part number:*

A Analog control

C RS-232 control

Example: XR150-603C for RS-232 controlled unit

INTERFACE CONNECTIONS

Analog, 15-way, Female, D-Type Connector

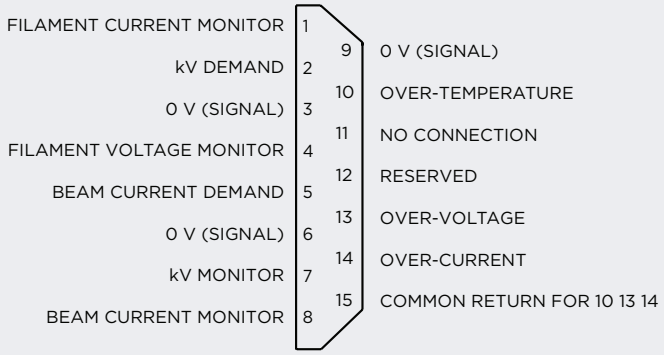

Digital, Remote-Control (RS-232) 9-Way, Female, D-Type Connector

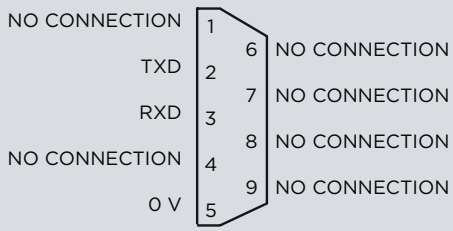

CE *These component power supplies meet the requirements of EC directive 2006/95/EC (LVD).*

Drawing dimensions are in mm (inches).
Design developments may result
in specification changes.



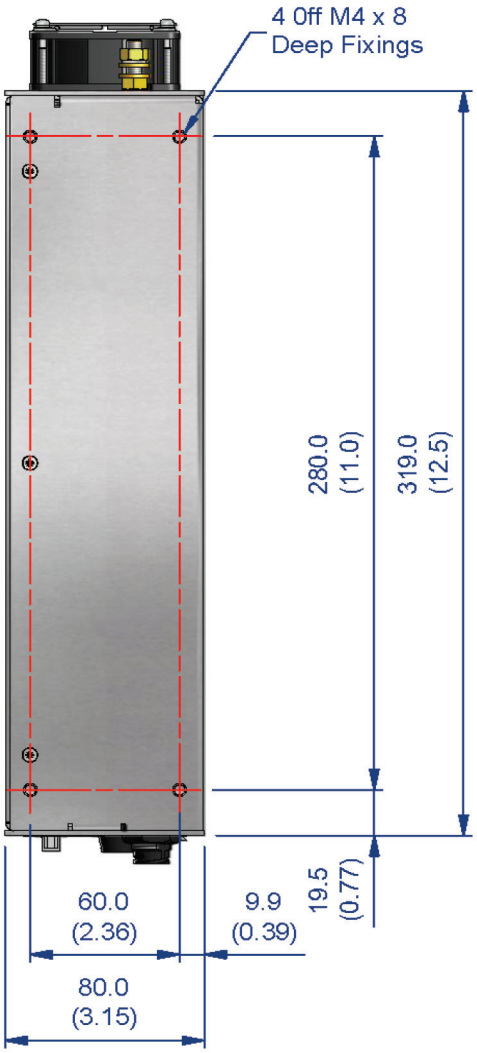







For international contact information, visit
advanced-energy.com.

ENG-HV-XR150-230-01 4.16

Specifications are subject to change without notice. ©2016 Advanced Energy Industries, Inc. All rights reserved. Advanced Energy®, AE® , and Hitek Power® are U.S. trademarks of Advanced Energy Industries, Inc.