mATX

AIMB-763 Series

Intel® Pentium® D / Pentium® 4 / Celeron® / Core™ 2 Duo ATX Main Board

User Manual

Notices

Federal Communications Commission Statement

This device complies with Part 15 of the FCC Rules. Operation is subject to the following two conditions:

- This device may not cause harmful interference, and
- This device must accept any interference received including interference that may cause undesired operation.

This equipment has been tested and found to comply with the limits for a Class B digital device, pursuant to Part 15 of the FCC Rules. These limits are designed to provide reasonable protection against harmful interference in a residential installation. This equipment generates, uses and can radiate radio frequency energy and, if not installed and used in accordance with manufacturer's instructions, may cause harmful interference to radio communications. However, there is no guarantee that interference will not occur in a particular installation. If this equipment does cause harmful interference to radio or television reception, which can be determined by turning the equipment off and on, the user is encouraged to try to correct the interference by one or more of the following measures:

- Reorient or relocate the receiving antenna.
- Increase the separation between the equipment and receiver.
- Connect the equipment to an outlet on a circuit different from that to which the receiver is connected.
- Consult the dealer or an experienced radio/TV technician for help.

Warning! *The use of shielded cables for connection of the monitor to the graphics card is required to assure compliance with FCC regulations. Changes or modifications to this unit not expressly approved by the party responsible for compliance could void the user's authority to operate this equipment.*

Canadian Department of Communications Statement

This digital apparatus does not exceed the Class B limits for radio noise emissions from digital apparatus set out in the Radio Interference Regulations of the Canadian Department of Communications.

This class B digital apparatus complies with Canadian ICES-003.

Safety information

Electrical safety

- To prevent electrical shock hazard, disconnect the power cable from the electrical outlet before relocating the system.
- When adding or removing devices to or from the system, ensure that the power cables for the devices are unplugged before the signal cables are connected. If possible, disconnect all power cables from the existing system before you add a device.
- Before connecting or removing signal cables from the motherboard, ensure that all power cables are unplugged.
- Seek professional assistance before using an adapter or extension cord. These devices could interrupt the grounding circuit.
- Make sure that your power supply is set to the correct voltage in your area. If you are not sure about the voltage of the electrical outlet you are using, contact your local power company.
- If the power supply is broken, do not try to fix it by yourself. Contact a qualified service technician or your retailer.

Operation safety

- Before installing the motherboard and adding devices on it, carefully read all the manuals that came with the package.
- Before using the product, make sure all cables are correctly connected and the power cables are not damaged. If you detect any damage, contact your dealer immediately.
- To avoid short circuits, keep paper clips, screws, and staples away from connectors, slots, sockets and circuitry.
- Avoid dust, humidity, and temperature extremes. Do not place the product in any area where it may become wet.
- Place the product on a stable surface.
- If you encounter technical problems with the product, contact a qualified service technician or your retailer.

Caution!



The symbol of the crossed out wheeled bin  *indicates that the product (electrical and electronic equipment) should not be placed in municipal waste. Check local regulations for disposal of electronic products.*

About this guide

This user guide contains the information you need when installing and configuring the motherboard.

How this guide is organized

This manual contains the following parts:

- Chapter 1: Product introduction

  This chapter describes the features of the motherboard and the new technology it supports. This chapter also lists the hardware setup procedures that you have to perform when installing system components. It includes description of the jumpers and connectors on the motherboard.

- Chapter 2: BIOS setup

  This chapter tells how to change system settings through the BIOS Setup menus. Detailed descriptions of the BIOS parameters are also provided.

Where to find more information

Refer to the following sources for additional information and for product and software updates.

1. Advantech websites

   The Advantech website provides updated information on Advantech hardware and software products. Refer to the Advantech contact information.

2. Optional documentation

   Your product package may include optional documentation, such as warranty flyers, that may have been added by your dealer. These documents are not part of the standard package.

Typography

Bold text	Indicates a menu or an item to select
Italics	Used to emphasize a word or a phrase
<Key>	Keys enclosed in the less-than and greater-than sign means that you must press the enclosed key Example: <Enter> means that you must press the Enter or Return key
<Key1>+<Key2>+<Key3>	If you must press two or more keys simultaneously, the key names are linked with a plus sign (+) Example: <Ctrl>+<Alt>+<D>

`Command`	Means that you must type the command exactly as shown, then supply the required item or value enclosed in brackets
	Example: At the DOS prompt, type the command line:
	`afudos /i[filename]`
	`afudos /iP5P800VM.ROM`

Contents

Chapter 1 Product Introduction 2
1.1 Welcome 2
1.2 Package contents 2
1.3 Special features 3
1.3.1 Product highlights 3
1.4 Before you proceed 6
Figure 1.1 Onboard LED 7
1.5 Motherboard overview 8
1.5.1 Placement direction 8
1.5.2 Screw holes 8
Figure 1.2 Screw holes 8
1.5.3 AIMB-763G2 Motherboard layout 9
Figure 1.3 AIMB-763G2 Motherboard layout 9
1.5.4 AIMB-763VG Motherboard layout 10
Figure 1.4 AIMB-763VG Motherboard layout 10
1.6 Central Processing Unit (CPU) 11
1.6.1 Installing the CPU 12
Figure 1.5 Locate the CPU socket on the motherboard 12
Figure 1.6 Release the load lever 12
Figure 1.7 Lift the load lever 13
Figure 1.8 Lift the load plate 13
Figure 1.9 Position the CPU over the socket 14
Figure 1.10 Close the load plate 14
1.6.2 Installing the CPU heatsink and fan 16
Figure 1.11 Place the heatsink on top of the installed CPU 17
Figure 1.12 Secure the heatsink and fan assembly in place 17
Figure 1.13 Connect the fan cable 18
1.6.3 Uninstalling the CPU heatsink and fan 19
Figure 1.14 Rotate each fastener counterclockwise 19
Figure 1.15 Disengage the heatsink and fan assembly 19
Figure 1.16 Remove the heatsink and fan assembly 20
Figure 1.17 Rotate each fastener clockwise 20
Figure 1.18 Narrow end of the groove 21
1.7 System memory 22
1.7.1 Overview 22
Figure 1.19 240-pin DDR2 DIMM sockets 22
Table 1.1 240-pin DDR2 DIMM Sockets 22

1.7.2 Memory configurations 23
1.7.3 DDR2 Qualified Vendors List 23
Table 1.2 DDR2 533 Qualified Vendors List 24
1.7.4 Installing a DIMM 25
Figure 1.20 Insatll a DIMM 25
1.7.5 Removing a DIMM 26
Figure 1.21 Remove a DIMM 26
1.8 Expansion slots 27
1.8.1 Installing an expansion card 27
1.8.2 Configuring an expansion card 27
1.8.3 PCI slots 28
Figure 1.22 A LAN card installed on a PCI slot 28
1.8.4 PCI Express x 16 28
Figure 1.23 PCI Express x 16 28
1.8.5 PCI Express x 1 29
Figure 1.24 PCI Express x 1 29
1.9 Jumpers 30
Figure 1.25 Clear RTC RAM 31
1.10 Connectors 32
1.10.1 AIMB-763G2 Rear panel connectors 32
Figure 1.26 AIMB-763G2 Rear panel connectors 32
1.10.2 AIMB-763VG Rear panel connectors 32
Figure 1.27 AIMB-763VG Rear panel connectors 32
Table 1.3 LAN port LED indications 33
Figure 1.28 LAN (RJ-45) Port 33
1.10.3 Internal connectors 34
Figure 1.29 Floppy disk drive connector 34
Table 1.4 Cable Select Mode 35
Table 1.5 Jumper Select Mode 35
Figure 1.30 IDE connectors 35
Figure 1.31 SATA connectors 36
Figure 1.32 Speaker connector 37
Figure 1.33 FAN connectors 38
Figure 1.34 Digital audio connector 38
Figure 1.35 Power LED connector 39
Figure 1.36 ATX power connector 40
Figure 1.37 CD audio connector 40
Figure 1.38 USB connectors 41
Figure 1.39 Front panel audio connector 41
Figure 1.40 Chassis Intrusion Connector 42
Figure 1.41 System panel connector 43
Figure 1.42 COM2 ports 44
Table 1.6 COM2 ports 44
Chapter 2 BIOS setup 46
2.1 Introduction 46

2.1.1 CMOS RAM Auto-backup and Restore 46
2.2 Entering Setup 47
Figure 2.1 Award BIOS Setup initial screen..... 47
2.3 Standard CMOS Setup 48
2.3.1 Date 48
2.3.2 Time 48
2.3.3 IDE channel 0/1 Master/Slave 48
2.3.4 Drive A / Drive B 48
2.3.5 Video 48
2.3.6 Halt On 49
2.3.7 Memory 49
Figure 2.2 Standard CMOS Features Screen 49
2.4 Advanced BIOS Features 50
Figure 2.3 Advanced BIOS features screen 50
2.4.1 CPU Features 50
2.4.2 Hard Disk Boot Priority 51
2.4.3 Virus Warning 51
2.4.4 CPU L1 & L2 Cache 51
2.4.5 Hyper-Threading Technology 51
2.4.6 Quick Power On Self Test 51
2.4.7 First/Second/Third Boot Device 51
2.4.8 Boot Other Device 51
2.4.9 Swap Floppy Drive 51
2.4.10 Boot Up Floppy Seek 51
2.4.11 Boot Up NumLock Status 51
2.4.12 Gate A20 Option 52
2.4.13 Typematic Rate Setting 52
2.4.14 Typematic Rate (Chars/Sec) 52
2.4.15 Typematic Delay (msec) 52
2.4.16 Security Option 52
2.4.17 APIC Mode 52
2.5 Advanced Chipset Features 53
Figure 2.4 Advanced chipset features screen 53
2.5.1 DRAM Timing Selectable 53
2.5.2 CAS Latency Time 53
2.5.3 DRAM RAS# to CAS# Delay 54
2.5.4 DRAM RAS# Precharge 54
2.5.5 Precharge Delay (t RAS) 54
2.5.6 System Memory Frequency 54
2.5.7 System BIOS Cacheable 54
2.5.8 Video BIOS Cacheable 54
2.5.9 Memory Hole At 15M-16M 55
2.5.10 PEG/Onchip VGA Control 55
2.5.11 On-Chip Frame Buffer Size 55
2.5.12 DVMT Mode 55

2.5.13 DVMT/Fixed Memory Size 55
2.6 Integrated Peripherals 56
Figure 2.5 Integrated peripherals 56
Figure 2.6 On-Chip IDE Device 56
2.6.1 IDE HDD Block Mode 57
2.6.2 IDE DMA Transfer Access 57
2.6.3 On-Chip IDE Device 57
2.6.4 On-Chip Serial ATA 57
2.6.5 SATA PORT Speed Settings 57
2.6.6 PATA IDE Mode 57
2.6.7 SATA Port 57
Figure 2.7 Onboard Device 58
2.6.8 USB Controller 58
2.6.9 USB 2.0 Controller 58
2.6.10 USB Keyboard Support 58
2.6.11 Azalia/AC97 Audio Select 58
2.6.12 Onboard LAN1 Control 58
2.6.13 Onboard LAN2 Control 59
Figure 2.8 Super I/O Device 59
2.6.14 POWER ON Function 59
2.6.15 Hot Key Power On 59
2.6.16 Onboard FDC Controller 59
2.6.17 Onboard Serial Port 1 59
2.6.18 Onboard Serial Port 2 60
2.6.19 Onboard Parallel Port 60
2.6.20 Parallel Port Mode 60
2.6.21 EPP Mode Select 60
2.6.22 ECP Mode Use DMA 60
2.6.23 PWRON After PWR-Fail 60
2.6.24 Onboard Serial Port 3/4 60
2.6.25 Serial Port 3/4 use IRQ 60
2.7 Power Management Setup 61
Figure 2.9 Power management setup screen (1) 61
Figure 2.10 Power management setup screen (2) 61
2.7.1 PCI Express PM Function 62
2.7.2 ACPI Function 62
2.7.3 ACPI Suspend Type 62
2.7.4 Run VGABIOS if S3 Resume 62
2.7.5 Power Management 62
Table 2.1 Power Saving 62
2.7.6 Video Off Method 62
2.7.7 Video Off In Suspend 63
2.7.8 Suspend Type 63
2.7.9 Suspend Mode 63
2.7.10 HDD Power Down 63

2.7.11 Soft-Off by PWR-BTTN 63
2.7.12 Wake-Up by PCI card 63
2.7.13 PowerOn by Ring 63
2.7.14 USB KB Wake-Up From S3 63
2.7.15 Resume by Alarm 63
2.7.16 Primary IDE 0 (1) and Secondary IDE 0 (1) 63
2.7.17 FDD, COM, LPT PORT 64
2.7.18 PCI PIRQ [A-D]# 64
2.8 PnP/PCI Configurations 65
Figure 2.11 PnP/PCI configurations screen 65
2.8.1 Init Display First 65
2.8.2 Reset Configuration Data 65
2.8.3 Resources Controlled By 65
2.8.4 PCI/VGA Palette Snoop 65
2.8.5 Maximum Payload Size 65
2.9 PC Health Status 66
Figure 2.12 PC Health Status Screen 66
2.9.1 Current System Temperature 66
2.9.2 Current CPU Temperature 66
2.9.3 SYSTEM FAN1 Speed 66
2.9.4 CPU FAN Speed 66
2.9.5 VCORE and Other Voltages 66
2.10 Frequency / Voltage Control 67
Figure 2.13 Spread Spectrum Control screen 67
2.10.1 Auto Detect PCI Clk 67
2.10.2 Spread Spectrum 67
2.11 Password Setting 68
2.12 Save & Exit Setup 68
2.13 Exit Without Saving 68
Appendix A Specifications 70
A.1 AIMB-763G2 specifications summary 70
Table A.1 AIMB-763G2 specifications summary 70
A.2 AIMB-763VG specifications summary 72
Table A.2 AIMB-763VG specifications summary 72

CHAPTER 1

Product Introduction

This chapter describes the motherboard features and the new technologies it supports.

Sections include:

- Welcome
- Package features
- Special features
- Before you proceed
- Motherboard overview
- Central Processing Unit (CPU)
- System memory
- Expansion slots
- Jumpers
- Connectors

Chapter 1 Product Introduction

This chapter describes the motherboard features and the new technologies it supports.

1.1 Welcome

Thank you for buying an Advantech® AIMB-763 motherboard!

The motherboard delivers a host of new features and latest technologies, making it another standout in the long line of quality motherboards!

Before you start installing the motherboard and hardware devices on it, check the items in your package with the list below.

1.2 Package contents

Check your motherboard package for the following items.

Motherboard	AIMB-763
Cables	2 x Serial ATA signal cable 2 x Serial ATA power cable 1 x Floppy disk drive cable
Accessory	I/O shield
Application CD	Motherboard support CD
Documentation	Startup Manual

Notes

If any of the above items is damaged or missing, contact your retailer.

1.3 Special features

1.3.1 Product highlights

Latest processor technology

The motherboard comes with a 775-pin surface mount Land Grid Array (LGA) socket designed for the Intel® Pentium® D, Pentium® 4, Celeron® or Core™ 2 Duo processor in the 775-land package. The motherboard supports the Intel® Pentium® 4, Intel® Pentium® D or Core™ 2 Duo processor with 1066/800/533 MHz Front Side Bus (FSB). The motherboard also supports the Intel® Hyper-Threading Technology and is fully compatible with Intel® PCG 04B/04A and 05B/05A processors.

Intel® 65nm Dual-Core Technology CPU support

This motherboard supports Intel® Pentium® D/Pentium® 4/Celeron® / Core™ 2 Duo processors built on the 65-nanometer (nm) process technology with copper interconnect.

Dual-core processors contain two physical CPU cores with dedicated L2 cachesto meet demands for more powerful processing. Intel®'s 65nm process is the most advanced chip manufacturing technology, delivering breakthrough performance, enhanced media experience, and low power consumption. Intel® 65nm dual-core processors utilize the latest package technologies for a thinner, lighter design without compromising performance.

Intel® 945G chipset

The Intel® 945G graphics memory controller hub (GMCH) and the ICH7 DH I/O controller hub provide the vital interfaces for the motherboard.

The GMCH features the Intel® Graphics Media Accelerator 950, an integrated graphics engine for enhanced 3D, 2D, and video capabilities. The GMCH provides the interface for a processor in the 775-land package with 533/800/1066 MHz front side bus (FSB), dual channel DDR2 at speeds of up to 667 MHz, and PCI Express x16 graphics card.

The Intel® ICH7 DH Southbridge represents the seventh generation I/O controller hub that provides the interface for PCI Express and 8-channel high definition audio.

Intel® Viiv™ Technology support

Intel® Viiv™ Technology transforms your PC into an entertainment center, allowing you to enjoy and share digital multi-media content like never before. With Intel® Viiv™ Technology-based computers, you can record, playback, organize, and edit digital media content easily. Enjoy the entertainment experience even more with sharp graphics, flawless video playback, and support for up to 7.1 channel surround sound. To enable Intel® Viiv™ Technology, make sure you enable the Quick Resume function called Energy Lake in the BIOS. You also need to install the Intel® Viiv™ Technology driver and software.

Enabling Intel Viiv platform also requires:

- Intel® Pentium® D processor, Intel® Pentium® processor Extreme Edition or Intel® Core™ 2 Duo
- Native Command Queuing (NCQ) SATA hard drive
- Microsoft Windows XP Media Center Edition Update Rollup 2
  Refer to www.Intel.com for more information.

DDR2 memory support

The motherboard supports DDR2 memory which features data transfer rates of 600 MHz (FSB 800) or 533 MHz (FSB 1066/800) to meet the higher bandwidth requirements of the latest 3D graphics, multimedia, and Internet applications. The dual-channel DDR2 architecture doubles the bandwidth of your system memory to boost system performance, eliminating bottlenecks with peak bandwidths of up to 8.5 GB/s.

PCI Express™ interface

The motherboard fully supports PCI Express, the latest I/O interconnect technology that speeds up the PCI bus. PCI Express features point-to-point serial interconnections between devices and allows higher clock-speeds by carrying data in packets. This high speed interface is software compatible with existing PCI specifications.

64-bit CPU support

The motherboard supports 64-bit processors that provides high-performance computing and faster memory access required for memory and data intensive applications.

Serial ATA technology

The motherboard supports the Serial ATA technology through the Serial ATA interfaces and the Intel® ICH7 DH chipset. The SATA specification allows for thinner, more flexible cables with lower pin count, reduced voltage requirement, and up to 300 MB/s data transfer rate.

8-channel high definition audio

The onboard Realtek® ALC888 8-channel high-definition audio CODEC provides 192 KHz/ 24-bit audio output, jack-sensing and restasking functions. With the 8-channel audio ports and S/PDIF interfaces, you can connect your computer to home theater decoders to produce crystal-clear digital audio.

S/PDIF digital sound ready

The motherboard supports the S/PDIF Out function through the S/PDIF interfaces at midboard. The S/PDIF technology turns your computer into a high-end entertainment system with digital connectivity to powerful audio and speaker systems.

Temperature, fan, and voltage monitoring

The CPU temperature is monitored by the ASIC (integrated in the Winbond Super I/O) to prevent overheating and damage. The system fan rotations per minute (RPM) is monitored for timely failure detection. The ASIC monitors the voltage levels to ensure stable supply of current for critical components.

1.4 Before you proceed

Take note of the following precautions before you install motherboard components or change any motherboard settings.

Caution!



- *Unplug the power cord from the wall socket before touching any component.*
- *Use a grounded wrist strap or touch a safely grounded object or a metal object, such as the power supply case, before handling components to avoid damaging them due to static electricity.*
- *Hold components by the edges to avoid touching the ICs on them.*
- *Whenever you uninstall any component, place it on a grounded antistatic pad or in the bag that came with the component.*
- *Before you install or remove any component, ensure that the ATX power supply is switched off or the power cord is detached from the power supply. Failure to do so may cause severe damage to the motherboard, peripherals, and/or components.*

Onboard LED

The motherboard comes with a standby power LED that lights up to indicate that the system is ON, in sleep mode, or in soft-off mode. This is a reminder that you should shut down the system and unplug the power cable before removing or plugging in any otherboard component. The illustration below shows the location of the onboard LED.

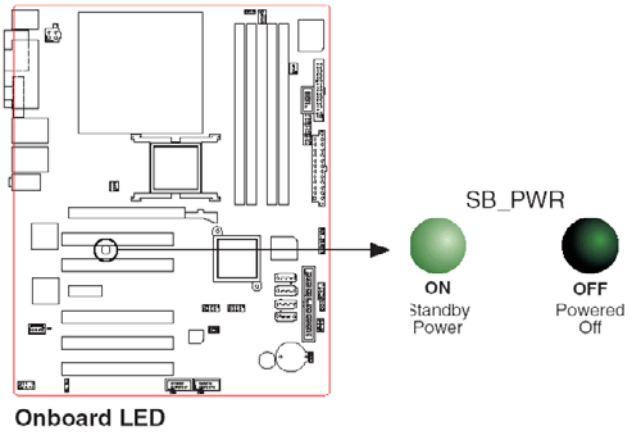

Figure 1.1: Onboard LED

1.5 Motherboard overview

Before you install the motherboard, study the configuration of your chassis to ensure that the motherboard fits into it.

Warning! *Make sure to unplug the power cord before installing or removing the motherboard. Failure to do so can cause you physical injury and damage motherboard components.*

1.5.1 Placement direction

When installing the motherboard, make sure that you place it into the chassis in the correct orientation. The edge with external ports goes to the rear part of the chassis as indicated in the image below.

1.5.2 Screw holes

Place eight (10) screws into the holes indicated by circles to secure the motherboard to the chassis.

Caution! *Do not overtighten the screws! Doing so can damage the motherboard.*

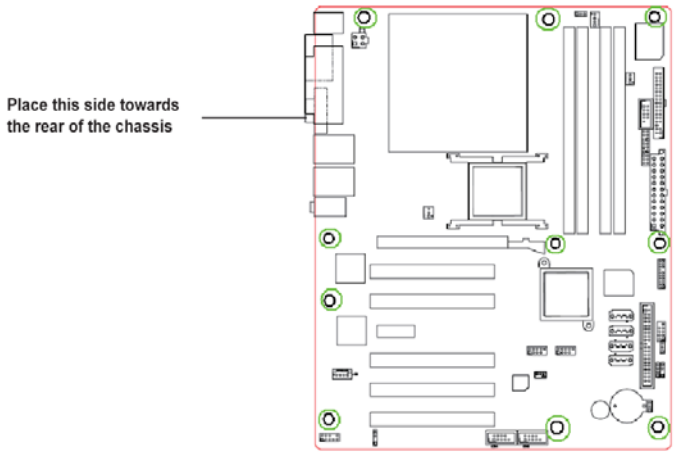

Figure 1.2: Screw holes

1.5.3 AIMB-763G2 Motherboard layout

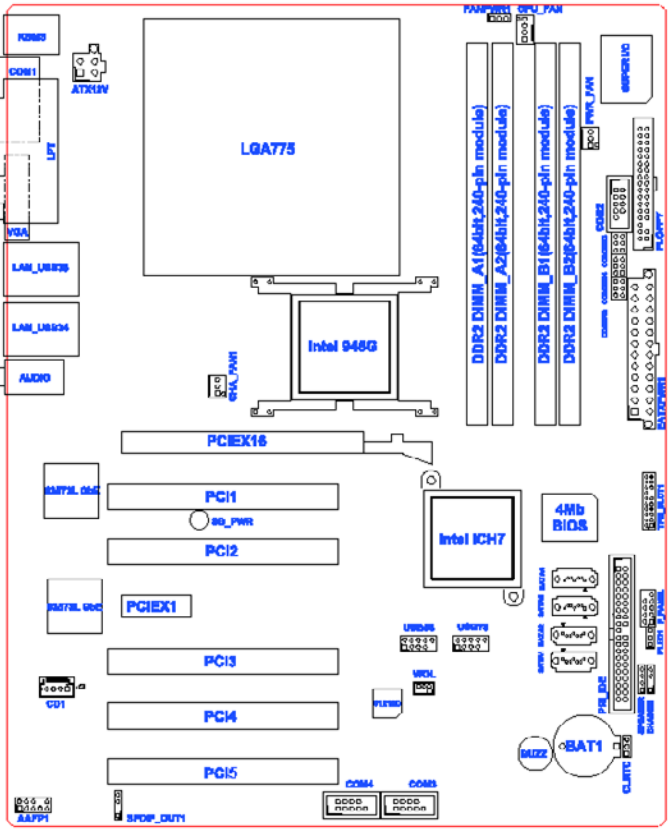

Figure 1.3: AIMB-763G2 Motherboard layout

1.5.4 AIMB-763VG Motherboard layout

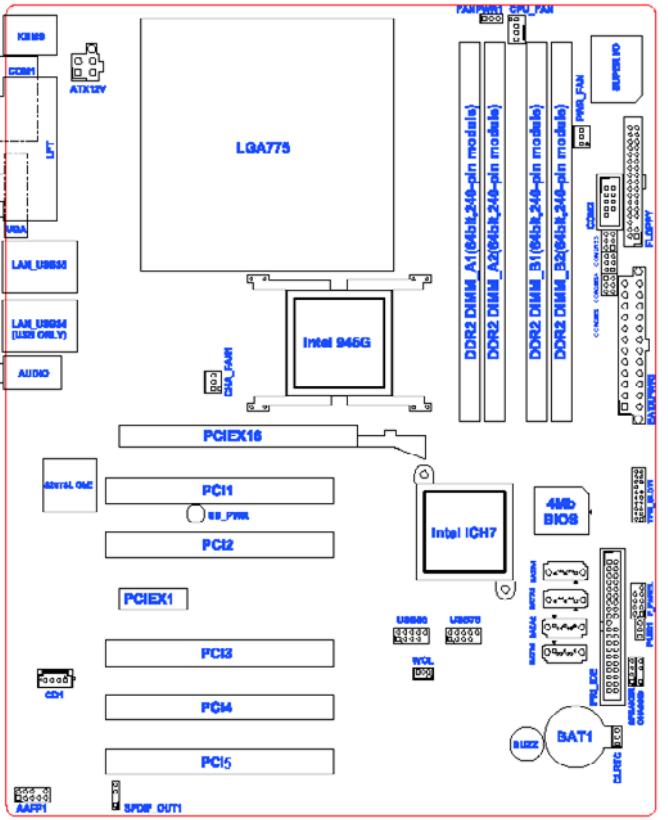

Figure 1.4: AIMB-763VG Motherboard layout

1.6 Central Processing Unit (CPU)

The motherboard comes with a surface mount LGA775 socket designed for the Intel® Pentium® D / Pentium® 4 / Celeron® / Core™ 2 Duo processor in the 775-land package.

Caution!



- *Your boxed Intel® Pentium® D / Pentium® 4 / Celeron® / Core™ 2 Duo LGA775 processor package should come with installation instructions for the CPU, fan and heatsink assembly. If the instructions in this section do not match the CPU documentation, follow the latter.*
- *Upon purchase of the motherboard, make sure that the PnP cap is on the socket and the socket pins are not bent. Contact your retailer immediately if the PnP cap is missing, or if you see any damage to the PnP cap/socket pins/motherboard components. Advantech will shoulder the cost of repair only if the damage is shipment/transit-related.*
- *Keep the cap after installing the motherboard. Advantech will process Return Merchandise Authorization (RMA) requests only if the motherboard comes with the cap on the LGA775 socket.*
- *The product warranty does not cover damage to the socket pins resulting from incorrect CPU installation/ removal, or misplacement/loss/incorrect removal of the PnP cap.*

1.6.1 Installing the CPU

To install a CPU:

1. Locate the CPU socket on the motherboard.

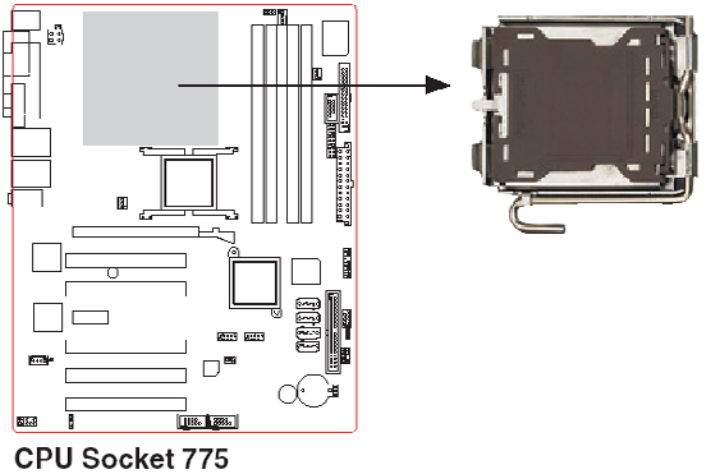

Figure 1.5: Locate the CPU socket on the motherboard

Notes

Before installing the CPU, make sure that the socket box is facing towards you and the load lever is on your left.

2. Press the load lever with your thumb (A) and move it to the left (B) until it is released from the retention tab.

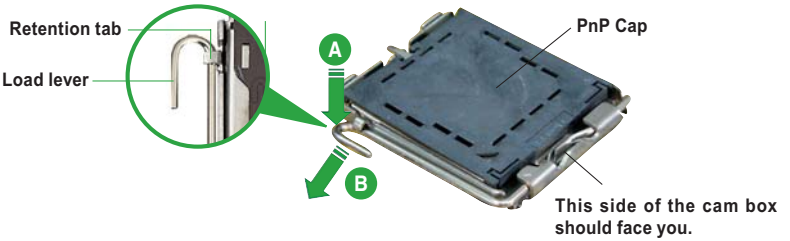

Figure 1.6: Release the load lever

Caution! *To prevent damage to the socket pins, do not remove the PnP cap unless you are installing a CPU.*

3. Lift the load lever in the direction of the arrow to a 135° angle.

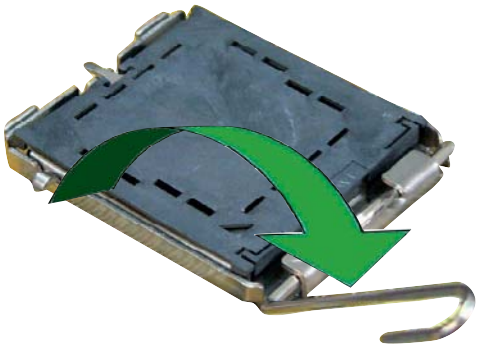

Figure 1.7: Lift the load lever

4. Lift the load plate with your thumb and forefinger to a 100° angle (A), then push the PnP cap from the load plate window to remove (B).

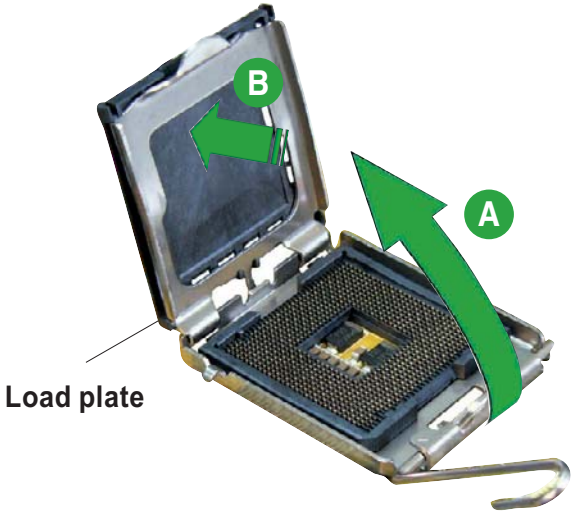

Figure 1.8: Lift the load plate

5. Position the CPU over the socket, making sure that the gold triangle is on the bottom-left corner of the socket. The socket alignment key should fit into the CPU notch.

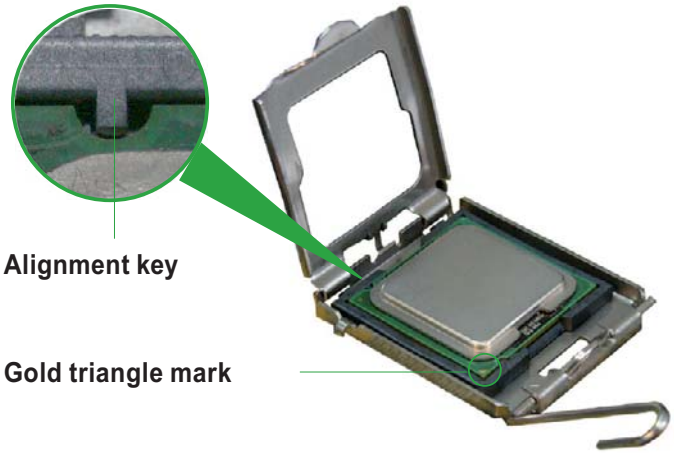

Figure 1.9: Position the CPU over the socket

6. Close the load plate (A), then push the load lever (B) until it snaps into the retention tab.

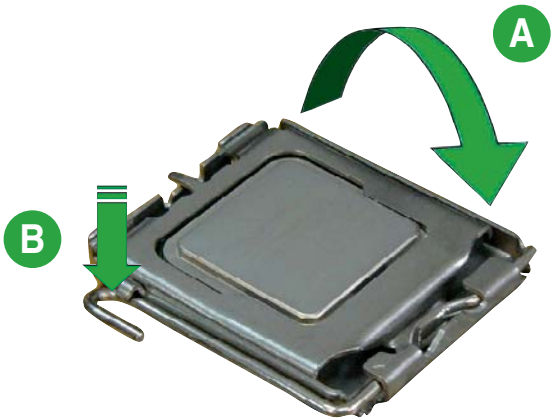

Figure 1.10: Close the load plate

Caution! *The CPU fits in only one correct orientation. DO NOT force the CPU into the socket to prevent bending the connectors on the socket and damaging the CPU!*



Notes

This motherboard supports Intel® Pentium® D or Intel® Pentium® 4 LGA775 with the Intel® Enhanced Memory 64 Technology (EM 64T), Enhanced Intel SpeedStep® Technology (EIST), and Hyper-Threading Technology. Refer to the Appendix for more information on these CPU features.

1.6.2 Installing the CPU heatsink and fan

The Intel® Pentium® D / Pentium® 4 / Celeron® / Core™ 2 Duo LGA775 processor requires a specially designed heatsink and fan assembly to ensure optimum thermal condition and performance.

Notes

- *Install the motherboard to the chassis before you install the CPU fan and heatsink assembly.*
- *When you buy a boxed Intel® Pentium® D / Pentium® 4 / Celeron® / Core™ 2 Duo processor, the package includes the CPU fan and heatsink assembly. If you buy a CPU separately, make sure that you use only Intel®-certified multi-directional heatsink and fan.*
- *Your Intel® Pentium® D / Pentium® 4 / Celeron® / Core™ 2 Duo LGA775 heatsink and fan assembly comes in a push-pin design and requires no tool to install.*

Warning! *If you purchased a separate CPU heatsink and fan assembly, make sure that a Thermal Interface Material is properly applied to the CPU heatsink or CPU before you install the heatsink and fan assembly.*

To install the CPU heatsink and fan:

1. Place the heatsink on top of the installed CPU, making sure that the four fasteners match the holes on the motherboard.

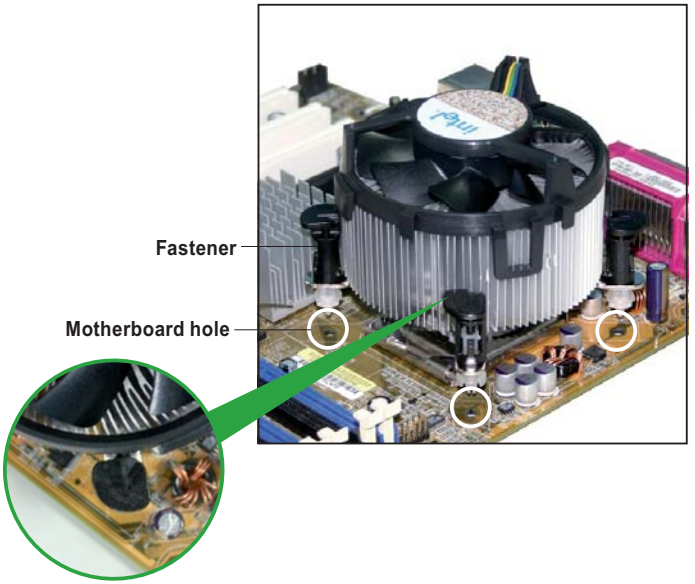

Figure 1.11: Place the heatsink on top of the installed CPU

Notes

Make sure each fastener is oriented as shown, with the narrow groove directed outward.

2. Push down two fasteners at a time in a diagonal sequence to secure the heatsink and fan assembly in place.

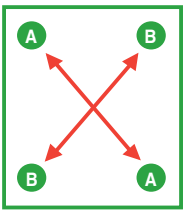

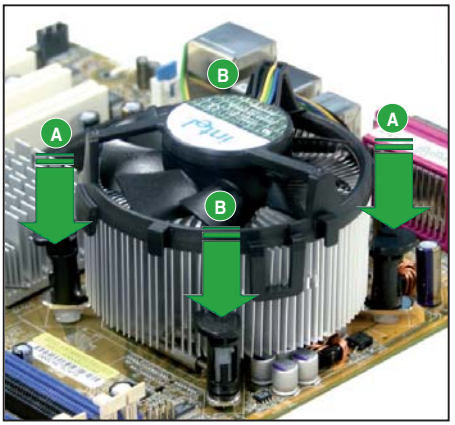

Figure 1.12: Secure the heatsink and fan assembly in place

3. When the fan and heatsink assembly is in place, connect the CPU fan cable to the connector on the motherboard labeled CPU_FAN.

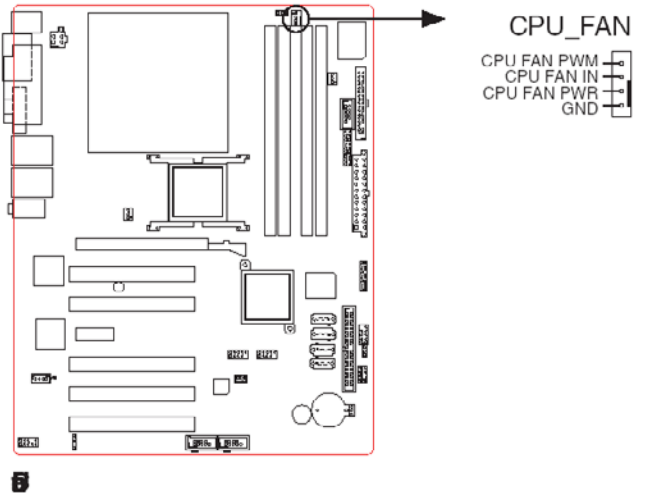

Figure 1.13: Connect the fan cable

Notes

Do not forget to connect the CPU fan connector! Hardware monitoring errors can occur if you fail to plug this connector.

1.6.3 Uninstalling the CPU heatsink and fan

To uninstall the CPU heatsink and fan:

1. Disconnect the CPU fan cable from the connector on the motherboard.
2. Rotate each fastener counterclockwise.

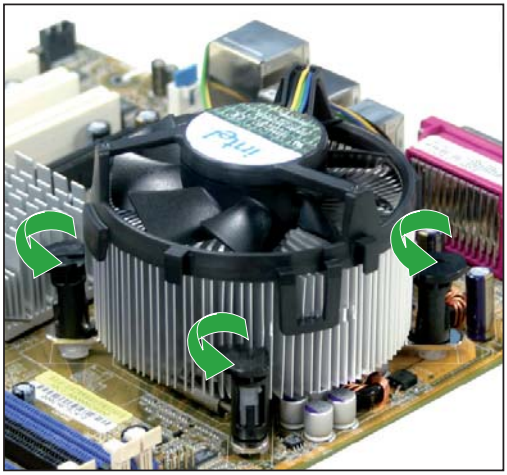

Figure 1.14: Rotate each fastener counterclockwise

3. Pull up two fasteners at a time in a diagonal sequence to disengage the heatsink and fan assembly from the motherboard.

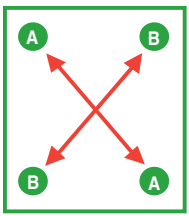

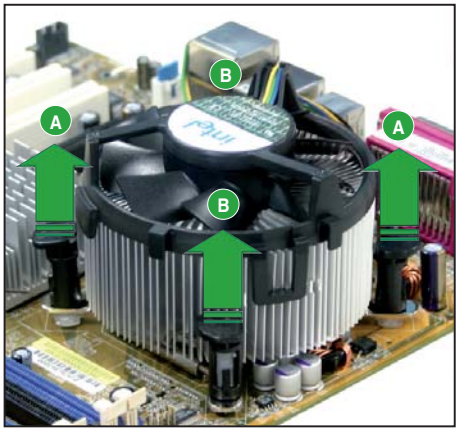

Figure 1.15: Disengage the heatsink and fan assembly

4. Remove the heatsink and fan assembly from the motherboard.

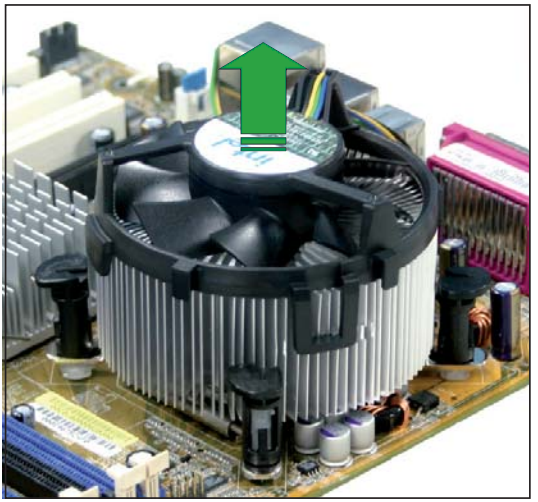

Figure 1.16: Remove the heatsink and fan assembly

5. Rotate each fastener clockwise to reset the orientation.

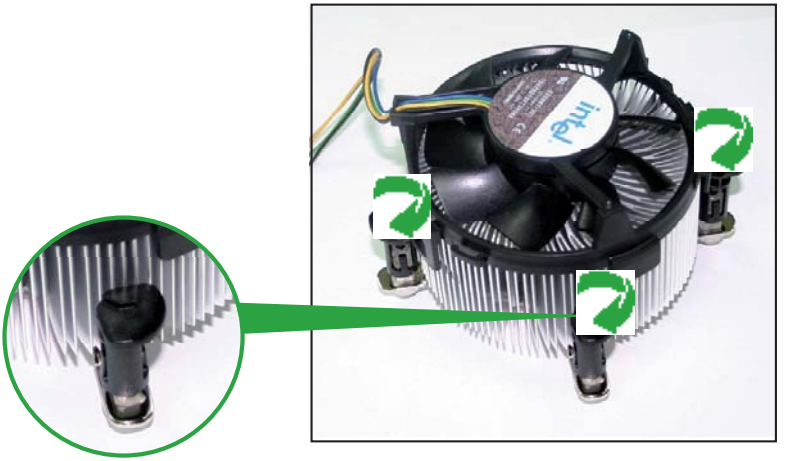

Figure 1.17: Rotate each fastener clockwise

Notes

The narrow end of the groove should point outward after resetting. (The photo shows the groove shaded for emphasis.)



Figure 1.18: Narrow end of the groove

1.7 System memory

1.7.1 Overview

The motherboard comes with four Double Data Rate 2 (DDR2) Dual Inline Memory Modules (DIMM) sockets.

A DDR2 module has the same physical dimensions as a DDR DIMM but has a 240-pin footprint compared to the 184-pin DDR DIMM. DDR2 DIMMs are notched differently to prevent installation on a DDR DIMM socket.

The figure illustrates the location of the DDR2 DIMM sockets:

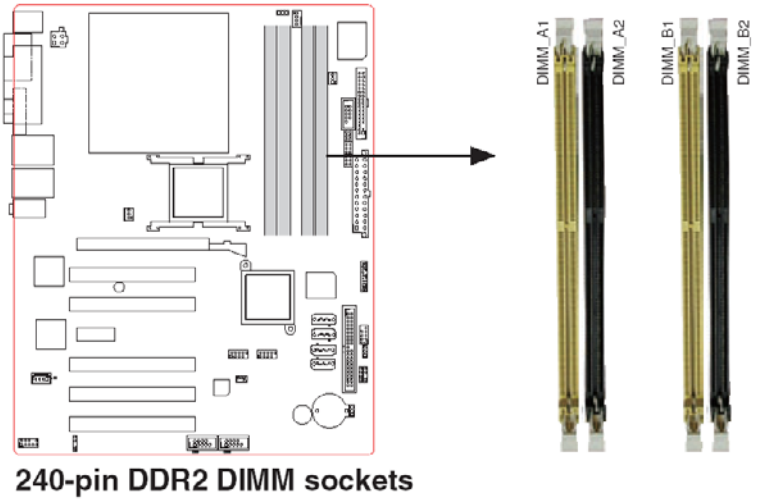

Figure 1.19: 240-pin DDR2 DIMM sockets

Table 1.1: 240-pin DDR2 DIMM Sockets	
Channel	**Sockets**
ChannelA	DIMM_A1 and DIMM_A2
ChannelB	DIMM_B1 and DIMM_B2

1.7.2 Memory configurations

You may install 64 MB, 128 MB, 256 MB, 512 MB and 1 GB unbuffered ECC or non-ECC DDR DIMMs into the DIMM sockets using the memory configurations in this section.

Notes

- *IF you installed four 1GB memory modules, the system may detect less than 3GB of total memory because of address space allocation for other critical functions. This limitation applies to Windows XP 32-bit version operating system since it does not support PAE (Physical Address Extension) mode.*
- *IF you install Windows XP 32-bit version operating system, we recommend that you install less than 3GB of total memory.*
- *For dual-channel configuration, the total size of memory module (s) installed per channel must be the same for better performance (DIMM_A1+DIMM_A2=DIMM_B1+DIMM_B2).*
- *When using one DDR DIMM module, install into DIMM_B1 slot only.*
- *When using two DDR DIMM modules, install into DIMM_A1 and DIMM_B1 slots only.*
- *Always install DIMMs with the same CAS latency. For optimum compatability, it is recommended that you obtain memory modules from the same vendor. Refer to the memory Qualified Vendors List on the next page for details.*
- *Due to CPU limitation, DIMM modules with 128 Mb memory chips or double-sided x 16 memory chips are not supported in this motherboard.*
- *When using one DDR DIMM module, install into DIMM_B1 slot only.*
- *When using two DDR DIMM modules, install into DIMM_A1 and DIMM_B1 slots only.*

1.7.3 DDR2 Qualified Vendors List

The following table lists the memory modules that have been tested and qualified for use with this motherboard. Visit the website for the latest DDR2 DIMM modules for this motherboard.

Table 1.2: DDR2 533 Qualified Vendors List

						DIMM support		
Size	**Vendor**	**Model**	**Brand**	**Side(s)**	**Component**	**A**	**B**	**C**
512MB	Samsung	M378T6553BG0-CD5	N/A	SS	K4T51083QB-GCD5	V	V	V
256MB	Samsung	M378T3253FG0-CD5	N/A	SS	K4T56083QF-GCD5	V	V	V
512MB	Samsung	M378T6453FG0-CD5	N/A	DS	K4T56083QF-GCD5	V	V	V
512MB	Infineon	HYS64T64000GU-3.7-A	Infineon	SS	HYB18T512800AC37		V	V
256MB	Infineon	HYS64T32000HU-3.7-A	Infineon	SS	HYB18T512160AF-3.7	V	V	V
1024MB	Infineon	HYS64T128020HU-3.7-A	Infineon	DS	HYB18T512800AF37	V	V	V
512MB	Infineon	HYS64T64000HU-3.7-A	Infineon	SS	HYB18T512800AF37	V	V	V
512MB	CORSAIR	CM2X512-4200	N/A	DS	N/A	V	V	V
512MB	Micron	MT16HTF6464AG-53EB2	Micron	DS	4FBIID9BQM	V	V	
1024MB	Micron	MT16HTF12864AY-53EA1	Micron	DS	4JAIID9CRZ	V	V	V
256MB	Micron	MT8HTF3264AY-53EB3	Micron	SS	4FBIID9CHM	V		V
512MB	Micron	MT16HTF6464AY-53EB2	Micron	DS	4FBIID9CHM	V	V	V
1024MB	Kingston	D6408TE7BL-37	N/A	DS	E5108AB-5C-E	V	V	V
256MB	Kingston	E5116AB-5C-E	N/A	SS	HYB18T512160AC-3.7	V	V	V
512MB	Kingston	HY5PS56821F-C4	ELPIDA	SS	E5108AB-5C-E	V	V	V
512MB	Hynix	HYMP564U648-C4	N/A	SS	HY5PS12821F-C4	V	V	V
512MB	Hynix	HY5PS1282AFP-C3	N/A	SS	HYMP564U64AP8-C3	V	V	V
1024MB	Hynix	HYMP512U648-C4	N/A	DS	HY5PS12821FP-C4	V	V	V
512MB	ELPIDA	EBE51UD8ABFA-5C	ELPIDA	DS	E5108AB-5C-E	V	V	V
1024MB	ELPIDA	EBE11UD8ABFA-5C-E	ELPIDA	DS	E5108AB-5C-E	V	V	V
512MB	Hynix	HYMP564U64AP8-Y5	Hynix	SS	HY5PS12821AFP-Y5	V	V	V
1024MB	Hynix	HYMP512U64AP8-Y4	Hynix	DS	HY5PS12821AFP-Y4	V	V	V
512MB	Hynix	HYMP564U64AP8-Y4	Hynix	SS	HY5PS12821AFP-Y4	V	V	V
256MB	Micron	MT8HTF3264AY-667B5	Micron	SS	4SB42D9CZM	V	V	V
256MB	Micron	MT8HTF3264AY-667B6	Micron	SS	5FB42D9DPN	V	V	V
512MB	Infineon	HYS64T64000HU-3S-A	Infineon	SS	HYB18T512800AF3S	V	V	V
256MB	Infineon	HYS64T32000HU-3S-A	Infineon	SS	HYB18T512160AF-3S	V	V	V
1024MB	Infineon	HYS64T128020HU-3S-A	Infineon	DS	HYB18T512800AF3S	V	V	V
256MB	ELPIDA	EBE25UC8ABFA-6E-E	ELPIDA	SS	E2508AB-GE-E	V	V	V
512MB	ELPIDA	EBE51UD8AEFA-6E-E	ELPIDA	SS	E5108AE-GE-E	V	V	V
1024MB	ELPIDA	EBE11UD8AEFA-6E-E	N/A	DS	N/A	V	V	V

Sides(s): SS-Single-side DS-Double-sided

DIMM support:

A. supports one module inserted into either slot, in a Single-channel memory configuration.

B. supports one pair of modules inserted into either blue or black slots as one pair of Dual-channel memory configuration.

C. supports for 4 modules inserted into the yellow and black slots as two pairs of Dual-channel memory configuration.

1.7.4 Installing a DIMM

Caution! *Unplug the power supply before adding or removing DIMMs or other system components. Failure to do so can cause severe damage to both the motherboard and the components.*

To install a DIMM:

1. Unlock a DIMM socket by pressing the retaining clips outward.
2. Align a DIMM on the socket such that the notch on the DIMM matches the break on the socket.
3. Firmly insert the DIMM into the socket until the retaining clips snap back in place and the DIMM is properly seated.

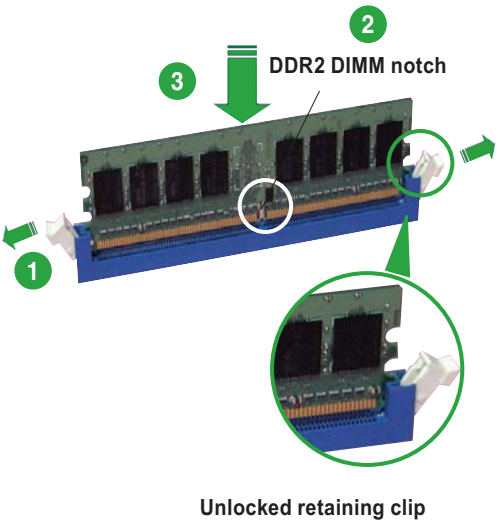

Figure 1.20: Insatll a DIMM

Notes

- *A DDR2 DIMM is keyed with a notch so that it fits in only one direction. Do not force a DIMM into a socket to avoid damaging the DIMM.*
- *The DDR2 DIMM sockets do not support DDR DIMMs. DO not install DDR DIMMs to the DDR2 DIMM sockets.*

1.7.5 Removing a DIMM

Follow these steps to remove a DIMM.

1. Simultaneously press the retaining clips outward to unlock the DIMM.

Notes

Support the DIMM lightly with your fingers when pressing the retaining clips. The DIMM might get damaged when it flips out with extra force.

.

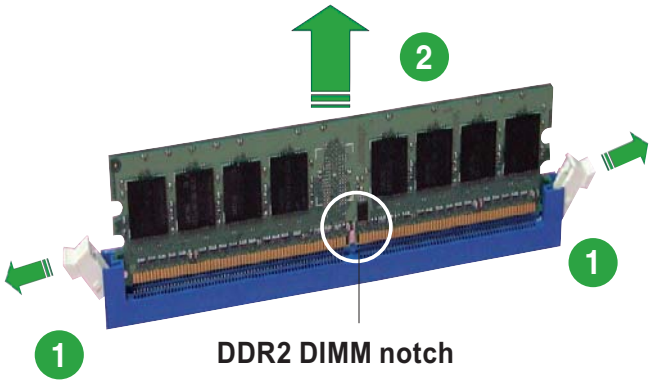

Figure 1.21: Remove a DIMM

2. Remove the DIMM from the socket.

1.8 Expansion slots

In the future, you may need to install expansion cards. The following subsections describe the slots and the expansion cards that they support.

Warning! *Make sure to unplug the power cord before adding or removing expansion cards. Failure to do so may cause you physical injury and damage motherboard components.*



1.8.1 Installing an expansion card

To install an expansion card:

1. Before installing the expansion card, read the documentation that came with it and make the necessary hardware settings for the card.
2. Remove the system unit cover (if your motherboard is already installed in a chassis).
3. Remove the bracket opposite the slot that you intend to use. Keep the screw for later use.
4. Align the card connector with the slot and press firmly until the card is completely seated on the slot.
5. Secure the card to the chassis with the screw you removed earlier.
6. Replace the system cover.

1.8.2 Configuring an expansion card

After installing the expansion card, configure it by adjusting the software settings.

1. Turn on the system and change the necessary BIOS settings, if any. See Chapter 2 for information on BIOS setup.
2. Assign an IRQ to the card. Refer to the tables on the next page.
3. Install the software drivers for the expansion card.

1.8.3 PCI slots

The PCI slots support cards such as a LAN card, SCSI card, USB card, and other cards that comply with PCI specifications. The figure shows a LAN card installed on a PCI slot.



Figure 1.22: A LAN card installed on a PCI slot

1.8.4 PCI Express x 16

This motherboard supports one PCI Express x 16 graphics card. The figure shows a typical graphics card that can be installed on the PCI Express x 16 slot.

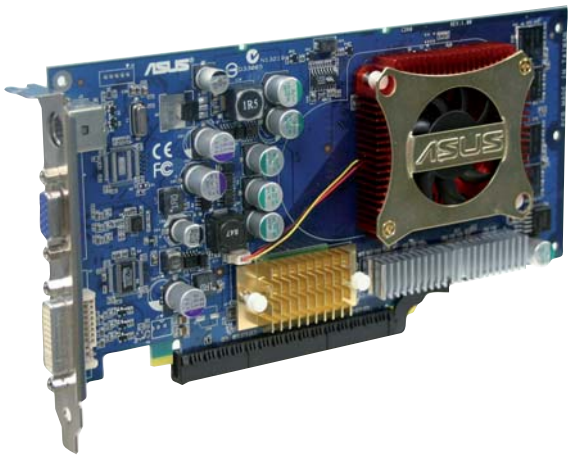

Figure 1.23: PCI Express x 16

1.8.5 PCI Express x 1

This mother board supports PCI Express x1 network cards, SCSI cards and other cards that comply with the PCI Express specifications. The figure shows the type of net work card that can be installed on the PCI Express x1 slot.



Figure 1.24: PCI Express x 1

1.9 Jumpers

1. Clear RTC RAM (CLRTC)

   This jumper allows you to clear the Real Time Clock (RTC) RAM in CMOS. You can clear the CMOS memory of date, time, and system setup parameters by erasing the CMOS RTC RAM data. The onboard button cell battery powers the RAM data in CMOS, which include system setup information such as system passwords.

To erase the RTC RAM:

1 Turn OFF the computer and unplug the power cord.

2 Remove the onboard battery.

3 Move the jumper cap from pins 1-2 (default) to pins 2-3. Keep the cap on pins 2-3 for about 5~10 seconds, then move the cap back to pins 1-2.

4 Re-install the battery.

5 Plug the power cord and turn ON the computer.

6 Hold down the <Del> key during the boot process and enter BIOS setup to re-enter data.

Caution! *Except when clearing the RTC RAM, never remove the cap on CLRTC jumper default position. Removing the cap will cause system boot failure!*



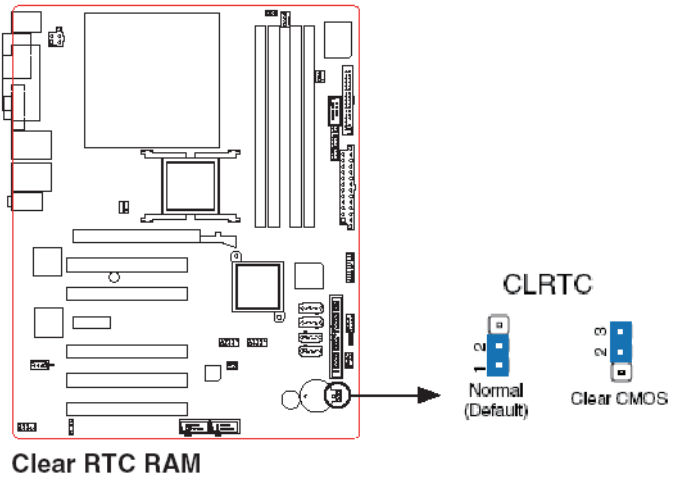

Figure 1.25: Clear RTC RAM

Notes

You do not need to clear the RTC when the system hangs due to overclocking. For system failure due to overclocking, use the C.P.R. (CPU Parameter Recall) feature. Shut down and reboot the system so the BIOS can automatically reset parameter settings to default values.

1.10 Connectors

1.10.1 AIMB-763G2 Rear panel connectors

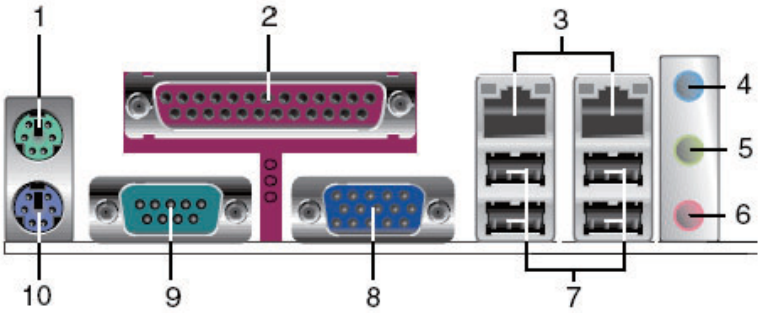

Figure 1.26: AIMB-763G2 Rear panel connectors

1.10.2 AIMB-763VG Rear panel connectors

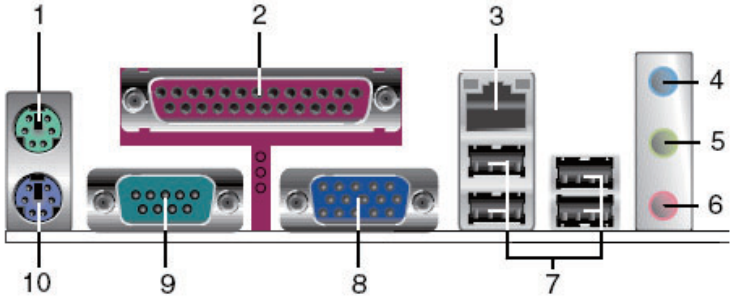

Figure 1.27: AIMB-763VG Rear panel connectors

1. PS/2 mouse port (green). This port is for a PS/2 mouse.
2. Parallel port. This 25-pin port connects a parallel printer, a scanner, or other devices.
3. LAN (RJ-45) port. This port allows Gigabit connection to a Local Area Network (LAN) through a network hub. Refer to the table below for the LAN port LED indications.

Table 1.3: LAN port LED indications

ACT/LINK LED		SPEED LED	
Status	**Description**	**Status**	**Description**
OFF	No link	OFF	10 Mbps connection
GREEN	Linked	ORANGE	100 Mbps connection
BLINKING	Data activity	GREEN	1 Gbps connection

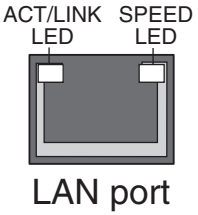

Figure 1.28: LAN (RJ-45) Port

4. Line In port (light blue). This port connects a tape, CD, DVD player, or other audio sources.
5. Line Out port (lime). This port connects a headphone or a speaker. In 4-channel and 6-channel configuration, the function of this port becomes Front Speaker Out.
6. Microphone port (pink). This port connects a microphone.
7. USB 2.0 ports. These 4-pin Universal Serial Bus (USB) ports are available for connecting USB 2.0 devices.
8. VGA port. This 15-pin VGA port connects to a VGA monitor.
9. Serial connector. This 9-pin COM1 port is for serial devices.
10. PS/2 keyboard port (purple). This port is for a PS/2 keyboard.

1.10.3 Internal connectors

1. Floppy disk drive connector (34-1 pin FLOPPY)

This connector is for the provided floppy disk drive (FDD) signal cable. Insert one end of the cable to this connector, then connect the other end to the signal connector at the back of the floppy disk drive.

Notes

Pin 5 on the connector is removed to prevent incorrect cable connection when using an FDD cable with a covered Pin 5.

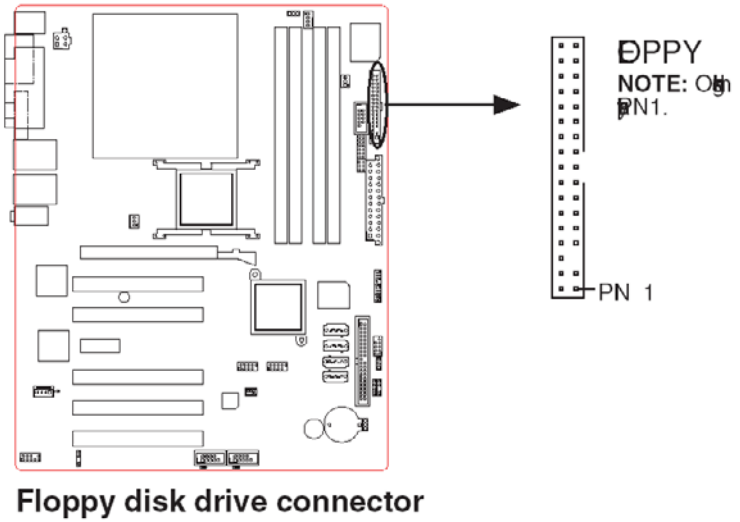

Figure 1.29: Floppy disk drive connector

2. Primary IDE connectors (40-1 pin PRI_IDE)

These connectors are for Ultra DMA 133/100/66 signal cables. There are three interfaces on each Ultra DMA 133/100/66 signal cables: blue, black, and gray. Connect the blue interface into the motherboad's IDE connector, then select one of the following modes to configure your hard disk drive(s).

Cable Select Mode - user this mode to select the operating mode by cable connectors.

Table 1.4: Cable Select Mode

No. of drives	Drive type	Drive jumper	Cable connector
1	With OS	Cable select	Black
2	With OS		Black
	Without OS		Gray

Jumper Select Mode - use this mode to select the operating mode by hard disk drive jumper.

Table 1.5: Jumper Select Mode

No. of drives	Drive type	Drive jumper	Cable connector
1	With OS	Master	Black or gray
2	With OS	Master	
	Without OS	Slave	

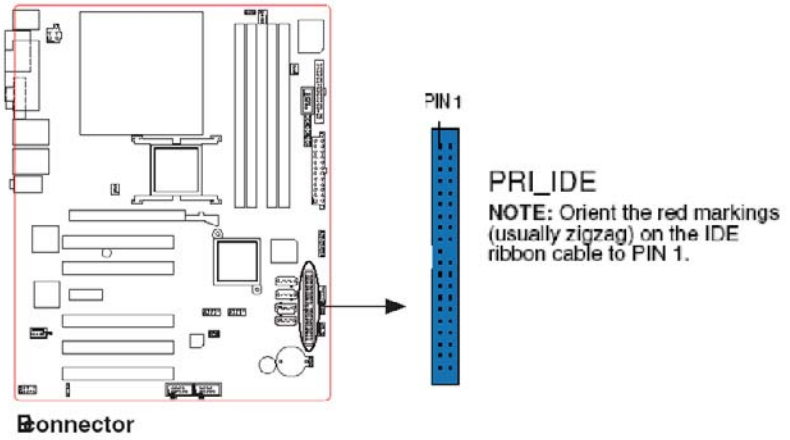

Figure 1.30: IDE connectors

3. Serial ATA connectors (7-pin SATA1, SATA2, SATA3, SATA4)

These connectors are for the Serial ATA signal cables for Serial ATA hard disk drives.

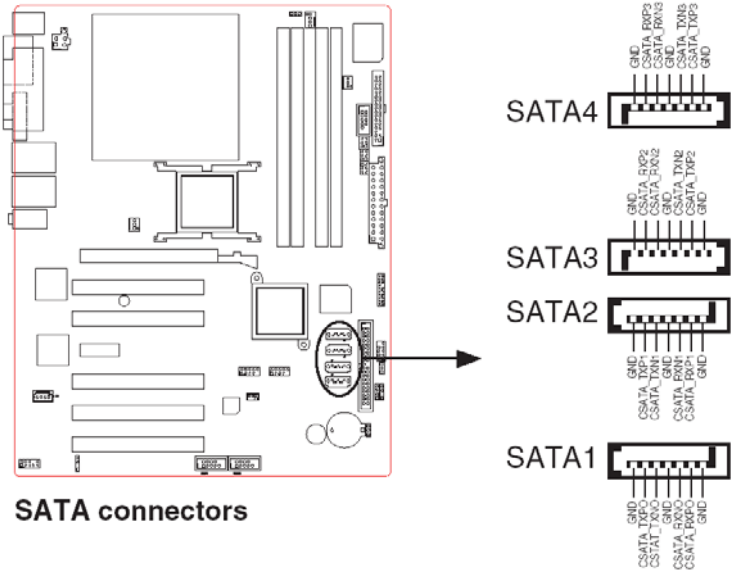

Figure 1.31: SATA connectors

Notes

Install the Windows® 2000 Service Pack 4 or the Windows® XP Service Pack1 or later before using Serial ATA.

4. Speaker connector (4-pin SPEAKER)

This 4-pin connector is for the chassis-mounted system warning speaker. The speaker allows you to hear system beeps and warnings.

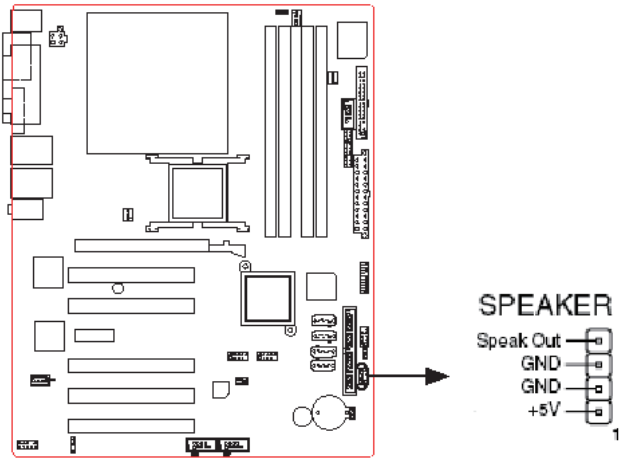

Figure 1.32: Speaker connector

5. CPU, Power and Chassis fan connectors
(4-pin CPU_FAN, 3-pin PWR_RAN, 3-pin CHA_FAN)

The fan connectors support cooling fans of 350mA~740mA (8.88W max.) or a total of 1A~2.22A (26.64W max.) at +12V. Connect the fan cables to the fan connectors on the motherboard, making sure that the black wire of each cable matches the ground pin of the connector.

Caution! *Do not forget to connect the fan cables to the fan connectors. Insufficient air flow inside the system may damage the motherboard components. These are not jumpers! DO NOT place jumper caps on the fan connectors.*

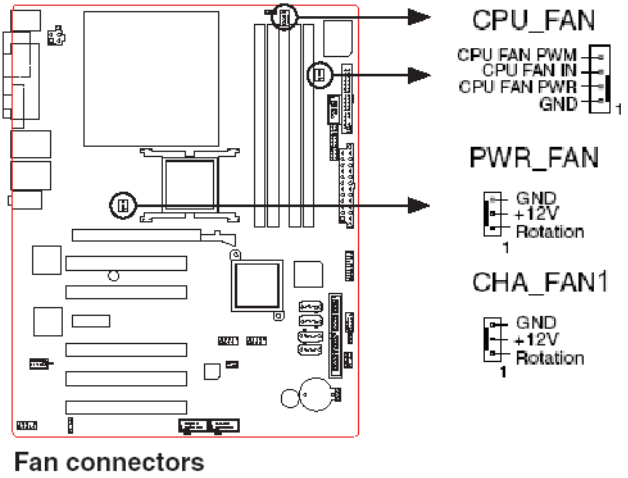

Figure 1.33: FAN connectors

6. Digital Audio connector (4-1 pin SPDIF_OUT)

This connector is for the S/PDIF audio module to allow digital sound output. Connect one end of the S/PDIF audio cable to this connector and the other end to the S/PDIF module.

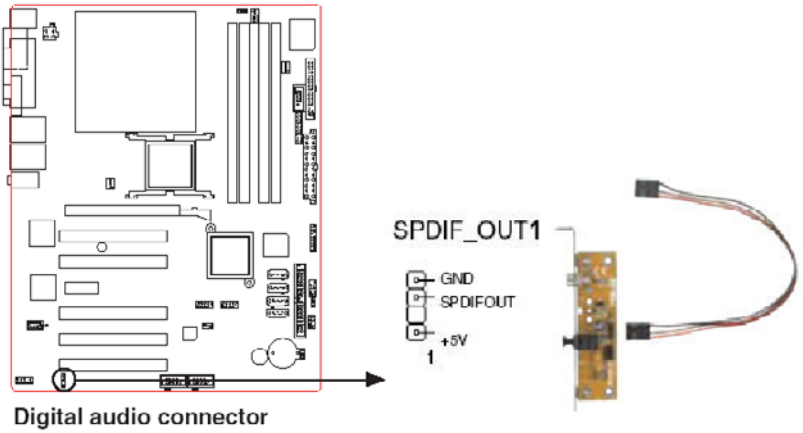

Figure 1.34: Digital audio connector

Notes

The S/PDIF out module is purchased separately.

7. Power LED connector (3-pin PLED)

This 3-pin connector is for the system power LED. The system power LED lights up when you turn on the system power, and blinks when the system is in sleep mode.

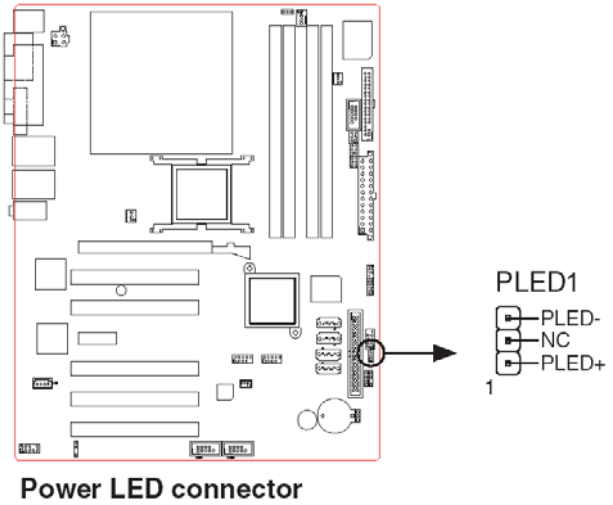

Figure 1.35: Power LED connector

8. ATX power connectors (24-pin EATXPWR and 4-pin ATX12V)

These connectors are for ATX power supply plugs. The power supply plugs are designed to fit these connectors in only one orientation. Find the proper orientation and push down firmly until the connectors completely fit.

Notes

- *Do not forget to connect the 4-pin ATX +12 V power plug; otherwise, the system will not boot.*
- *Use of a PSU with a higher power output is recommended when configuring a system with more power-consuming devices. The system may become unstable or may not boot up if the power is inadequate.*
- *Make sure that your power supply unit (PSU) can provide at least the minimum power required by your system. See the table below for details.*

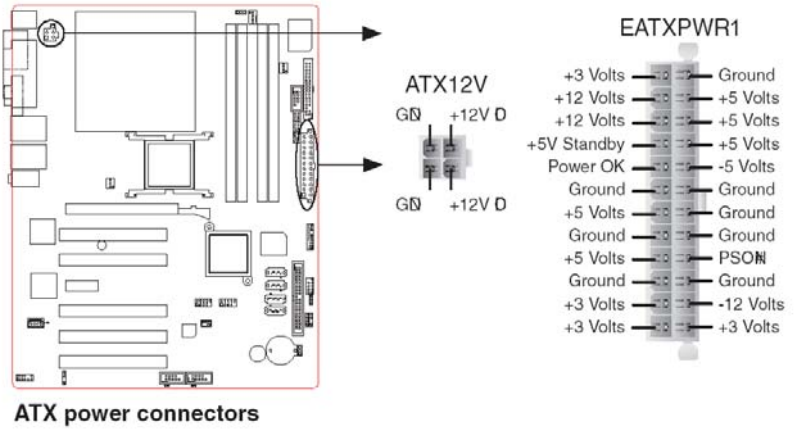

Figure 1.36: ATX power connector

9. Optical drive audio connector (4-pin CD)

This connector is for the 4-pin audio cable that connects to the audio connector at the back of the optical drive.

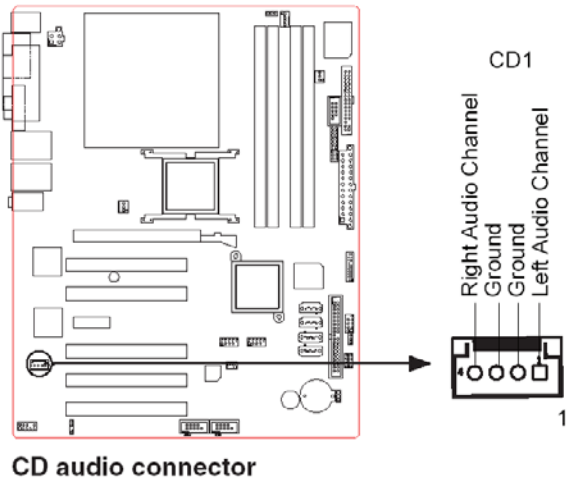

Figure 1.37: CD audio connector

Notes

Enable the CD-IN function in the audio utility when using this connector.

10. USB connectors (10-1 pin USB56, USB78)

These connectors are for USB 2.0 ports. Connect the optional USB module cable to any of these connectors, then install the module to a slot opening at the back of the system chassis. These USB connectors comply with USB 2.0 specification that supports up to 480 Mbps connection speed.

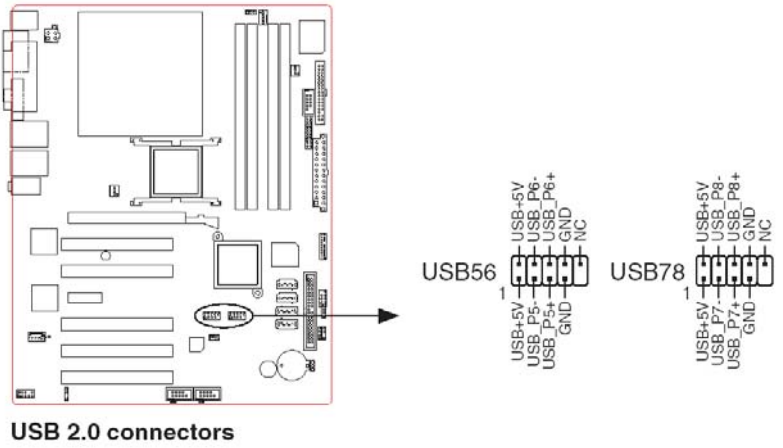

Figure 1.38: USB connectors

11. Front panel audio connector (10-1 pin AAFP)

This connector is for a chassis-mounted front panel audio I/O module that supports either HD Audio or legacy AC '97 audio standard.

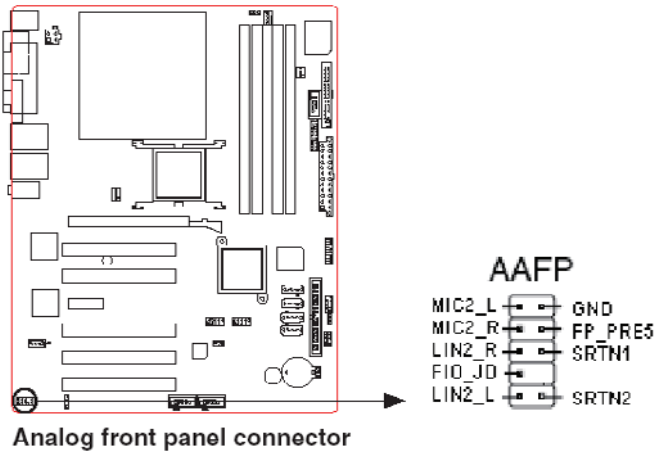

Figure 1.39: Front panel audio connector

Notes

It is recommended that you connect a high-definition front panel audio module to this connector to avail of the motherboard's high-definition audio capability.

12. Chassis intrusion connector (4-1 pin CHASSIS)

This connector is for a chassis-mounted intrusion detection sensor or switch. Connect one end of the chassis intrusion sensor or switch cable to this connector. The chassis intrusion sensor or switch sends a high-level signal to this connector when a chassis component is removed or replaced. The signal is then generated as a chassis intrusion event.

By default, the pins labeled "Chassis Signal" and "Ground" are shorted with a jumper cap. Remove the jumper caps only when you intend to use the chassis intrusion detection feature.

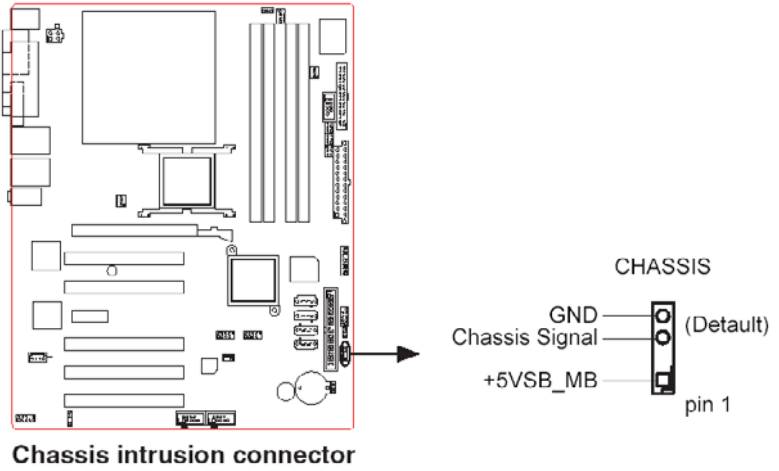

Figure 1.40: Chassis Intrusion Connector

13. System panel connector (10-1 pin F_PANEL)

This connector supports several chassis-mounted functions.

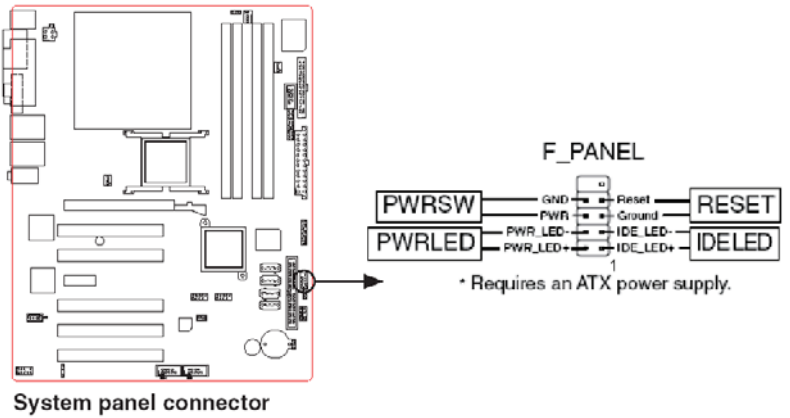

Figure 1.41: System panel connector

Notes

The sytem panel connector is color-coded for easy connection. Refer to the connector description below for details.

- Power/Soft-off button (Black 2-pin PWRSW)

  This connector is for the system power button. Pressing the power button turns the system ON or puts the system in SLEEP or SOFT-OFF mode depending on the BIOS settings. Pressing the power switch for more than four seconds while the system is ON turns the system OFF.

- System Power LED connector (2-pin PWRLED)

  This 2-pin connector is for the system power LED. The system power LED lights up when you turn on the system power, and blinks when the system is in sleep mode.

- Reset button (Blue 2-pin RESET)

  This 2-pin connector is for the chassis-mounted reset button for system reboot without turning off the system power.

- Hard disk drive activity (Red 2-pin IDELED)

  This 2-pin connector is for the HDD Activity LED. Connect the HDD Activity LED cable to this connector. The IDE LED lights up or flashes when data is read from or written to the HDD.

14. COM2 ports
(6-pin COM2RS, 6-pin COM2RS3 and 6-pin COM2RS4)

These three 6-pin connectors allow you to configure COM2 to either RS232 (default value), RS422 or RS485.

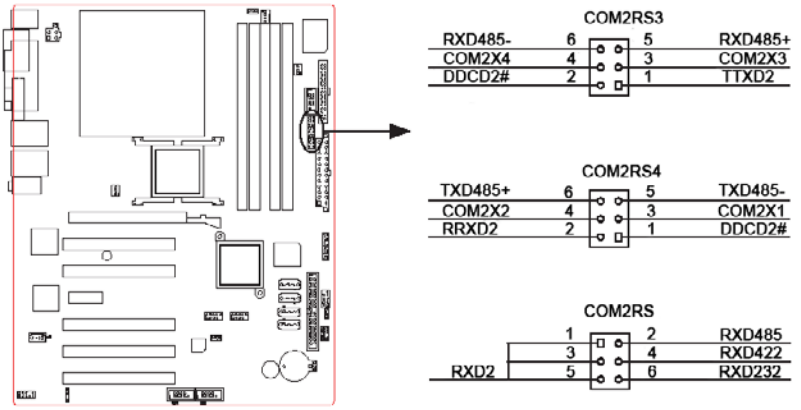

Figure 1.42: COM2 ports

Table 1.6: COM2 ports

	RS232	RS422	RS485
COM2RS3	1-3	3-5	3-5
	2-4	4-6	4-6
COM2RS4	1-3	3-5	3-5
	2-4	4-6	4-6
COM2RS	5-6	3-4	1-2

Notes

COM3 and COM4 only support RS232.

CHAPTER 2

BIOS setup

This chapter tells how to change the system settings through the BIOS Setup menus. Detailed descriptions of the BIOS parameters are also provided.

Sections include:

- Introduction
- Entering Setup
- Standard CMOS Setup
- Advanced BIOS Features
- Advanced Chipset Features
- Integrated Peripherals
- Power Management Setup
- PnP/PCI Configurations
- PC Health Status
- Frequency / Voltage Control
- Password Setting
- Sava & Exit Setup
- Exit Without Saving

Chapter 2 BIOS setup

This chapter tells how to change the system settings through the BIOS Setup menus. Detailed descriptions of the BIOS parameters are also provided.

2.1 Introduction

Award's BIOS ROM has a built-in setup program that allows users to modify the basic system configuration. This type of information is stored in battery backed-up memory (CMOS RAM) so that it retains the setup information when the power is turned off.

2.1.1 CMOS RAM Auto-backup and Restore

The CMOS RAM is powered by an onboard button cell battery. When you finish BIOS setup, the data in CMOS RAM will be automatically backed up to Flash ROM. If operation in harsh industrial environments causes a soft error, BIOS will recheck the data in CMOS RAM and automatically restore the original data in Flash ROM to CMOS RAM for booting.

Notes

If you intend to change the CMOS setting with-out restoring the previous backup, you have to click on "DEL" within two seconds of the "CMOS checksum error..." display screen message appearing. Then enter the "Setup" screen to modify the data. If the "CMOS checksum error..." message appears again and again, please check to see if you need to replace the battery in your system.

2.2 Entering Setup

Turn on the computer and press <Del> to enter the BIOS setup.



Figure 2.1: Award BIOS Setup initial screen

2.3 Standard CMOS Setup

2.3.1 Date

The date format is <week>, <month>, <day>, <year>.

2.3.2 Time

The time format is <hour> <minute> <second>, based on the 24-hour clock.

2.3.3 IDE channel 0/1 Master/Slave

- **IDE HDD Auto-Detection:** Press “Enter” to select this option for automatic device detection.
- **IDE Device Setup:**

  Auto: Automatically detects IDE devices during POST

  None: Select this when no IDE device is used. The system will skip the auto-detection step to make system start up faster.

  Manual: User can manually input the correct settings.
- **Access Mode:** The options are CHS/LBA/Large/Auto
- **Capacity:** Capacity of currently installed hard disk.
- **Cylinder:** Number of cylinders
- **Head:** Number of heads
- **Precomp:** Write precomp
- **Landing Zone:** Landing zone
- **Sector:** Number of sectors

2.3.4 Drive A / Drive B

This category identifies the types of floppy disk drives installed in the system. The options are: None/360K, 5.25"/1.2M, 5.25"/720K, 3.5"/1.44M, 3.5"/2.88M, 3.5".

2.3.5 Video

This category detects the type of adapter used for the primary system monitor that must match your video display card and monitor.

- **EGA / VGA:** Enhanced Graphics Adapter/Video Graphics Array. For EGA, VGA, SVGA, or PGA monitor adapters.
- **CGA 40:** Color Graphics Adapter, power up in 40 column mode.
- **CGA 80:** Color Graphics Adapter, power up in 80 column mode.
- **MONO:** Monochrome adapter, includes high resolution monochrome adapters.

2.3.6 Halt On

This category determines whether system start-up will halt or not when an error is detected during power up. The options are: No Errors/All Errors/All, But Keyboard/All, But Diskette/All, But Disk/Key.

2.3.7 Memory

This category displays base memory, extended memory, and total memory detected during POST (Power On Self Test).

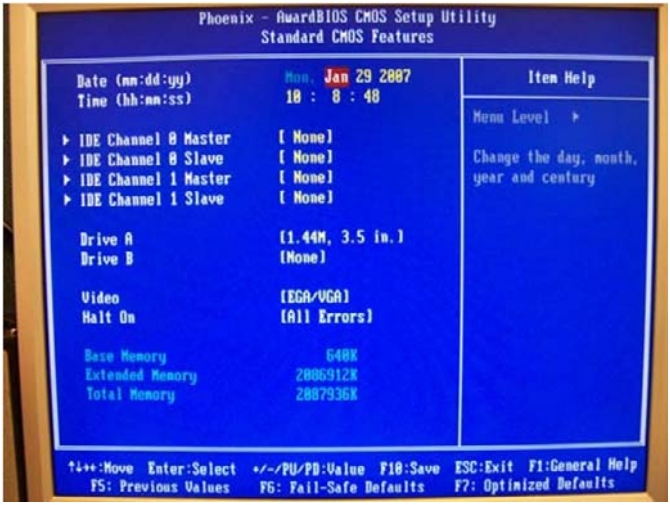

Figure 2.2: Standard CMOS Features Screen

2.4 Advanced BIOS Features

The “Advanced BIOS Features” screen appears when choosing the “Advanced BIOS Features°” item from the “Initial Setup Screen” menu. It allows the user to configure the AIMB-763VG or AIMB-763G2 according to his particular requirements. Below are some major items that are provided in the Advanced BIOS Features screen. A quick booting function is provided for your convenience. Simply enable the Quick Booting item to save yourself valuable time.



Figure 2.3: Advanced BIOS features screen

2.4.1 CPU Features

Delay Prior to thermal

This feature controls the activation of the Thermal Monitor's automatic mode. It allows you to determine when the Pentium 4's Thermal Monitor should be activated in automatic mode after the system boots. For example, with the default value of 16 Minutes, the BIOS activates the Thermal Monitor in automatic mode 16 minutes after the system starts booting up. The choices are 4 Min, 8 Min, 16 Min, and 32 Min.

Limit CPUID MaxVal

Set Limit CPUID MaxVa1 to 3. This should be disabled for WinXP.

Execute Disable Bit

When disabled, forces the XD feature flag to always return 0.

2.4.2 Hard Disk Boot Priority

Set hard disk boot device priority.

2.4.3 Virus Warning

Enables or disables the virus warning.

2.4.4 CPU L1 & L2 Cache

Enabling this feature speeds up memory access. The commands are “Enabled” or “Disabled”.

2.4.5 Hyper-Threading Technology

While using a CPU with Hyper-Threading technology, you can select “Enabled” to enable Hyper-Threading Technology in an OS which supports Hyper-Threading Technology or select “Disabled” for other OSs which do not support Hyper-Threading technology.

2.4.6 Quick Power On Self Test

This allows the system to skip certain tests to speed up the boot-up procedure.

2.4.7 First/Second/Third Boot Device

The BIOS tries to load the OS from the devices in the sequence set here. The options are: “Floppy”, “LS120”, “HDD-0”, “SCSI”, “CDROM”, “HDD-1”, “HDD-2”, “HDD-3”, “ZIP100”, “USB-FDD”, “USB-ZIP”, “USBCDROM”, “USB-HDD”, “LAN”, and “Disabled”.

2.4.8 Boot Other Device

Use this to boot another device. The options are “Enabled” and “Disabled”.

2.4.9 Swap Floppy Drive

If the system has two floppy drives, choose “Enabled” to assign physical drive B to logical drive A and vice-versa. The commands are “Enabled” or “Disabled”.

2.4.10 Boot Up Floppy Seek

Selection of the command “Disabled” will speed the boot up. Selection of “Enabled” searches disk drives during boot up.

2.4.11 Boot Up NumLock Status

Sets the boot up status Num Lock. The options are “On” and “Off”.

2.4.12 Gate A20 Option

"Normal": A pin in the keyboard controller controls GateA20. Fast (Default) lets chipset control GateA20.

2.4.13 Typematic Rate Setting

The typematic rate is the rate key strokes repeat as determined by the keyboard controller. The commands are "Enabled" or "Disabled". Enabling allows the typematic rate and delay to be selected.

2.4.14 Typematic Rate (Chars/Sec)

The BIOS accepts the following input values (characters/second) for typematic rate: 6, 8, 10, 12, 15, 20, 24, and 30.

2.4.15 Typematic Delay (msec)

Typematic delay is the time interval between the appearances of two consecutive characters, when the key is continuously depressed. The input values for this category are: 250, 500, 750, and 1000 (ms).

2.4.16 Security Option

This category determines whether the password is required when the system boots up or only when entering setup. The options are:

- **System:** The system will not boot, and access to Setup will be also denied unless the correct password is entered at the prompt.
- **Setup:** The system will boot, but access to Setup will be denied unless the correct password is entered at the prompt.

Notes

To disable security, select PASSWORD SET- TING in the main menu. Then, you will be asked to enter a password. Simply press <Enter> to disable security. When security is disabled, the system will boot and you can enter Setup freely.

2.4.17 APIC Mode

This setting allows you to enable the APIC mode. The choices are "Disabled" or "Enabled".

2.5 Advanced Chipset Features

By choosing the “Advanced Chipset Features” option from the “Initial Setup Screen” menu, the screen below will be displayed. This sample screen contains the manufacturer’s default values for the AIMB-763VG and AIMB-763G2, as shown in Figure 2-4:

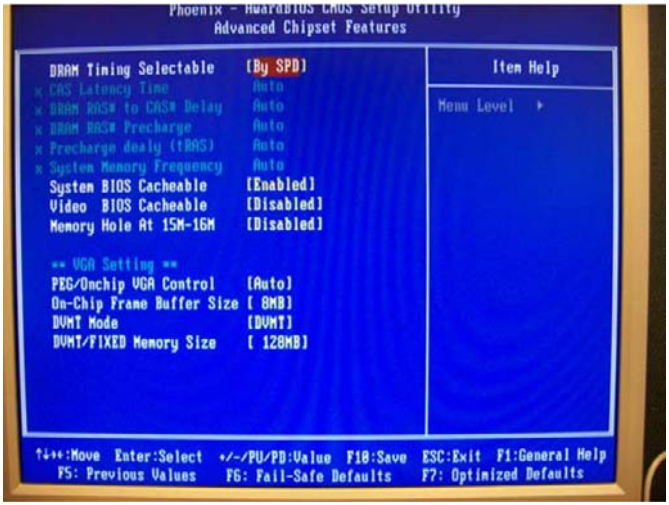

Figure 2.4: Advanced chipset features screen

Notes

DRAM default timings have been carefully chosen and should ONLY be changed if data is being lost. Please first contact technical sup- port.

2.5.1 DRAM Timing Selectable

This item allows you to control the DRAM speed. The selections are “Manual” or “By SPD”.

2.5.2 CAS Latency Time

When DRAM Timing Selectable is set to [Manual], this field is adjustable. This controls the CAS latency, which determines the time interval between SDRAM starting a read command and receiving it. The options are [3T], [4T], [5T], and [Auto].

2.5.3 DRAM RAS# to CAS# Delay

When DRAM Timing selectable is set to [Manual], this field is adjustable. When DRAM is refreshed, the rows and columns are addressed separately. This setup item allows user to determine the timing of the transition from RAS (row address strobe) to CAS (column address strobe). The less the clock cycles are, the faster the DRAM speed is. Setting options are [2T] to [5T], and [Auto].

2.5.4 DRAM RAS# Precharge

When the DRAM Timing Selectable is set to [Manual], this field is adjustable. This setting controls the number of cycles for Row Address Strobe (RAS) to be allowed to precharge. If no sufficient time is allowed for the RAS to accumulate its charge before DRAM refresh, refreshing may be incomplete and DRAM may fail to retain data. This item applies only when synchronous DRAM is installed in the system. Setting options are [2T] to [5T], and [Auto].

2.5.5 Precharge Delay (t RAS)

This item allows you to select the value in this field, depending on whether the board has paged DRAMs or EDO (extended data output) DRAMs. The choices are: “4” to “15” and “Auto”.

2.5.6 System Memory Frequency

To adjust the frequency of memory. The choices are: “333MHz”, “400MHz”, “533MHz” and “Auto”.

2.5.7 System BIOS Cacheable

Selecting “Enabled” allows caching of the system BIOS ROM at F0000h-FFFFFh, resulting in better system performance. However, if any program writes data to this memory area, a system error may occur. The Choices are “Enabled”, and “Disabled”.

2.5.8 Video BIOS Cacheable

Selecting “Enabled” allows caching of the video BIOS, resulting in better system performance. However, if any program writes to this memory area, a system error may occur. The choices are “Enabled”, and “Disabled”.

2.5.9 Memory Hole At 15M-16M

Enabling this feature reserves 15 MB to 16 MB memory address space for ISA expansion cards that specifically require this setting. This makes memory from 15 MB and up unavailable to the system. Expansion cards can only access memory up to 16 MB. The default setting is “Disabled”.

2.5.10 PEG/Onchip VGA Control

The selections are “Auto”, “Onchip VGA” or “PEG Port”.

2.5.11 On-Chip Frame Buffer Size

The On-Chip Frame Buffer Size can be set to 1 MB or 8 MB. This memory is shared with the system memory.

2.5.12 DVMT Mode

Use this field to select the memory to allocate for video memory. The choices are “Fixed”, “DVMT” and “BOTH”.

2.5.13 DVMT/Fixed Memory Size

Specify the size of DVMT/system memory to allocate for video memory.

2.6 Integrated Peripherals



Figure 2.5: Integrated peripherals

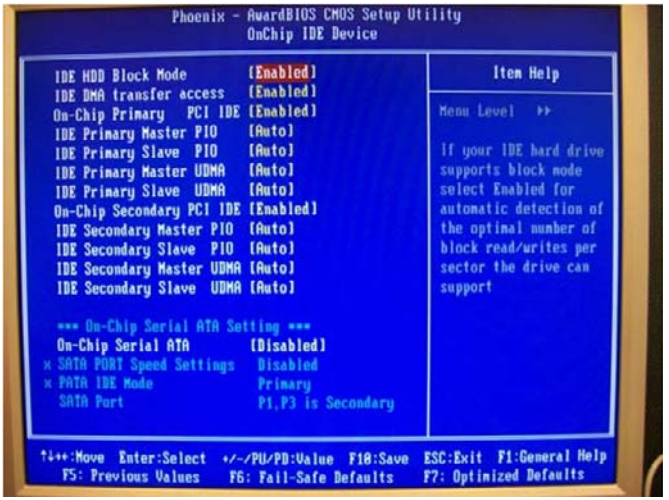

Figure 2.6: On-Chip IDE Device

2.6.1 IDE HDD Block Mode

If your IDE hard drive supports block mode select Enabled for automatic detection of the optimal number of block read/writes per sector the drive can support.

2.6.2 IDE DMA Transfer Access

Use this field to enable or disable IDE DMA transfer access.

2.6.3 On-Chip IDE Device

IDE Primary Master/Slave PIO/UDMA Mode (Auto). The channel has both a master and a slave, making four IDE devices possible. Because two IDE devices may have a different Mode timing (0, 1, 2, 3, 4), it is necessary for these to be independent. The default setting “Auto” will allow auto detection to ensure optimal performance.

2.6.4 On-Chip Serial ATA

Choose the status of serial ATA. The default setting is “Auto” which lets the system arrange all parallel and serial ATA resources automatically. The “Disabled” setting disables the SATA controller. The “Combined Mode” combines PATA and SATA, and maximum of 2 IDE drives in each channel. The “Enhanced Mode” enables both SATA and PATA, and a maximum of 6 IDE drives are supported. The “SATA Only” setting means SATA is operating in legacy mode.

2.6.5 SATA PORT Speed Settings

This item allows you to select the SATA port. The choices are “Disabled”, “Fore GenI” and “Fore GenII”.

2.6.6 PATA IDE Mode

This item allows you to select the parallel ATA channel. Setting options are Primary and Secondary.

2.6.7 SATA Port

This feature allows users to view the SATA port as primary or secondary channel. If PATA IDE Mode is set to “Primary”, it will display “P1, P3 Secondary” which means that SATA1 and SATA3 are secondary. If PATA IDE Mode is set to “Secondary”, it will display “P0, P2 Secondary” which means that SATA0 and SATA2 are secondary.



Figure 2.7: Onboard Device

2.6.8 USB Controller

Select Enabled if your system contains a Universal Serial Bus (USB) controller and you have USB peripherals. The choices are “Enabled” and “Disabled”.

2.6.9 USB 2.0 Controller

This entry is to disable/enable the USB 2.0 controller only. The BIOS itself may/may not have high-speed USB support. If the BIOS has high speed USB support built in, the support will automatically turn on when a high speed device is attached. The choices are “Enabled” or “Disabled”.

2.6.10 USB Keyboard Support

Select Enabled if you plan to use an USB keyboard. The choices are “Enabled” and “Disabled”.

2.6.11 Azalia/AC97 Audio Select

Select “Disable” if you do not want to use Azalia/AC-97 audio. Options are “Auto”, and “Disabled”.

2.6.12 Onboard LAN1 Control

Options are “Enabled” and “Disabled”. Select “Disabled” if you don’t want to use onboard LAN controller1.

2.6.13 Onboard LAN2 Control

Options are “Enabled” and “Disabled”. Select Disabled if you don’t want to use the onboard LAN controller2.

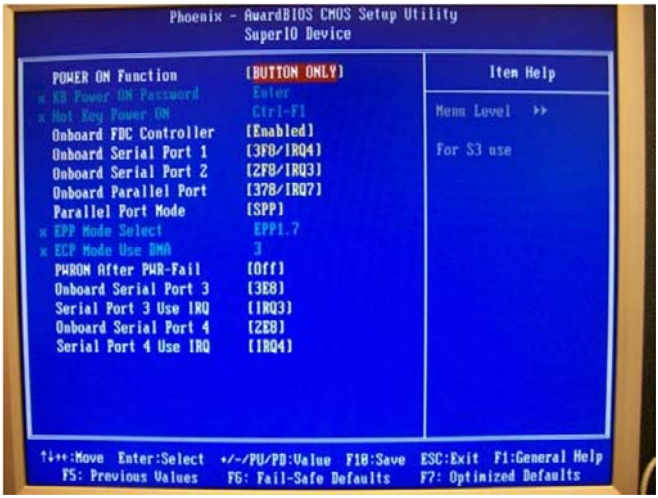

Figure 2.8: Super I/O Device

2.6.14 POWER ON Function

This feature allows you to wake up the system using any of the listed options. The selections are “Hot KEY”, “Mouse Left”, “Mouse Right”, “Any KEY” and “BUTTON ONLY”.

2.6.15 Hot Key Power On

Awaken the system by pressing the hot key button. The choices are “Ctrl-F1”, “Ctrl- F2”, “Ctrl-F3” to “Ctrl-F8”.

2.6.16 Onboard FDC Controller

When enabled, this field allows you to connect your floppy disk drives to the onboard floppy disk drive connector instead of a separate controller card. If you want to use a different controller card to connect the floppy disk drives, set this field to Disabled.

2.6.17 Onboard Serial Port 1

The settings are “3F8/IRQ4”, “2F8/IRQ3”, “3E8/IRQ4”, “2E8/IRQ3”, and “Disabled” for the on-board serial connector.

2.6.18 Onboard Serial Port 2

The settings are “3F8/IRQ4”, “2F8/IRQ3”, “3E8/IRQ4”, “2E8/IRQ3”, and “Disabled” for the on-board serial connector.

2.6.19 Onboard Parallel Port

This field sets the address of the on-board parallel port connector. You can select “378/IRQ7”, “278/IRQ5”, “3BC/IRQ7”, or “Disabled”. If you install an I/O card with a parallel port, make sure there is no conflict in the address assignments. The single board computer can support up to three parallel ports.

2.6.20 Parallel Port Mode

This field allows you to set the operation mode of the parallel port. The setting “Normal” allows normal speed operation, but in one direction only. “EPP” allows bidirectional parallel port operation at maximum speed. “ECP” allows the parallel port to operate in bidirectional mode and at a speed faster than the maximum data transfer rate. “ECP + EPP” allows normal speed operation in a two-way mode.

2.6.21 EPP Mode Select

This field allows you to select EPP port type 1.7 or 1.9. The choices are “EPP1.9” and “EPP1.7”.

2.6.22 ECP Mode Use DMA

This selection is available only if you select “ECP” or “ECP + EPP” in the Parallel Port Mode field. In ECP Mode, you can select DMA channel 1 or DMA channel 3. Leave this field on the default setting.

2.6.23 PWRON After PWR-Fail

Use this to set up the system after power failure. The “Off” setting keeps the system powered off after power failure, the “On” setting boots up the system after failure, and the “Former-Sts” returns the system to the status before power failure.

2.6.24 Onboard Serial Port 3/4

The settings are “3E8” and “2E8” for the on-board serial connector.

2.6.25 Serial Port 3/4 use IRQ

The settings are “IRQ3”, “IRQ4”, “IRQ5”, “IRQ7”, “IRQ10” and “IRQ11”.

2.7 Power Management Setup

The power management setup controls the single board computer's "green" features to save power. The following screen shows the manufacturer's defaults.



Figure 2.9: Power management setup screen (1)



Figure 2.10: Power management setup screen (2)

2.7.1 PCI Express PM Function

This filed allows you to enable or disable system wake up by PCI Express PME (Power Management Event).

2.7.2 ACPI Function

The choices are “Enabled” and “Disabled”.

2.7.3 ACPI Suspend Type

This item allows you to set ACPI suspend type to S1/POS(Power On Suspend) or S3/STR(Suspend To RAM).

2.7.4 Run VGABIOS if S3 Resume

Select “Auto” to run VGA BIOS if S3 resume automatically. The “Yes” enables running VGA BIOS if S3 resume. The “No” disables this function.

2.7.5 Power Management

This category allows you to select the type (or degree) of power saving and is directly related to the following modes:

- HDD Power Down
- Suspend Mode

There are three selections for Power Management, and they have fixed mode settings.

Table 2.1: Power Saving

Saving Mode	Function
Min Saving	Minimum power management., Suspend Mode = 1 hr., and HDD Power Down = 15 min.
Max Saving	Maximum power management., Suspend Mode = 1 min., and HDD Power Down = 1 min.
User Defined (Default)	Allows you to set each mode individually. When not disabled, each of the ranges are from 1 min. to 1 hr. except for HDD Power Down which ranges from 1 min. to 15 min., and disabled.

2.7.6 Video Off Method

Use this to select the method to turn off the video. The choices are “Blank Screen”, “V/H SYNC+ Blank”, and “DPMS”.

2.7.7 Video Off In Suspend

When the system is in suspend mode, the video will turn off. The choices are “No” and “Yes”.

2.7.8 Suspend Type

The choices are “Stop Grant” and “PwrOn Suspend”.

2.7.9 Suspend Mode

Please refer to 2.7.5.

2.7.10 HDD Power Down

Select “1-15 mins” to enable HDD Power Down mode between 1 to 15 mins. Select “Disabled” to disable HDD Power Down function.

2.7.11 Soft-Off by PWR-BTTN

If you choose “Instant-Off”, then pushing the ATX soft power switch button once will switch the system to “system off” power mode. You can choose “Delay 4 sec”. If you do, then pushing the button for more than 4 seconds will turn off the system, whereas pushing the button momentarily (for less than 4 seconds) will switch the system to “suspend” mode.

2.7.12 Wake-Up by PCI card

The choices are “Enabled” and “Disabled”.

2.7.13 PowerOn by Ring

Select “Enabled” to power on the system from a soft off state by an input signal on the serial Ring Indicator (RI) line. The choices are “Enabled” and “Disabled”.

2.7.14 USB KB Wake-Up From S3

When “Enabled”, enter any key to wake up the system from S3 state. The choices are “Enabled” and “Disabled”.

2.7.15 Resume by Alarm

When “Enabled”, set the date and time at which the RTC (real-time clock) alarm awakens the system from suspend mode. The choices are “Enabled” and “Disabled”.

2.7.16 Primary IDE 0 (1) and Secondary IDE 0 (1)

When Enabled, the system will resume from suspend mode if Primary IDE 0 (1) or Secondary IDE 0 (1) becomes active. The choices are “Enabled” and “Disabled”.

2.7.17 FDD, COM, LPT PORT

When Enabled, the system will resume from suspend mode if the FDD, interface, COM port, or LPT port is active. The choices are “Enabled” and “Disabled”.

2.7.18 PCI PIRQ [A-D]#

When Enabled, the system resumes from suspend mode if an interrupt occurs. The choices are “Enabled” and “Disabled”.

2.8 PnP/PCI Configurations



Figure 2.11: PnP/PCI configurations screen

2.8.1 Init Display First

This item allows you to choose the first display interface to initiate while booting. The choice is “PCI Slot” or “Onboard”.

2.8.2 Reset Configuration Data

The default is “Disabled”. Select Enabled to reset Extended System Configuration Data (ESCD) if you have installed a new add-on card, and system configuration is in such a state that the OS cannot boot.

2.8.3 Resources Controlled By

The commands here are “Auto(ESCD)” or “Manual”. Choosing “Manual” requires you to choose resources from the following sub-menu. “Auto(ESCD)” automatically configures all of the boot and Plug and Play devices, but you must be using Windows 95 or above.

2.8.4 PCI/VGA Palette Snoop

This is set to “Disabled” by default.

2.8.5 Maximum Payload Size

This allows you to set the maximum TLP payload size for PCI Express devices. The options are [128 bytes], [256 bytes], [512 bytes], [1024 bytes], [2048 bytes], and [4096 bytes].

2.9 PC Health Status

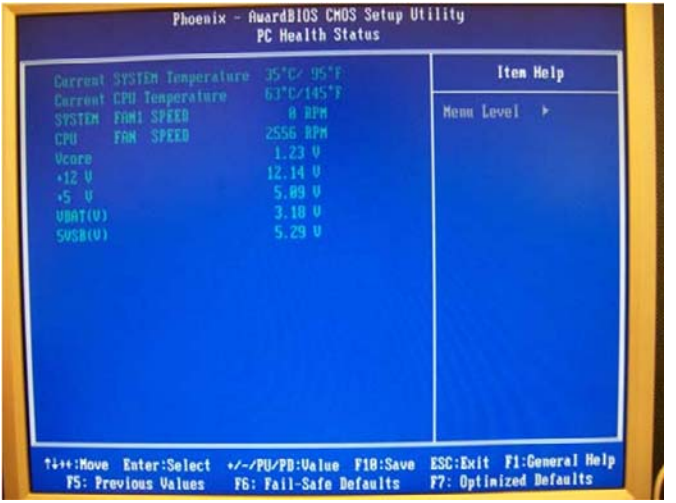

Figure 2.12: PC Health Status Screen

2.9.1 Current System Temperature

This shows you the current temperature of system.

2.9.2 Current CPU Temperature

This shows the current CPU temperature.

2.9.3 SYSTEM FAN1 Speed

This shows the current System FAN operating speed.

2.9.4 CPU FAN Speed

This shows the current CPU FAN operating speed.

2.9.5 VCORE and Other Voltages

This shows the voltage of VCORE, +5V, +12V, VBAT(V), and 5VSB(V).

2.10 Frequency / Voltage Control

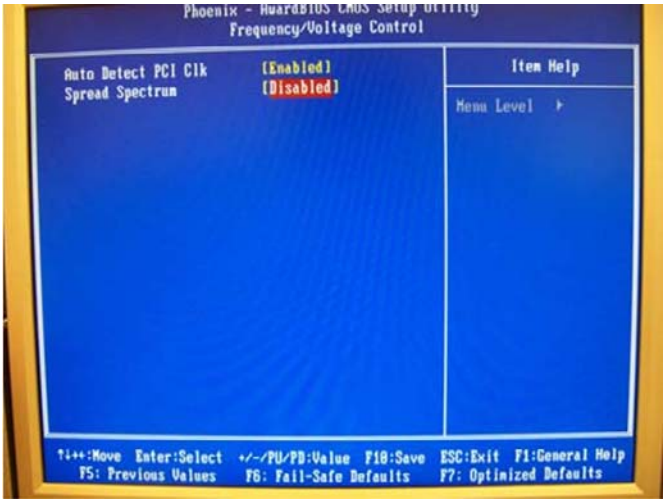

Figure 2.13: Spread Spectrum Control screen

2.10.1 Auto Detect PCI Clk

This allows you to enable or disable auto detect PCI clock. The choices are “Enabled”and “Disabled”.

2.10.2 Spread Spectrum

This setting allows you to reduce EMI by modulating the signals the CPU generates so that the spikes are reduced to flatter curves. This is achieved by varying the frequency slightly so that the signal does not use any particular frequency for more than a moment. The choices are “Disabled” and “Enabled”.

2.11 Password Setting

Follow these steps to change the password.

1. Choose the “Set Password” option from the “Initial Setup Screen” menu and press <Enter>. The screen displays the following message:

Please Enter Your Password

2. Press <Enter>.
3. If the CMOS is good and this option has been used to change the default password, the user is asked for the password stored in the CMOS. The screen displays the following message:

Please Confirm Your Password

4. Type the current password and press <Enter>.
5. After pressing <Enter> (ROM password) or the current password (user-defined), you can change the password stored in the CMOS. The password must be no longer than eight (8) characters. Remember, to enable the password setting feature, you must first select either “Setup” or “System” from the ”Advanced BIOS Features” menu.

2.12 Save & Exit Setup

If you select this and press <Enter>, the values entered in the setup utilities will be recorded in the CMOS memory of the chipset. The processor will check this every time you turn your system on and compare this to what it finds as it checks the system. This record is required for the system to operate.

2.13 Exit Without Saving

Selecting this option and pressing <Enter> lets you exit the setup program without recording any new values or changing old ones.

APPENDIX A

Specifications

Appendix A Specifications

A.1 AIMB-763G2 specifications summary

Table A.1: AIMB-763G2 specifications summary

CPU	LGA775 socket for Intel® Pentium® D / Pentium® 4 / Celeron® / Core™ 2 Duo processor Compatible with the Intel® 05B/05A and 04B/04A processors Supports Intel® Enhanced Memory 64 Technology (EM64T) Supports Enhanced Intel® SpeedStep® Technology (EIST) Supports Intel® Hyper-Threading Technology
Chipset	Northbridge: Intel® 945G Southbridge: Intel® ICH7
Front Side Bus	1066/800/533 MHz
Memory	4 x 240-pin DIMM sockets support up to 4GB of Dual Channel DDR2 400/533/667 MHz SDRAM
Integrated Graphics	Integrated Intel® Graphics Media Accelerator 950
Expansion slots	1 x PCI Express x 16 slot for discrete graphics cards 1 x PCI Express x 1 5 x PCI slots
Storage	Intel(R) ICH7 South Bridge supports: - 1 x Ultra DMA 100/66/33 - 4 x Serial ATA 3Gb/s ports
Audio	Realtek® ALC888 8-channel High-Definition aduio CODEC S/PDIF out interface support Universal Audio Jack (UAJ (R)) Sensing Technology support
LAN	Intel® 82573L Gigabit LAN controller
USB	Supports up to 8 USB 2.0 ports

Table A.1: AIMB-763G2 specifications summary	
Rear panel	1 x Parallel port 1 x LAN (RJ-45) port 4 x USB 2.0 ports 1 x Serial port (COM) 1 x VGA port 1 x PS/2 keyboard port 1 x PS/2 mouse port 1 x Audio I/O
BIOS features	4 Mb Flash ROM, AMI BIOS, PnP, WfM2.0, DMI2.0, SM BIOS 2.3
Industry standard	PCI 2.2, USB 2.0
Manageability	WfM 2.0, DMI 2.0, WOL by PME, WOR by PME, Chassis Intrusion
Internal connectors	2 x USB 2.0 connectors for 4 additional USB 2.0 ports 1 x CPU fan connector 1 x Chassis fan connector 1 x Power fan connector 1 x 24-pin ATX power connector 1 x 4-pin ATX 12 V power connector 1 x CD in connector 1 x Front panel high-definition audio connector 1 x S/PDIF out connector 1 x TPM connector 3 x COM port (COM2/COM3/COM4) 1 x 3-pin Power LED connector (PLED)
Power Requirement	ATX power supply (with 20-pin and 4-pin 12 V plugs)
Form Factor	ATX form factor: 12 in x 9.6 in (304.8 mm x 243.84 mm)
Support CD contents	Device drivers

**Specifications are subject to change without notice.*

A.2 AIMB-763VG specifications summary

Table A.2: AIMB-763VG specifications summary	
CPU	LGA775 socket for Intel® Pentium® D / Pentium® 4 / Celeron® / Core™ 2 Duo processor Compatible with the Intel® 05B/05A and 04B/04A processors Supports Intel® Enhanced Memory 64 Technology (EM64T) Supports Enhanced Intel® SpeedStep® Technology (EIST) Supports Intel® Hyper-Threading Technology
Chipset	Northbridge: Intel® 945G Southbridge: Intel® ICH7
Front Side Bus	1066/800/533 MHz
Memory	4 x 240-pin DIMM sockets support up to 4GB Dual Channel DDR2 400/533/667 MHz SDRAM
Integrated Graphics	Integrated Intel® Graphics Media Accelerator 950
Expansion slots	1 x PCI Express x 16 slot for discrete graphics cards 1 x PCI Express x 1 5 x PCI slots
Storage	Intel(R) ICH7 South Bridge supports: - 1 x Ultra DMA 100/66/33 - 4 x Serial ATA 3Gb/s ports
Audio	Realtek® ALC888 8-channel High-Definition aduio CODEC S/PDIF out interface support Universal Audio Jack (UAJ (R)) Sensing Technology support
LAN	Intel® 82573L Gigabit LAN controller
USB	Supports up to 8 USB 2.0 ports
Rear panel	1 x Parallel port 1 x LAN (RJ-45) port 4 x USB 2.0 ports 1 x Serial port (COM) 1 x VGA port 1 x PS/2 keyboard port 1 x PS/2 mouse port 1 x Audio I/O

Table A.2: AIMB-763VG specifications summary	
BIOS features	4 Mb Flash ROM, AMI BIOS, PnP, WfM2.0, DMI2.0, SM BIOS 2.3
Industry standard	PCI 2.2, USB 2.0
Manageability	WfM 2.0, DMI 2.0, WOL by PME, WOR by PME, Chassis Intrusion
Internal connectors	2 x USB 2.0 connectors for 4 additional USB 2.0 ports 1 x CPU fan connector 1 x Chassis fan connector 1 x Power fan connector 1 x 24-pin ATX power connector 1 x 4-pin ATX 12 V power connector 1 x CD in connector 1 x Front panel high-definition audio connector 1 x S/PDIF out connector 1 x TPM connector 1 x COM port (COM2) 1 x 3-pin Power LED connector (PLED)
Power Requirement	ATX power supply (with 20-pin and 4-pin 12 V plugs)
Form Factor	ATX form factor: 12 in x 9.6 in (304.8 mm x 243.84 mm)
Support CD contents	Device drivers

**Specifications are subject to change without notice.*