ARK-3403

Intel® Atom™ D510/D525 Fanless Embedded Box PC with PCI/PCIe Expansion and Dual SATA HDDs



Features

- Intel® Atom™ D510/D525 dual core up to 1.8 GHz Fanless Embedded Box PC
- Supports VGA and LVDS dual display and support for widescreens with high resolution
- Supports 2 GbE, eSATA, 6 USB 2.0, audio and 4 COM ports
- Two internal 2.5" SATA HDD drive bays
- Supports 2 x Mini PCIe, 2 x PCI/PCIe expansion interfaces for diverse applications
- Easy integration, easy maintenance, and wide input voltage range
- Supports SUSIAccess and Embedded Software APIs
- IP40

Specifications

Processor System	CPU	Intel Atom D510 processor	Intel Atom D525 processor
	Max. speed	1.66 GHz	1.8 GHz
	System Chipset	Intel ICH8-M	
	BIOS	AMI 16 Mbit SPI BIOS	
Memory	Technology	DDR2 667 MHz	
	Max. Capacity	2 GB	
	Socket	1 x 200-pin SO-DIMM	
Graphics	Chipset	Intel 3.5 Gen Integrated Graphic Engine + GFX core	
	Interface	VGA: up to 1920 x 1200 18-bit LVDS interface(Optional)	
Ethernet	LAN 1	10/100/1000 Mbps Intel 82567V Ethernet controller, support Wake on LAN	
	LAN 2	10/100/1000 Mbps Intel 82583V Ethernet controller, support Wake on LAN	
Audio	Amplifier	-	
	Interface	Line-out, Mic-in, Line-in	
IO interface	Serial Interface	4 COM, 2 x RS-232 and 2 x RS-232/422/485 port , RS-485 w/auto flow control, 2 extra RS-232 ports (optional)	
	USB Interface	6 x USB ports, Compliant with USB 2.0	
	Parallel Port	Supports D-sub 25-pin connector (optional)	
	Digital I/O	Support 16-bit digital IO (optional)	
Other	Thermal Alarm	Yellow LED lighting	
	Watchdog Timer	255-level timer interval, setup by software	
Expansion	PCI/PCIe Slot	1 Slot PCI and 1 Slot PCIe x1 (default); 2 Slots PCIe x1 (optional); 2 Slots PCI (optional) Supports maximum dimension of 167 mm (width) x 106 mm (length) for expansion PC board	
	Mini PCI/Mini PCIe	2 x Mini PCIe	
Storage	HDD	Supports drive bay space for 2 x SATA 2.5" HDD (9.5 mm height only)	
	SSD	Supports CompactFlash socket for type I/II CompactFlash disk	
Software Support	Microsoft Windows	Windows 7, XP Professional, XP Embedded, WinCE 6.0	
	Linux	Fedora 12	
Power Requirement	Power Type	AT/ATX	
	Power Input Voltage	12 V_{DC} ~ 24 V_{DC}	
	Minimum Power Input	12 V_{DC} ~ V_{DC} @ 4.6 A ~ 2.4 A	
	Power Adapter	AC to DC, DC19V/7.89A, 150W(Optional)	
Power Consumption	Typical	13 W (with Intel Atom D510 1.66 GHz and w/o expansion)	
	Max.	15 W (with Intel Atom D510 1.66 GHz and w/o expansion)	
Mechanical	Construction	Aluminum housing	
	Mounting	Desk/wall-mounting	
	Dimensions (W x H x D)	220 mm x 102.5 mm x 200 mm (8.66" x 4.04" x 7.87")	
	Weight	4 kg (8.8 lb)	
Environment	Operating Temperature	With extended temperature peripherals CompactFlash disk: -10 ~ 55° C With extended temperature peripherals 2.5-inch hard disk -10 to 45° C, with air flow	
	Storage Temperature	-40 ~ 85° C (-40 ~ 185°F)	
	Relative Humidity	95% @ 40° C (non-condensing)	
	Vibration Loading During Operation	With CompactFlash disk: 5 Grms, IEC 60068-2-64, random, 5 ~ 500 Hz, 1 Oct./min, 1 hr/axis. With 2.5-inch hard disk: 1 Grms, IEC 60068-2-64, random, 5 ~ 500 Hz, 1 Oct./min, 1 hr/axis.	
	Shock During Operation	With CompactFlash disk: 50 G, IEC 60068-2-27, half sine, 11 ms duration With hard disk: 20 G, IEC 60068-2-27, half sine, 11 ms duration	
	EMC	CE/FCC Class A, CCC, BSMI	
	Safety Certifications	UL, CCC, BSMI	

All product specifications are subject to change without notice

Last updated : 8-May-2014

Dimensions

Unit: mm

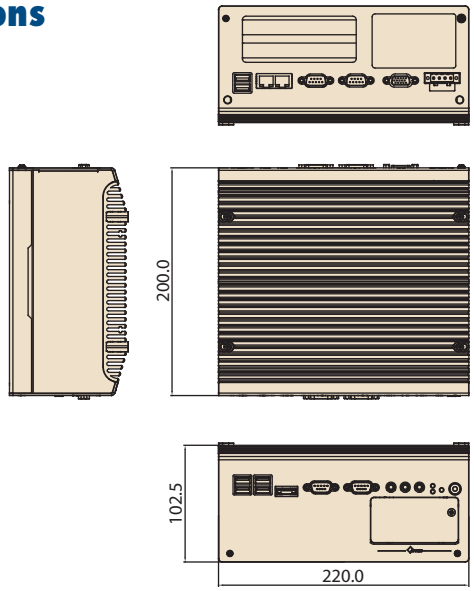

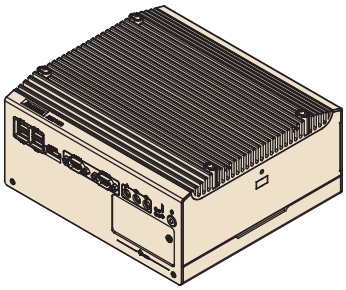

Front Panel External I/O Mechanical Layout/Drawing

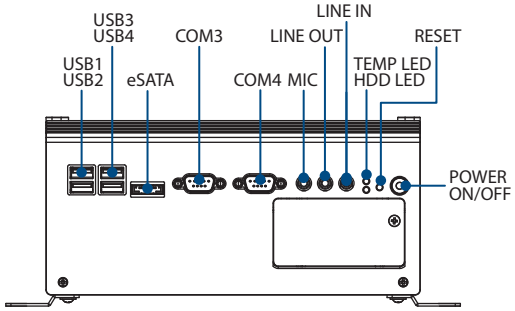

Rear Panel External I/O Mechanical Layout/Drawing

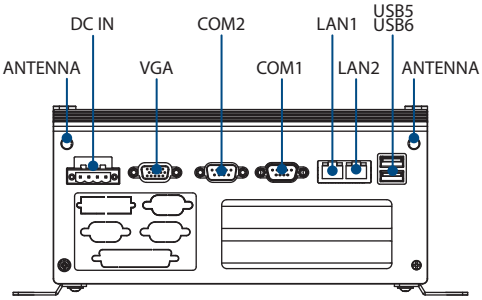

Packing List

Part Number	Description
-	1 x ARK-3403 unit
-	1 x Driver/Utility CD/Manual
1960014487T00C	2 x desk/wall mount plate
1652003234	1 x 4-pin phoenix DC power connector

Ordering Information

Part Number	Description
ARK-3403-D5A1E	Intel Atom D510 1.66 GHz, w/VGA, 2 x Giga LAN, 6 x USB 2.0, 4 x COM, 2 Mini PCIe, Audio
ARK-3403-D6A1E	Intel Atom D525 1.8 GHz, w/VGA, 2 x GLAN, 6 x USB2.0 4 x COM, 2 Mini PCIe, audio

Optional Items

Part Number	Description
1757002161	AC-to-DC adapter, DC19 V/7.89A 150 W, with phoenix power plug, 0 ~ 40° C for home and office use
1702002600	Power cable 3-pin 180 cm, USA type
1702002605	Power cable 3-pin 180 cm, EU type
1702031801	Power cable 3-pin 180 cm, UK type
1700008871	COM Cable D-SUB 9P(M)/IDE#2 10P-2.0 20 cm
1700018187	LPT cable 2 x 13p-2.0/D-SUB 25P(F) 20 cm
1700018490	LVDS cable
1700009407	DIO cable D-SUB 25P(M)/2*10P-1.25 15cm
1700009396	LVDS power cable
AMO-R010E	2 slot riser card, 1 x PCIe x1 + 1 x PCI
AMO-R013E	2 slot riser card, 2 x PCI
AMO-R009E	2 slot riser card, 2 x PCIe x1

Embedded OS

Part Number	Description
2070009923	WinCE 6.0 ARK-3403 ENG
2070009030	XPE WES2009 Luna Pier V4.0 ENG
2070010797	WES7E SPI for ARK-3403 ENG 32 bit