ULI-232DS
ULI-232DSH
ULI-232TC
ULI-232DC
ULI-232DE

BB-9SPOP2
BB-9POP4
BB-232OPDR
BB-232OPDRI
BB-232OPDRI-PH

Industrial-grade, Isolated RS-232 Isolators & Repeaters



Features

- Optical isolation protects RS-232 data and equipment
- Repeaters extend RS-232 data an additional 15 meters
- Data rates up to 230.4 kbps
- 2.0 kV optical isolation on 2 or 3 lines (by model)
- Wide operating temperature range (by model)
- IP30 metal or plastic enclosures options
- In-line, DIN rail, panel mount installation options
- Port or external PSU powering options

Introduction

Advantech rugged isolators and isolated repeaters are ideal for demanding industrial applications. Optical isolation on input and output lines protects RS-232 data and equipment from surges, voltage shorts and ground loops caused by lightning or heavy electrical loads. Model ULI-232DC provides triple isolation on input, output and power lines and is UL Listed, UL C1/D2 rated. Heavy industrial Model ULI-232DE provides triple isolation and is IEC61850-3 and IEEE-1613 rated for electrical substation use.

Specifications

Serial Technology

Model:	Data Rate (max):	RS-232 Connectors:
ULI-232DS*	115.2 kbps	DB9 female (DTE) DB9 male (DCE)
ULI-232DSH	230.4 kbps	DB9 female (DCE) DB9 male (DTE)
ULI-232TC	115.2 kbps	Terminal block
ULI-232DC		DB9 female (DCE) DB9 male (DTE)
ULI-232DE		

LED Indicators

Model:	LED Indicators:
ULI-232DS	–
ULI-232DSH	
ULI-232TC	Data LEDs for each side of isolator. Power LED.
ULI-232DC	Data LEDs for TD, RD, CTS, RTS. Power LED.
ULI-232DE	

Isolation & ESD Protections

Model:	Optical Isolation:	Isolated Lines:	ESD Protection:
ULI-232DS	2.0 kV	Input, Output	8 kV air
ULI-232DSH			
ULI-232TC			
ULI-232DC		Input, Output, Power	
ULI-232DE			15 kV air

RS-232 Signal Range

Model:	Function:	Signal Range:
ULI-232DS	RS-232 isolator	15m
ULI-232DSH		
ULI-232TC	RS-232 repeater	30m
ULI-232DC		
ULI-232DE		

Power

Model:	Source:	Connector:	Input:	Consumption:
ULI-232DS	Port powered. DTE: DTR, RTS DCE: DCD, DSR, CTS	–	5 Vdc	Port powered
ULI-232DSH	External PSU*	2.5mm jack	12 Vdc	731 mW
ULI-232TC		Terminal block	10 to 30 Vdc	1.2 W
ULI-232DC		Terminal block (2-position, removeable, 28-12 AWG wire, 4 kgf/cm torque)	10 to 48 Vdc (56 Vdc, max.)	0.6 W
ULI-232DE		Terminal block (2-position, removeable, 24-21 AWG copper wire only, 5.08 mm pitch, 5 kg/cm torque, ≥500 MΩ @ 500 Vdc insulation resistance		0.55 W (1.5 W, max.)

* External PSU required, not included, sold separately.

Mechanical

Model:	Enclosure:	Dimensions, mm:	Mounting:	Weight, gm
ULI-232DS	Plastic	61 x 33 x 17	In-line	36.3
ULI-232DSH	IP30 plastic	104 x 43 x 20	In-line	54.5
ULI-232TC		95 x 79 x 25	DIN rail, panel option	90.7
ULI-232DC		123 x 113 x 32	DIN rail	195
ULI-232DE	IP30 metal	132 x 93 x 31	Panel, DIN rail option	208.7

Environmental

Model:	Operating Temperature:	Storage Temperature:	Operating Humidity:
ULI-232DS	0 to +70 °C	-55 to +125 °C	0 to 95%, non-condensing
ULI-232DSH		-40 to +85 °C	
ULI-232TC	-40 to +80 °C		
ULI-232DC			
ULI-232DE	-40 to +85 °C		

Meantime Between Failures (MTBF)

- Calculation Method MIL217F Parts Count Reliability Predictio

Model:	Hours:
ULI-232DS	674717
ULI-232DSH	262084
ULI-232TC	244689
ULI-232DC	177250
ULI-232DE	194712

All product specifications are subject to change without notice.
Last updated: 13-Aug-2021

ULI-232DS BB-9SPOP2
ULI-232DSH BB-9POP4
ULI-232TC BB-232OPDR
ULI-232DC BB-232OPDRI
ULI-232DE BB-232OPDRI-PH

Regulatory / Approvals / Certifications

- FCC, CE (all models)

Model:		CE Standards	CE Directives	Other Standards
ULI-232DS	FCC (Part 15, CISPR), UL 508 #E222870	2014/30/EU – Electromagnetic Compatibility Directive (ECD) 2011/65/EU – amended by (EU) 2015/863 Reduction of Hazardous Substances Directive (RoHS) 2012/19/EU – Waste Electrical & Electronic Equipment (WEEE)	EMC: EN 55032 Class B – Electromagnetic Compatibility of Multimedia Equipment – Emission Requirements EN 55024 – Information Technology Equipment – Immunity Characteristics – Limits and Methods of Measurement	EN 55032+ AC – Class A Emissions
ULI-232DSH	UL 508 #E222870			EN 61000-6-1 – Generic Immunity Standard for Residential, Commercial and Light-industrial Environments
ULI-232TC	UL Recognized #E222870, KCC			–
ULI-232DC	UL C1/D2 #E245458, UL 508 #E222870			EN 61000-6-1 – Generic Immunity Standard for Residential, Commercial and Light-industrial Environments
ULI-232DE	UL C1/D2 #E245458, IEC 61850-3, IEEE-1613		EMC: EN 55032 –Class A Electromagnetic Compatibility of Multimedia Equipment – Emission Requirements EN 55024 – Information Technology Equipment – Immunity Characteristics – Limits and Methods of Measurement	EN 55011 + AC – Information Technology Equipment – Class A RF Emissions EN 61000-6-2 – Generic Immunity Standard for (Heavy) Industrial Environments

Dimensions - ULI-232DS

Unit = mm/in

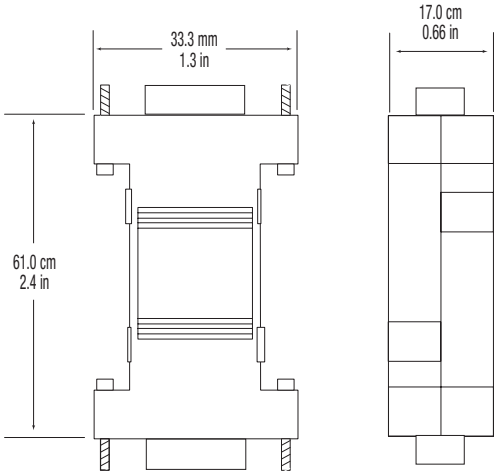

Dimensions - ULI-232TC

Unit = mm

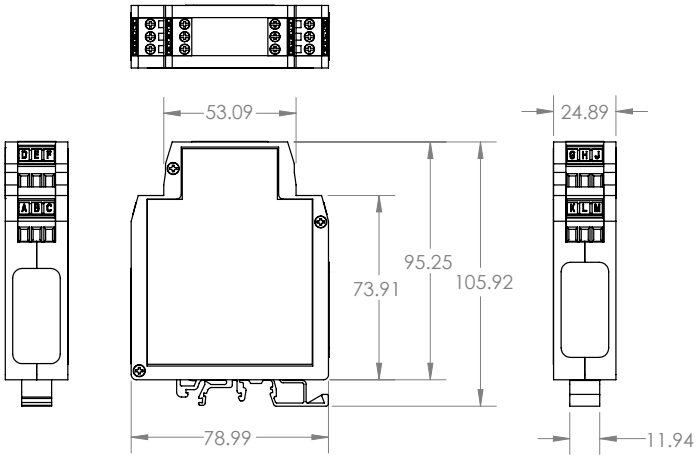

Dimensions - ULI-232DC

Unit = mm/in

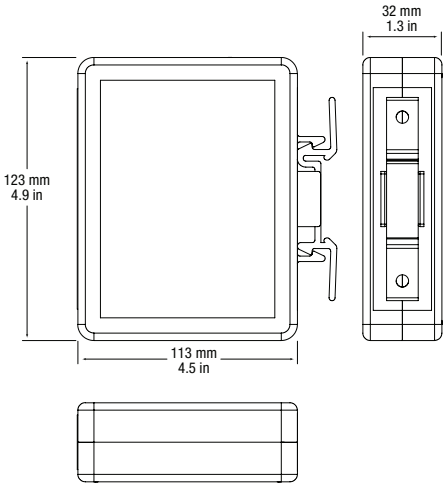

Dimensions - ULI-232DE

Unit = mm

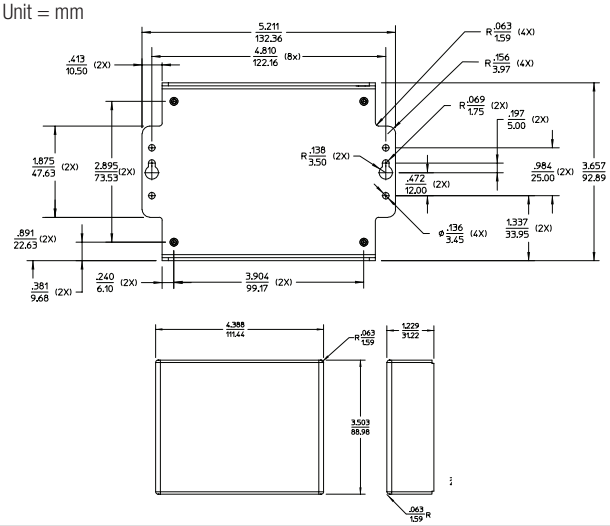

Ordering Information

Model	Part Number to Order	Description
ULI-234DS	BB-9SPOP2	Industrial RS-232 Optical Isolator – 2.0 kV 2-way isolation, 115.2 kbps, port powered.
ULI-234DSH	BB-9SPOP4	Industrial RS-232 Optical Isolator – 2.0 kV 2-way isolation, 230.4 kbps. *PSU not included.*
ULI-234TC	BB-232OPDR	Industrial Isolated RS-232 Repeater – 2.0 kV 2-way isolation, 115.2 kbps, wide operating temp., UL Recognized. *PSU not included.*
ULI-234DC	BB-232OPDRI	Industrial Isolated RS-232 Repeater – 2.0 kV 3-way isolation, 115.2 kbps, wide operating temp., UL C1/D2, UL508. *PSU not included.*
ULI-234DE	BB-232OPDRI-PH	Industrial Isolated RS-232 Repeater – 2.0 kV 3-way isolation, 115.2 kbps, wide operating temp., IEC61850-3, IEEE1613. *PSU not included.*

ULI-232 Series Selection Guide

Industrial Heavy-duty, RS-232 Isolators & Repeaters



Common Features

- Optical isolation protects RS-232 data and equipment
- Repeaters extend RS-232 data an additional 15 meters
- Data rates up to 230.4 kbps
- 2.0 kV optical isolation on 2 or 3 lines (by model)
- Wide operating temperature range (by model)
- IP 30 metal or plastic enclosures options
- In-line, DIN rail, panel mount installation options
- Port or external PSU powering options

Serial Converters Comparison Table

Model Number	ULI-232DS	ULI-232DSH	ULI-232TC	ULI-232DC	ULI-232DE
Part Number to Order	BB-9SPOP2	BB-9POP4	BB-232OPDR	BB-232OPDRI	BB-232OPDRI-PH
Description	RS-232 Isolators		2-way Isolated RS-232 Repeater	Rugged, 3-way Isolated RS-232 Repeater	Hardened, 3-way Isolated RS-232 Repeater
Key Features	Port-powered – no PSU needed	230.4 kbps, suitable for laptops, low-power ports	UL Recognized Component, Terminal block connections	UL C1/D2, UL 508, Oil & Gas applications	UL C1/D2, IEC 61850-3, IEEE-1613, Electrical substation applications
Industrial Rating	Heavy-duty industrial applications				
Isolation	2.0 kV				
Isolated Lines	Input, Output			Input, Output, Power	
ESD Protection	8 kV				15 kV air
Baud Rate, max.	115.2 kbps	230.4 kbps	115.2 kbps		
RS-232 Connectors	DB9 female (DTE) DB9 male (DCE)	DB9 female (DCE) DB9 male (DTE)	Terminal block	DB9 female (DCE) DB9 male (DTE)	
Signal Range, meters	15 m		30 m		
Power Input	5 Vdc	12 Vdc	10 to 30 Vdc	10 to 48 Vdc	
Power Source	Port powered	External PSU (required)			
Power Connector	–	2.5 mm jack	Terminal block		
Operating Temperature	0 to +70 °C		-40 to +80 °C		-40 to +85 °C
Enclosure	Plastic	IP30 plastic		IP30 metal	
Dimensions, mm	61 x 33 x 17 mm	104 x 43 x 20 mm	25 x 79 x 95 mm	123 x 113 x 32 mm	132 x 93 x 33 mm
Mounting Installation	In-line		DIN rail, Panel mount option	DIN rail	Panel mount, DIN rail option
MTBF (MIL217F), hours	674717	262084	244689	177250	194712
Regulatory/Approvals/ Certifications	FCC, CE				
	FCC (Part 15, CISPR), UL 508 #E222870, EN55032 B, EN55024, EN55032+ AC	UL 508 #E222870, EN55032 B, EN55024, EN61000-6-1	UL Recognized #E222870, KCC, EN55032 B, EN55024	**UL C1/D2 #E245458*,** UL 508 #E222870, EN55032 B, EN 55024, EN61000-6-2	**UL C1/D2 #E245458*, IEC61850-3†, IEEE-1613‡,** EN55032/A, EN55024, EN55011/AC, EN61000-6-2

*UL C1/D2 #E245458 †IEC61850-3 ‡IEEE-1613

All product specifications are subject to change without notice.

Last updated: 13-Aug-2021