ULI-224D
ULI-224T
ULI-224TCL

BB-4WSD9R
BB-4WSD9TB
BB-4WSD90TB

Inline, Commercial-grade RS-232 to RS-485 Serial Converters – with port power options



ULI-224D
BB-4WSD9R

ULI-224T
BB-4WSD9TB

ULI-224TCL
BB-4WSD90TB

Features

- Convert RS-232 to RS-485 signals
- Extend RS-232 data signals up to 1.2 km
- Data rate: 115.2 kbps
- 2000V two-way optical isolation (ULI-224TCL)
- Quick, inline installation
- DIP switch selectable RS-422 or RS-485
- RS-232 port-power or 12 Vdc external power (sold separately)
- Isolated model requires 12 Vdc external power (sold separately)

Introduction

Advantech ULI series converters convert RS-232 to RS-422/RS-485 using either port-power or an external power supply. Data is converted in both directions, RS-232 TD is converted to balanced RS-422 or RS-485 TD. Received RS-422/485 signals are converted to RS-232. Automatic Send Data Control eliminates the need for programming hardware handshaking signals to control RS-422 or RS-485 operation. Model ULI-224TCL provides 2000 V optical isolation and requires an external power source.

Specifications

Serial Technology

- **Data Rate** 115.2 kbps, max.
- **RS-232 Connector** All models: DB9 female (DCE)
- **RS-232 Signals** RD, TD, GND
- **RS-422/485 Connector**

ULI-224D	DB9 female
ULI-224T	Terminal block
ULI-224TCL	Terminal block

- **RS-422/485 Signals** TDA(-), TDB(+), RDA(-), RDB(+), GND
- **RS-422/485 Operation** DIP switch selectable RS-422 or RS-485
  RS-485 2-wire or 4-wire, RS-422 4-wire
- **Biasing Resistors** 4.7k Ohms
- **Termination** None
- **Isolation** ULI-224TCL: 2 kV, 2-way optical
- **LEDs** ULI-224TCL: TD, RD

Power

- **Port Power** RS-232 handshake lines
  Pins 7 (RTS) and 8 (CTS) tied together.
  Pins 6 (DSR), 1 (DCD) and 4 (DTR) tied together.

Model:	Connector:	Port Power:	12Vdc External Power (PSU#):
ULI-224D	2.5mm plug, tip+	RS232 handshake	BB-SMI6B-12V-P230C1 (optional)
ULI-224T	2.5mm plug, tip+	RS232 handshake	BB-SMI6B-12V-P230C1 (optional)
ULI-224TCL	Terminal block	–	BB-SMI6B-12-V-ST (required)

Mechanical

- **Enclosure** Plastic
- **Installation** Inline
- **Dimensions**

ULI-224D	7.8 x 4.3 x 2.0 cm
ULI-224T	9.0 x 4.3 x 2.3 cm
ULI-224TCL	9.8 x 4.3 x 2.3 cm

- **Weight**

ULI-224D	0.049 kg (net, without packaging)
ULI-224T	0.05 kg (net, without packaging)
ULI-224TCL	0.05 kg (net, without packaging)

Meantime Between Failures (MTBF)

- **Calculation Method** MIL217F Parts Count Reliability Prediction

ULI-224D	880179 hours
ULI-224T	345242 hours
ULI-224TCL	179604 hours

Environmental

- **Operating Temperature** 0 to +70 °C
- **Storage Temperature** -40 to +85 °C
- **Operating Humidity** 95%, non-condensing

Regulatory / Approvals / Certifications

- **FCC, CE**
- **CE Directives** 2014/30/EU - Electromagnetic Compatibility
  2011/65/EU amended by (EU) 2015/863 Reduction of Hazardous Substances (RoHS)
  2012/19/EU - Waste Electrical and Electronic Equipment
- **CE Standards (EMC)** EN 55032 Class B - Electromagnetic Compatibility of Multimedia Equipment - Emission Requirements
  EN 55024 - Information Technology Equipment - Immunity Characteristics - Limits and Methods of Measurement
- **Other Standards** EN 61000-6-3 + A1 - Generic Emission Standard for Residential, Commercial and Light-industrial Environments (Class B)
  EN 61000-6-1 - Generic Immunity Standard for Residential, Commercial and Light-industrial Environments

Ordering Information

Model	Part Number to Order	Description
ULI-224D	BB-4WSD9R	RS-232 to RS-422/485 Converter – DB9F/DB9F
ULI-224T	BB-4WSD9TB	RS-232 to RS-422/485 Converter – DB9F/TB
ULI-224TCL	BB-4WSD90TB	RS-232 to RS-422/485 Converter – DB9F/TB, 2kV Isolation

Accessories – Sold Separately

- **BB-SMI6B-12V-P230C1** PSU, 12Vdc, 6W, 2.5mm plug, int'l AC input, int'l AC blades
  (*Optional for ULI-224D, ULI-224T*)
- **BB-SMI6B-12-V-ST** PSU, 12Vdc, 0.5A, 8W, stripped/tinned
  (*Required for ULI-224TCL*)

All product specifications are subject to change without notice.
Last updated: 7-Oct-2022

ULI-224TB BB-485BAT3

Battery Powered RS-232 to RS-422/485 Serial Converter



Features

- Change RS-232 TD and RD to RS-485 signals
- Extend RS-232 data signals up to 1.2 km
- Data rates up to 115.2 kbps
- 3 powering options: battery (2) AAA, RS-232 handshake lines, or external power supply (not included, sold separately)
- Quick, easy inline installation
- Automatic Send Data Control – no software drivers necessary

Introduction

With three power options, Model ULI-224TB (BB-485BAT3) is ideal for field service applications. Use battery power with a low-power RS-232 port (laptop), when handshake lines are unavailable, or when a PSU is not possible. The unit draws available power from the RS-232 port getting additional current from the batteries. If you have a full-power port and handshake lines, turn Off the battery switch to use port-powering, saving the batteries for emergencies. (Battery On/Off switch conserves battery life; it does not turn on/off all power.)

Specifications

Serial Technology

- **Data Rate** 115.2 kbps, max.
- **RS-232 Connector** DB9 female (DCE)
- **RS-232 Signals** RD, TD, GND, DCD, DTR, DSR, RTS, CTS
- **RS-232 Port Power** Pins 7 (RTS) and 8 (CTS) tied together. Pins 6 (DSR), 1 (CD) and 4 (DTR) tied together.
- **RS-422/485 Connector** Terminal Block
- **RS-422/485 Signals** TDA (-), TDB (+), RDA (-), RDB (+), GND
- **RS-422/485 Operation** DIP switch selectable RS-422 or RS-485 RS-485 2-wire or 4-wire, RS-422 4-wire
- **Biasing Resistors** 4.7k Ohms
- **Termination** None

Power

- **Source #1: Battery** (2) AAA batteries (not included)
- **Source #1: Battery Life** 7 hours fully loaded with no port power available. 100 to 250 hours, typical.
- **Source #2: RS-232** Port-powered from RS-232 handshake lines (requires 7-12 Vdc on at least one handshake line)
- **Source #3: External** 12 Vdc external PSU (not included, sold separately)
- **Source #3: Connector** Terminal block
- **Input Voltage** 12 Vdc @ 100 mA

Mechanical

- **Dimensions** 9.0 x 6.5 x 2.8 cm (3.6 x 2.6 x 1.1 in)
- **Enclosure** Plastic, ABS
- **Installation** Inline
- **Weight** 0.104 kg (net, without packaging)

Meantime Between Failures (MTBF)

- **MTBF** 241370 hours
- **Calculation Method** MIL217F Parts Count Reliability Prediction

Environmental

- **Operating Temperature** 0 to +70 °C
- **Storage Temperature** -40 to +85 °C
- **Operating Humidity** 95%, non-condensing

Regulatory / Approvals / Certifications

- **FCC Part 15, CISPR**
- **CE Directives** 2011/65/EU amended by (EU) 2015/863 Reduction of Hazardous Substances Directive (RoHS)
  2011/65/EU amended by (EU) 2015/863 Reduction of Hazardous Substances (RoHS)
  2012/19/EU - Waste Electrical & Electronic Equipment
- **Standards** EN 55022 + AC Class A Emissions
  EN 61000-6-1 Generic Standards for Residential, Commercial and Light-Industrial Environments

Ordering Information

Model Number	Part Number to Order	Description
ULI-224TB	BB-485BAT3	RS-232 to RS-422/485 Converter – DB9F/TB, (2) AAA batteries or port powered or external source

Accessories – Sold Separately

- **BB-SMI6B-12-V-ST** PSU, 12 Vdc, 500 mA, stripped/tinned

All product specifications are subject to change without notice.

ULI-224TC
ULI-224TCI
ULI-224TE

BB-485LDRC9
BB-485DRCI
BB-485DRCI-PH

Industrial-grade RS-232 to RS-485 Serial Converters



Features

- Converts RS-232 signals to RS-422/RS-485 signals
- Data rate: up to 115.2 kbps
- Extends data up to 1.2 km
- Optical isolation protection
- Wide operating temperature range
- Modbus compatible
- Automatic Send Data Dontrol - no software drivers required
- External power source required (not included, sold separately)
- DIN rail and panel mount options
- UL Class 1 / Division 2 and cULus Recognized options

Introduction

ULI-224 series industrial adapters convert RS-232 to RS-422/485. Optical isolation and surge suppression protect connected equipment from ground loops and surges - ideal for factory/warehouse automation, in-cabinet, security and other applications. Models ULI-224TCI and ULI-224TE provide premium 3-way isolation on input, output and power lines. Model ULI-224TCI is UL C1/D2 certified for rugged industrial use. Model ULI-224TE meets IEC-61850-3 and IEEE-1613 for electrical substations.

Specifications

Serial Technology

- **Data Rate** 115.2 kbps, max.
- **LED Indicators** TD, RD, Power
- **Modes** RS-422 4-wire, RS-485 2-wire & 4-wire
- **RS-232** Signals: TD, RD, GND

Model:	RS-232 Connector:	RS-422/485 Connector:	Termination, Ohms:	Industrial Bus:	Biasing:
ULI-224TC	DB9 female or TB	TB	120Ω	Modbus ASCII/RTU	–
ULI-224TCI	DB9 female	TB	120Ω	Modbus ASCII/RTU, Allen-Bradley® DH-485 compatible	–
ULI-224TE	DB9 female	TB	120Ω	Modbus ASCII/RTU	1.2KΩ XMT/RCV, built-in, switchable

Isolation

- **Rating** 2000 V
- **Method** Optical
- **Lines Protected** ULI-224TC: Data lines
  ULI-224TCI, ULI-224TE: Data lines, power

Surge Suppression

- **Method** TVS
- **Lines Protected** Data lines
- **Response Time** <1 pico-second
- **Peak Power Dissipation** ULI-224TC: 500 W, 7.5 bi-directional avalanche breakdown device
  ULI-224TCI, ULI-224TE: 600 W

Environmental

- **Operating Temperature** ULI-224TC, ULI-224TCI: -40 to +80 °C
  ULI-224TE: -40 to +85 °C
- **Storage Temperature** -40 to +85 °C (-40 to +185 °F)
- **Operating Humidity** 95%, non-condensing

Power

- **Source** External power required (sold separately)

Model:	Connector:	Input Voltage:	Consumption:
ULI-224TC	Terminal block	10-30 Vdc	0.5 W
ULI-224TCI	Terminal block	10-48 Vdc	0.96 W
ULI-224TE	Terminal block	10-48 Vdc	0.5 W

Mechanical

Model:	Enclosure:	Mounting:	Dimensions, mm:	Weight (net, without packaging):
ULI-224TC	IP20, plastic	DIN rail	25 x 79 x 95	0.249 kg
ULI-224TCI	IP30, plastic	DIN rail	114 x 33 x 124	0.204 kg
ULI-224TE	IP30, metal	Panel (DIN option)	132 x 93 x 31	0.209 kg

Meantime Between Failures (MTBF)

- **Calculation Method** MIL217F Parts Count Reliability Prediction

ULI-224TC	257448 hours
ULI-224TCI	254617 hours
ULI-224TE	163611 hours

Regulatory/Approvals/Certifications

- **CE Directives (all)** 2014/30/EU – Electromagnetic Compatibility (EMC)
  2011/65/EU amended by (EU) 2015/863 Reduction of Hazardous Substances (RoHS)
  2012/19/EU – Waste Electrical and Electronic Equipment

Model:	Regulatory:	CE Standards (EMC):	IEC Standards:
ULI-224TC	FCC, UL Recognized Comp. #E222870, KCC	EN 55032 Class B – Electromagnetic Compatibility of Multimedia Equipment – Emission Requirement EN 55024 – Information Technology Equipment - Immunity Characteristics – Limits and Methods of Measurement	–
ULI-224TCI	FCC, UL C1/D2 #E245458, UL 508 #E222870		EN 61000-6-1 – Generic Immunity Standards for Residential, Commercial and Light-Industrial Environments
ULI-224TE	FCC, UL C1/D2 #E245458, IEEE-1613, IEC-61850	EN 55011+AC – Information Technology Equipment – Class A RF Emissions EN 61000-6-2 – Generic Immunity Standard for (Heavy) Industrial Environments	–

All product specifications are subject to change without notice.

Dimensions - ULI-224TC

Unit = mm

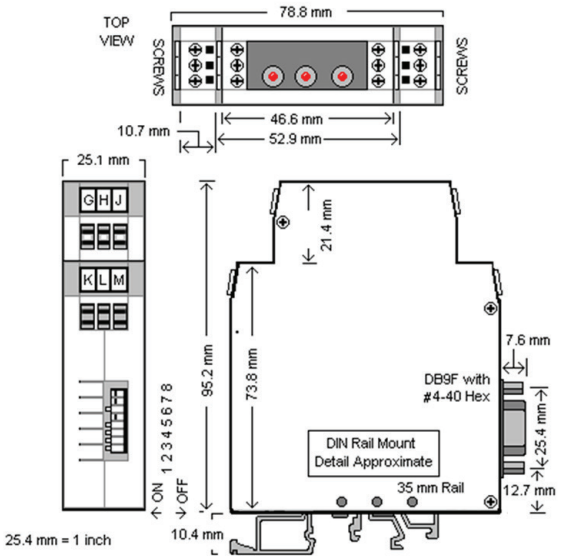

Dimensions - ULI-224TCI

Unit = mm

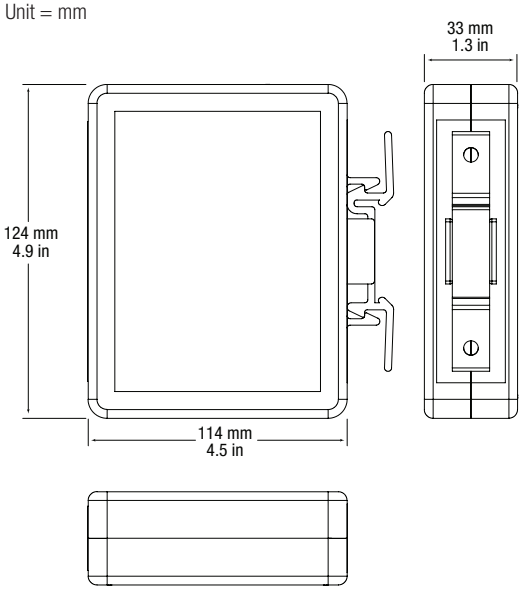

Dimensions - ULI-224TE

Unit = mm

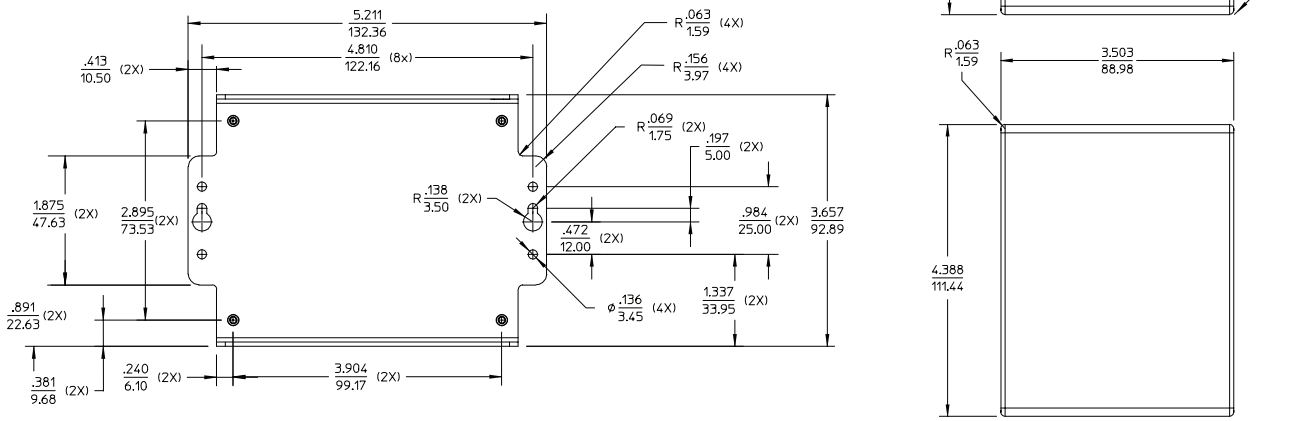

Ordering Information

Model Number	Part Number to Order	Description
ULI-224TC	BB-485LDRC9	RS-232 to RS-422/485 Converter – 2-way Isolation, RS-232 DB9/TB to RS-422/485 TB
ULI-224TCI	BB-485DRCI	RS-232 to RS-422/485 Converter – 3-way Isolation, DB9/TB, UL C1/D2, UL508, AB® DH-485
ULI-224TE	BB-485DRCI-PH	RS-232 to RS-422/485 Converter – 3-way Isolation, DB9/TB, UL C1/D2, IEEE1613, IEC61850

ULI-224TH BB-SCP211-DFTB3
ULI-224THC BB-SCP311-DFTB3

Compact, Panel Mount RS-232 to RS-485 Serial Converters



Features

- Convert RS-232 data signals to RS-422/485 signals
- 2kV optical isolation (Model# ULI-224THC)
- ESD protection: 8 kV contact, 15 kV air
- Data rate: up to 460.8 kbps (bit-wise enable)
- -40 to +80 °C wide operating temperature (model# ULI-224THC)
- Rugged metal panel mount case (DIN rail adapters sold separately)
- 10-30 Vdc external power source (not included, sold separately)
- UL Listed

Introduction

ULI- series RS-232 to RS-422/485 converters meet heavy industrial EMC standards. Bit-wise enabled circuitry automatically detects character time-outs – no need to set DIP switches for baud rate. Basic model ULI-224TH is designed for less demanding temperatures or when isolation is not required, such as applications where the data line does not exit the control cabinet. Model ULI-224THC is more robust and suitable for protecting expensive control equipment.

Specifications

Serial Technology

- **Data Rate** 460.8 kbps, max.
- **RS-232 Connector** DB9 female (DCE)
- **RS-232 Signals** TD, RD, GND
- **RS-422/485 Connector** Terminal block, removable
- **Modes** RS-422 4-wire, RS-485 2-wire & 4-wire
- **LED Indicators** TD, RD (Green LED, also indicates Power)
- **Industrial Bus** Modbus ASCII/RTU
- **Biasing** 1kΩ, switchable
- **Termination, Ohms** 120Ω, switchable

Isolation

- **Rating** 2000 V (model# ULI-224THC)
- **Method** Optical
- **Lines Protected** Data lines

Surge Suppression

- **DC Ports** +/- 0.5 kV +/- 1 kV
- **Signal Ports** +/- 1 kV

Environmental

- **Operating Temperature** ULI-224TH: 0 to +70 °C
  ULI-224THC: -40 to +80 °C
- **Storage Temperature** -40 to +85 °C
- **Operating Humidity** 95%, non-condensing

Power

- **Source** External PSU required (not included, sold separately)
- **Connector** Terminal block, removable
- **Input Voltage** 10-30 Vdc
- **Consumption** 1.0 Watt, max.

Mechanical

- **Enclosure** IP30, metal
- **Mounting** Panel (2 panel mount brackets included)
- **Dimensions** 99.1 x 22.9 x 73.7 mm
- **Weight** 0.15 kg (net, without packaging)

Meantime Between Failures (MTBF)

- **MTBF** ULI-224TH: 313926 hours
  ULI-224THC: 217576 hours
- **Calculation Method** MIL217F Parts Count Reliability Prediction

Regulatory/Approvals/Certifications

- **Emissions** FCC Class B, CISPR Class B (File# EN55022)
- **Regulatory** UL Listed, UL File# E222870
- **CE Directives** 2014/30/EU - Electromagnetic Compatibility (EMC)
  2011/65/EU amended by (EU) 2015/863 Reduction of Hazardous Substances (RoHS)
  2012/19/EU - Waste Electrical and Electronic Equipment
- **CE Standards (EMC)** EN 55032 Class B – Electromagnetic Compatibility of Multimedia Equipment - Emission Requirements
  EN 55024 - Information Technology Equipment – Immunity Characteristics – Limits and Methods of Measurement
- **ULI-224THC (only)** EN 61000-6-2 – Generic Immunity Standard for (Heavy) Industrial Environments

Ordering Information

Model Number	Part Number to Order	Description
ULI-224TH	BB-SCP211-DFTB3	RS-232 to RS-422/485 Converter, DB9F/TB, Non-isolated, Standard Temp.
ULI-224THC	BB-SCP311T-DFTB3	RS-232 to RS-422/485 Converter, DB9F/TB, 2kV Isolation, Wide Temp.

Accessories – Sold Separately

- **BB-SMI6-12-V-ST** PSU, 12 Vdc, 500 mA, 6 W, stripped/tinned, international AC input & blades
- **BB-DRAD35** DIN rail mounting clips, 35mm

All product specifications are subject to change without notice.

Dimensions

Unit = mm / in

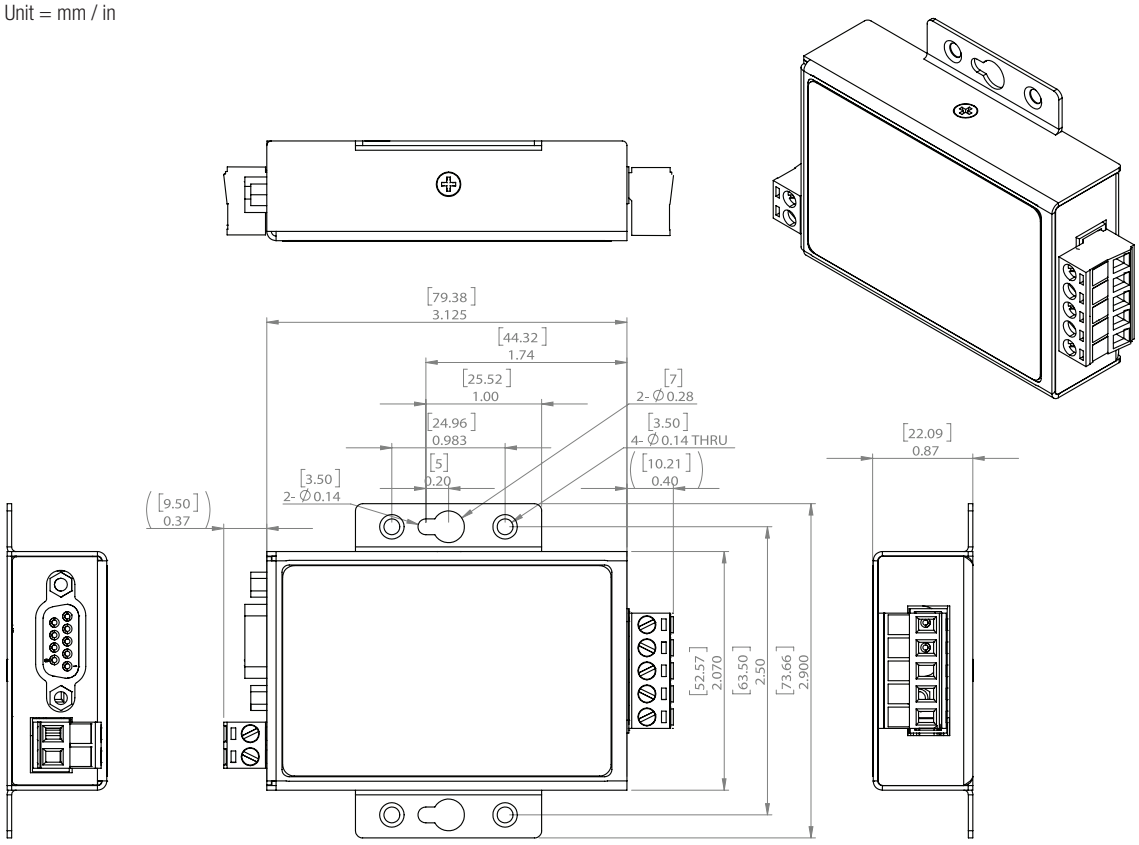

ULI-224 Series Selection Guide

RS-232 to RS-422/485 Converters



Common Features

- Convert RS-232 to RS-422/485 signals
- Data rates: up to 115.2 kbps or 480.8 kbps
- Industrial designs and specifications
- Automatic Send Data Control
- Isolation and surge suppression options
- Industrial protocol support options
- Wide operating temperature
- External, port or battery powering
- DIN rail, panel mount or in-line installation

Serial Converters Comparison Table

Model Number	ULI-224TC	ULI-224TCI	ULI-224TE	ULI-224TH	ULI-224THC	ULI-224D	ULI-224T	ULI-224TCL	ULI-224TB
Part Number to Order	BB-485LDRC9	BB-485DRCI	BB-485DRCI-PH	BB-SCP211-DFTB3	BB-SCP311T-DFTB3	BB-4WSD9R	BB-4WSD9TB	BB-4WSD90TB	BB-485BAT3
Description	**Industrial-grade RS-232 to RS-422/485 Converters**			**Compact, Panel Mount RS-232 to RS-422/485 Converters**		**In-line, Commercial-grade RS-232 to RS-422/485 Converters**			**Battery-Powered RS-232 to 422/485 Converter**
Key Features	Dual RS-232 connectors (terminal block & DB9)	3-way isolation, A-B® DH-485, UL C1/D2, Oil & Gas	3-way isolation, UL C1/D2, IEEE1613, IEC-61850, Power Utilities	Small Form Factor, Panel Mount		Inline Installation			3 power options
Industrial Rating	Light		Heavy			Light			
RS-232 Connector	Terminal block (DB9 option)	DB9 female							
RS-422/485 Connector	Terminal block					DB9 female	Terminal block		
Data Rate, maximum	115.2 kbps			460.8 kbps		115.2 kbps			
Modes (RS-422 4-wire RS-485 2 & 4 wire)	✓	✓	✓	✓	✓	✓	✓	✓	✓
LEDs	TD, RD, PWR			TD, RD		-	-	TD, RD	-
Isolation	2 kV (input, output)	2 kV (input, output, power)		-	2 kV (input, output)	-	-	2 kV (input, output)	-
Surge Suppression	500 W	600 W		± 0.5 k Vdc ports, ±1 kV signal ports		-	-	-	-
Modbus	✓	✓ Allen-Bradley® DH-485	✓	✓	✓	-	-	✓	-
Automatic Send Data Control	✓	✓	✓	✓	✓	✓	✓	✓	✓
Operating Temperature	-40 to +80 °C	-40 to +85 °C		-0 to +70 °C	-40 to +80 °C	0 to +70 °C			
External Power	10 to 30 Vdc	10 to 48 Vdc		10 to 30 Vdc		12 Vdc		10 to 48 Vdc	12 to 16 Vdc
Power Connector	Terminal block					2.5 mm plug, tip positive		Terminal block	
Port Power	-	-	-	-	-	RS-232 handshake		-	RS-232 handshake
Battery Power	-	-	-	-	-	-	-	-	(2) AAA
Enclosure	IP20, plastic	IP30, plastic	IP30, metal	IP30, metal		Plastic			
Mounting Installation	DIN rail		Panel (DIN option)			Inline			
Dimensions, mm	25 x 79 x 95	114 x 33 x 124	132 x 93 x 33	99 x 23 x 74	99 x 23 x 74	78 x 43 x 20	90 x 43 x 23	98 x 43 x 23	90 x 65 x 28
MTBF (MIL217F), hours	257448	254617	163611	313926	217576	880179	345242	179604	241370
Regulatory/Approvals/ Certifications	FCC, CE								
	KCC, cULus Recognized #E222870, EN55021, EN55024	UL 508 #E222870, **UL C1/D2 #E245458***, EN55032/B, EN55024, EN61000-6-1	**UL C1/D2 #E245458***, **IEC61850-3†**, **IEEE-1613‡**, EN55011+AC, EN61000-6-2	UL, EN55032/B, EN55024	UL, EN55032/B, EN55024, EN61000-6-2	EN55032/B, EN55024, EN61000-6-3+A1, EN61000-6-1			EN55022+AC, EN61000-6-1

*UL C1/D2 #E245458 †IEC61850-3 ‡IEEE-1613

All product specifications are subject to change without notice.

Last updated: 7-Oct-2022