ULI-421CL BB-UH401
ULI-421C BB-UHR401
ULI-422C BB-UHR402

Industrial USB 2.0 Isolators



Features

- 4 kV isolation protection for equipment and data
- ESD protection – 15 kV air, 8 kV contact
- 12 Mbps full speed
- USB 1.1 or 2.0 (by model)
- High retention USB connector ports
- One or two port models
- USB cable included
- USB bus or external power (by model)
- Panel, DIN rail or in-line installation (by model)

Advantech one and two port ruggedized USB isolators meet heavy industrial EMC standards. 4 kV isolation between upstream and downstream ports protects equipment and data from ground loops, surges and spikes. The isolators operate in unfriendly electrical environments – near variable frequency drives, motor control centers, welding and other large electrical loads. Downstream port(s) provide 500 mA power to connected USB devices. "High retention" USB connectors hold standard USB cables tight requiring up to 1.45kg (3.2lb) force to disconnect them – perfect for high vibration applications.

Specifications

USB Technology

Model #:	Upstream Port:	Downstream Ports:	Data Rate:	Standards:
ULI-421CL*	(1) Type B female, high retention	(1) Type A female, high retention	12 Mbps	2.0, 1.1
ULI-421C†		(1) Type A female, high retention	1.5 Mbps, 12 Mbps	
ULI-422C†		(2) Type A female, high retention	1.5 Mbps, 12 Mbps	

* Device is transparent to operating system, software drivers not required, and will not be enumerated in device manager.
† Speed: 12 Mbps multi-transaction translator, 1 per port.

Isolation & ESD Protections

Model #:	Optical Isolation:	ESD Protection:
ULI-421CL	4 kV (upstream to downstream)	15 kV air, 8 kV contact
ULI-421C		
ULI-422C		

Power

- **LED Indicators** Power, Port/s Beady

Model #:	Source:	Input Voltage:	Connector:	Consumption:	Downstream, per port:
ULI-421CL	USB Bus	5 Vdc	–	–	Up to 100mA (with full-power 500mA upstream connection)
ULI-421C	External PSU‡ (required)	10-30 Vdc	Threaded barrel jack, center+	4 W	500 mA
ULI-422C				7 W	

‡ Included PSU: 110–240 Vac input; 12 Vdc output; 50/60 Hz; US, EU, UK blades included.

Environmental

Model #:	Operating Temperature:	Storage Temperature:	Humidity:
ULI-421CL	-40 to +80 °C	-40 to +85 °C	0 to +95, non-condensing
ULI-421C*	0 to +50 °C		
ULI-422C*			

*Temperature rating limited due to included Power Supply Unit. Without PSU, rating is -40 to 85 °C

Mechanical

Model #:	Enclosure:	Mounting:	Dimensions, mm:	Weight, gm:	USB Cable:
ULI-421CL	IP30, plastic	In-line	43.2 x 50.8 x 20.3	22.7	Included, 0.9 m
ULI-421C		Panel, DIN rail	79 x 54 x 27	80	Included, 1.8 m
ULI-422C					

Meantime Between Failures (MTBF)

- **Calculation Method** MIL217F Parts Count Reliability Prediction

Model #:	Hours:
ULI-421CL	1049851
ULI-421C	375842
ULI-422C	353807

All product specifications are subject to change without notice.
Last updated: 26-May-2022

Regulatory/Approvals/Certifications

Model #:	Approvals:	CE Directives:	CE Standards:	Standards - other:
ULI-421CL	FCC Class A, CISPR 32, CE, KCC MSIP ID#: MSIP-REI-AAD-BB-UH401	2014/30/EU – Electromagnetic Compatibility Directive 2011/65/EU amended by 2015/863/EU – Reduction of Hazardous Substances Directive (RoHS) 2012/19/EU – Waste Electrical and Electronic Equipment Directive (WEEE)	EMC: EN 55032 + AC, Class A – Information Technology Equipment EN 61000-6-4 – Generic Emissions Standard for (Heavy) Industrial Environments EN61000-6-2 Generic Immunity Standard for (Heavy) Industrial Environments	–
ULI-421C ULI-422C	FCC, CE, KCC R(MSIP) ID#: MSIP-REM-AK0-UHR401 (Models BB-UHR-401, BB-UHR402)		EMC: EN 55032 Class B – Electromagnetic Compatibility of Multimedia Equipment - Emission Requirements EN 55024 – Information Technology Equipment – Immunity Characteristics – Limits and Methods of Measurement EN 61000-6-4 +A1 – Generic Emission Standard for Industrial Environments EN 61000-6-2 – Generic Immunity Standard for Industrial Environments	IEC60068-2-27 – (Shock) 50G Peak, 11 ms, 3 axes IEC60068-2-6 – (Vibration) 4G, 140-500 Hz, 3 axes IEC60068-2-32 – (Drop) 10 drops from sides, corner, edges

Dimensions - ULI-421CL

Unit = mm / in

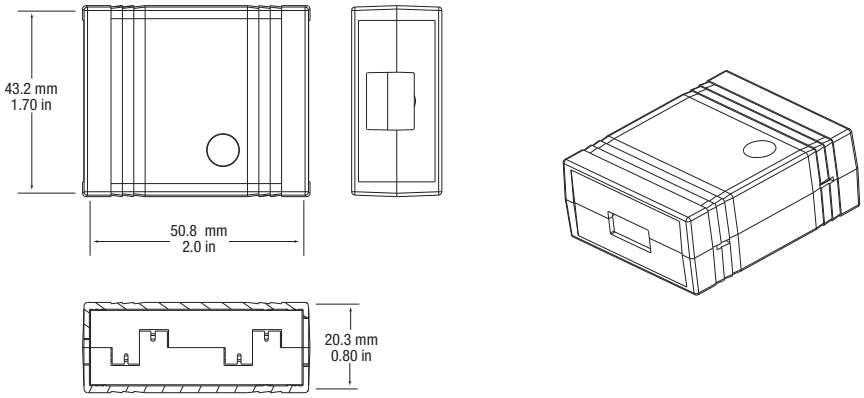

Dimensions - ULI-421C, ULI-422C

Unit = mm / in

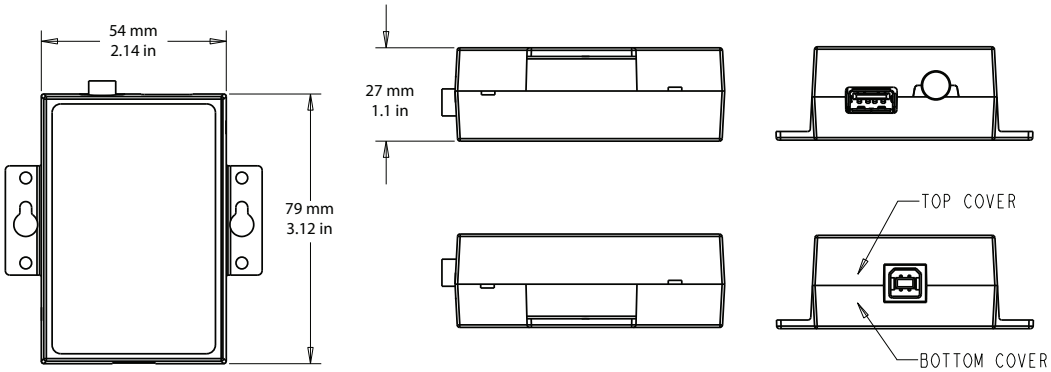

Ordering Information

Model Number	Part Number to Order	Description
ULI-421CL	BB-UH401	Industrial USB 2.0 Isolator, 1-port, USB port power. *(0.9 m USB cable included.)*
ULI-421C	BB-UHR401	Industrial USB 2.0 Isolator, 1-port, External power. (*1.8 m USB cable included; 12 Vdc wall plug-in PSU included)*
ULI-422C	BB-UHR402	Industrial USB 2.0 Isolator, 2-port, External power. *(1.8 m USB cable included; 12 Vdc wall plug-in PSU included)*

ULI-421 Series Selection Guide

Industrial USB 2.0 Isolators



Common Features

- 4 kV isolation protection for equipment and data
- ESD protection – 15 kV air, 8 kV contact
- 12 Mbps full speed
- USB 1.1 or 2.0 (by model)
- High retention USB connector ports
- One or two port models
- USB cable included
- USB bus or external power (by model)
- Panel, DIN rail or in-line installation (by model)

Industrial USB 2.0 Isolators Comparison Table

Model Number	ULI-421CL	ULI-421C	ULI-422C
Part Number to Order	BB-UH401	BB-UHR401	BB-UHR402
Description	**USB 2.0 Industrial Isolators**		
Upstream Port	1		
Upstream Connector	USB Type B (Female), high retention		
Downstream Port/s	1		2
Downstream Connector	USB Type A (Female), high retention		
Data Rate, max.	12 Mbps *UH401 has a fixed data rate of 12 Mbps	1.5 Mbps, 12 Mbps	
USB Standards	2.0, 1.1		
LED Indicators	Power	Power Port/s Ready	
ESD Protection	15 kV air, 8 kV contact		
Optical Isolation	4 kV (upstream to downstream)		
Operating Temperature	-40 to +80 °C	0 to +50 °C * Temperature rating limited due to included Power Supply Unit. Without PSU, rating is -40 to 85 °C	
Power Source	USB port	External PSU (required, included)	
Power Input	5 Vdc	10-30 Vdc	
Power Connector	–	Locking barrel jack, threaded, center positive	
Power Consumption	–	4 W (external PSU)	7 W (external PSU)
Downstream Power	100 mA (wtih full-power 500mA upstream connection	500 mA	
Enclosure	IP30, plastic		
Mounting Installation	In-line	DIN rail, panel	
Dimensions, mm	43.2 x 50.8 x 20.3	79 x 54 x 27	
MTBF (MIL217F), hours	1049851	375842	353807
Regulatory / Approvals / Certifications	FCC Class A, CISPR32, CE, KCC MSIP ID#: MSIP-REI-AAD-BB-UH401	FCC, CE, KCC R(MSIP) ID#:MSIP-REM-AK0- UHR401 (Models BBUHR-401, BB-UHR402)	
	2014/30/EU – Electromagnetic Compatibility Directive 2011/65/EU amended by 2015/863/ EU – Reduction of Hazardous Substances Directive (RoHS) 2012/19/EU – Waste Electrical and Electronic Equipment Directive (WEEE)		
	EMC: EN 55032 + AC, Class A – Information Technology Equipment EN 61000-6-4 – Generic Emissions Standard for (Heavy) Industrial Environments EN61000-6-2 – Generic Immunity Standard for (Heavy) Industrial Environments	EMC: EN 55032 Class B – Electromagnetic Compatibility of Multimedia Equipment - Emission Requirements EN 55024 – Information Technology Equipment – Immunity Characteristics – Limits and Methods of Measurement EN 61000-6-4 +A1 – Generic Emission Standard for Industrial Environments EN 61000-6-2 – Generic Immunity Standard for Industrial Environments	
	–	IEC60068-2-27 – (Shock) 50G Peak, 11 ms, 3 axes IEC60068-2-6 – (Vibration) 4G, 140-500 Hz, 3 axes IEC60068-2-32 – (Drop) 10 drops from sides, corner, edges	

All product specifications are subject to change without notice.

Last updated: 26-May-2022