ULI-414LIB BB-USBHUB4OEM
ULI-414LI BB-UH104
ULI-414I BB-UHR204
ULI-417I BB-UHR207
ULI-414CI BB-UHR304
ULI-417CI BB-UHR307
ULI-414H BB-USH204-B
ULI-417H BB-USH207

Industrial USB 2.0 & USB 3.2 Hubs



Features (model dependent)

- Expand one USB port to 4 or 7 USB ports
- USB 2.0 & USB 3.2 Gen 1
- ESD protection
- High retention USB connectors grip cables tight
- Wide operating temperature (USB 2.0 hubs)
- USB host port power or external PSU power
- Metal or plastic enclosures – desk, panel, DIN rail mount
- 4 kV isolation between upsteam & downsteam ports (models ULI-414CI, ULI-417CI)
- Compact, OEM open bare-board hub (model ULI-414LIB)

Introduction

These Advantech USB 2.0 and USB 3.2 Gen 1 hubs are more robust than office-grade hubs. Isolation and ESD protections are ideal for electrically harsh environments. "High Retention" USB connectors hold standard USB cables tight – requiring up to 1.54 kg (3.4 lb) force to disconnect them. Model ULI-414LIB is suitable for OEM applications where space is limited and/or external packaging is not required. ULI-414H and ULI-417H feature SuperSpeed USB 3.2 Gen 1 with data rates up to 5 Gbps.

Specifications

USB Technology

Model #:	Upstream Port:	Downstream Ports:	Data Rate, each port:	Standards:
ULI-414LIB*	(1) High retention, Type B female	(4) High retention, Type A female	1.5, 12, 480 Mbps	2.0, 1.1 (backward compatible)
ULI-414LI		(4) High retention, Type A female		
ULI-414I		(7) High retention, Type A female		
ULI-417I		(4) High retention, Type A female	12 Mbps** +	
ULI-414CI		(7) High retention, Type A female		
ULI-417CI		(4) Type A	Up to 5 Gbps	SuperSpeed 3.2 Gen 1 (2.0, 1.1 backward compatible)
ULI-414H#	(1) Type B	(7) Type A		
ULI-417H#				

* When installed, ULI-414LIB appears as an unbranded USB hub.
** Isolation limits speed to 12 Mbps. (ULI, 414CI, ULI417CI)
+ Multi-transaction translator, 1 per port. (ULI, 414CI, ULI417CI)
# Supports xHCI USB controller. (ULI-414H, ULI-417H)

Isolation & ESD Protections

Model #:	Isolation:	ESD Protection:	Surge Protection:
ULI-414LIB	–	15 kV air, 8kV contact	± 0.5 kV DC ports, ± 1 kV signal ports
ULI-414LI			
ULI-414I			
ULI-417I			
ULI-414CI	4 kV		
ULI-417CI			
ULI-414H	–	8 kV air	600 W
ULI-417H			

Environmental

Model #:	Operating Temperature:	Storage Temperature:	Relative Humidity:
ULI-414LIB	-40 to +80 °C	-40 to +85 °C	0 to +95%, non-condensing
ULI-414LI			
ULI-414I			
ULI-417I			
ULI-414CI	-40 to +80 °C (0 to +40 °C using wall plug PSU)		
ULI-417CI			
ULI-414H	0 to +50 °C	-20 to +50 °C	0 to +85%, non-condensing
ULI-417H	0 to +40 °C		

Power

Model #:	Source:	Input Voltage:	Connection:	Consumption:	Downstream, per port:
ULI-414LIB	USB port†	5 Vdc	–	2.5 W, max.	100 mA
ULI-414LI			–		
ULI-414I	USB port† *OR* external PSU	UBS port: 5 Vdc External PSU: 10-30 Vdc	Terminal Block (3 pos., 5.08 mm spacing, 28-12 AWG, solid wire) *OR* Barrel Jack (locking, threaded, 5.5mm, center positive)	16 W	500 mA
ULI-417I	External PSU (required, not included)	External PSU: 10-30 Vdc		30 W	
ULI-414CI				16 W	
ULI-417CI				30 W	
ULI-414H		External PSU: 9-30 Vdc	3-pin terminal block OR threaded barrel DC power jack	30 W	2.4A‡
ULI-417H		External PSU: 9-24 Vdc		36 W	900 mA

† Check device to ensure USB bus power is adequate. If more power is required, Advantech offers external powered hubs.
‡ Each downstream port supports up to 2.4A to a maximum of 27W total (ULI-414H, BB-USH204-B).

Mechanical

Model #:	Enclosure:	Mounting:	Dimensions, mm:	Weight, gm:	USB Cable:
ULI-414LIB	Open board	OEM	34 x 60 x 17	22.7	Not included¶
ULI-414LI	IP30 Plastic	Panel #	65 x 61 x 27§	49.9	
ULI-414I	IP30 metal (LEDs for Power, Port Ready)	Desk, DIN rail, panel #	168.2 x 86.3 x 35.1§	64.0	Included, 1.8m
ULI-417I			233.2 x 119.4 x 35.1§		
ULI-414CI			168.2 x 86.3 x 35.1§		
ULI-417CI			233.2 x 119.4 x 35.1§		
ULI-414H	Industrial grade, metal	DIN rail, panel	138.8 x 68.5 x 25	600	Included, 2.0 m
ULI-417H				620	

Mounting kit included.
§ Enclosure with brackets.
¶ A standard USB cable is required to connect to PC.

Meantime Between Failures (MTBF)

- Calculation Method MIL217F Parts Count Reliability Prediction

Model #:	Hours:
ULI-414LIB	552747
ULI-414LI	
ULI-414I	190999
ULI-417I	211773

Model #:	Hours:
ULI-414CI	143330
ULI-417CI	151173
ULI-414H	275611
ULI-417H	935103

All product specifications are subject to change without notice.

ULI-414LIB BB-USBHUB4OEM
ULI-414LI BB-UH104
ULI-414I BB-UHR204
ULI-417I BB-UHR207
ULI-414CI BB-UHR304
ULI-417CI BB-UHR307
ULI-414H BB-USH204-B
ULI-417H BB-USH207

Regulatory/Approvals/Certifications

Model #:	Approvals:	CE Standards:	Standards - other:
ULI-414LIB	FCC	EMC: EN 55032 Class B – Electromagnetic Compatibility of Multimedia Equipment – Emissions Requirements EN 55024 – Information Technology Equipment – Immunity Characteristics – Limits and Methods of Measurement	EN 61000-6-1 – Generic Immunity Standard for Residential, Commercial and Light-industrial Environments
ULI-414LI			
ULI-414I	FCC, UL C1/D2		EN 61000-6-1 – Generic Immunity Standard for Residential, Commercial and Light-industrial Environments EN 61000-6-3 +A1 – Generic Emissions Standard for Residential, Commercial and Light-industrial Environments (Class B)
ULI-417I	FCC, KCC, UL C1/D2		
ULI-414CI	FCC, UL C1/D2		
ULI-417CI	FCC, KCC, UL C1/D2		
ULI-414H	FCC, CE	EN 55032: 2015 + A1: 2020, EN 55035: 2017 + A11: 2020 EN IEC 61000-6-4: 2019, EN IEC 61000-6-2: 2019 EN 55011: 2016 + A2: 2021, EN 61000-4-2: 2009 EN 61000-4-8: 2010, EN IEC 61000-4-3: 2020 EN 61000-4-4: 2012, EN 61000-4-5: 2014 + A1: 2017 EN 61000-6-6: 2014 + AC: 2015	–
ULI-417H	FCC, CE, KCC	EN 55032: 2012 + AC: 2013 EN 61000-3-2: 2014 EN 61000-3-3: 2013 EN 55024: 2010	

Dimensions - ULI-414LIB

Unit = mm / in

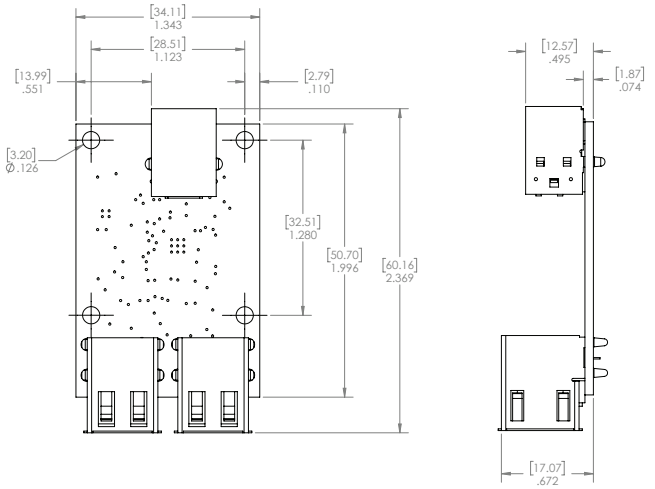

Dimensions - ULI-414LI

Unit = mm

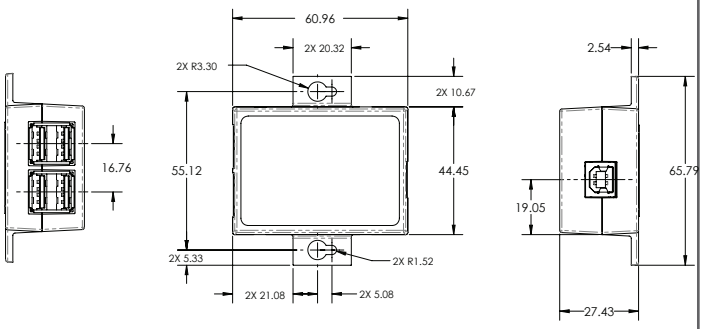

Dimensions - ULI-414I, ULI-414CI

Unit = mm

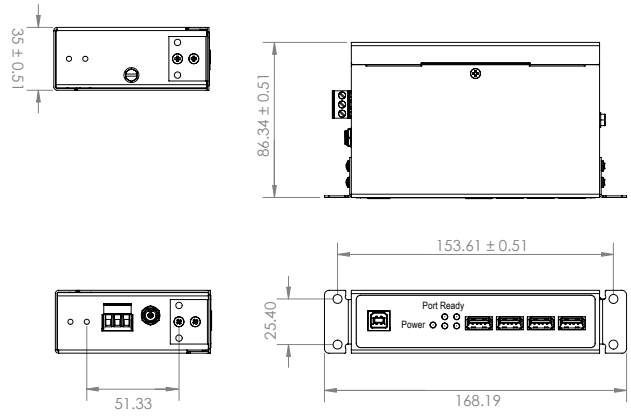

Dimensions - ULI-417I, ULI-417CI

Unit = mm

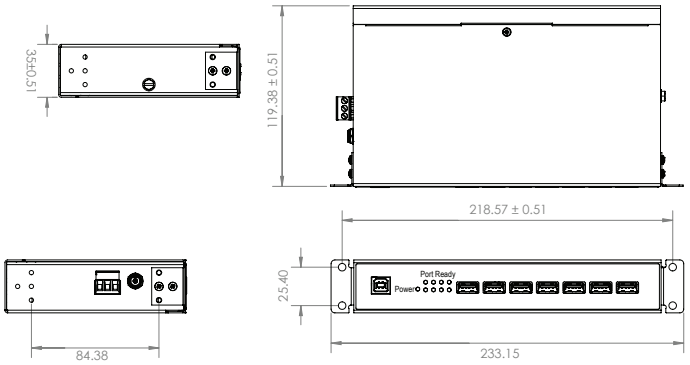

Dimensions - ULI-414H

Unit = mm

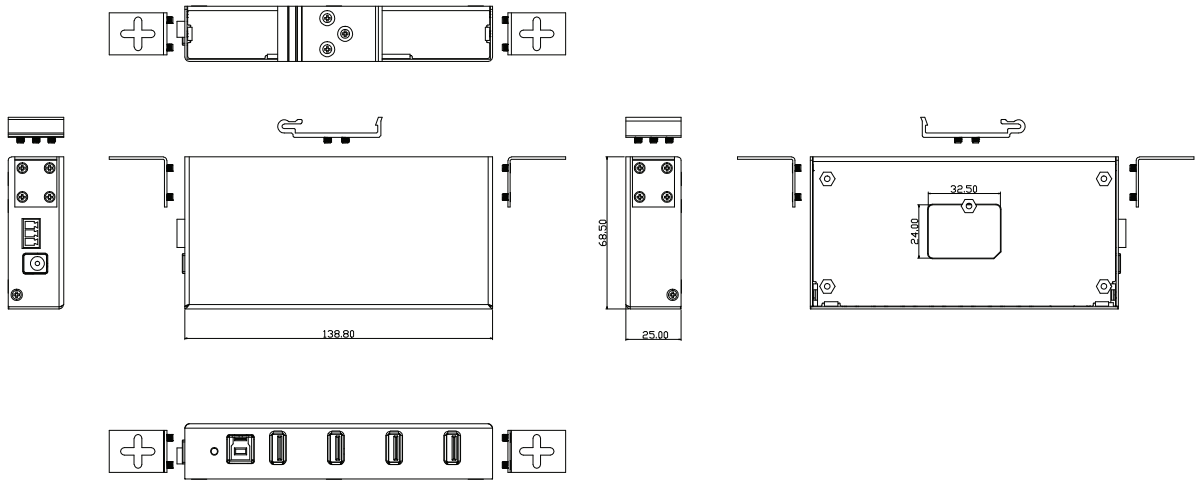

Dimensions - ULI-417H

Unit = mm

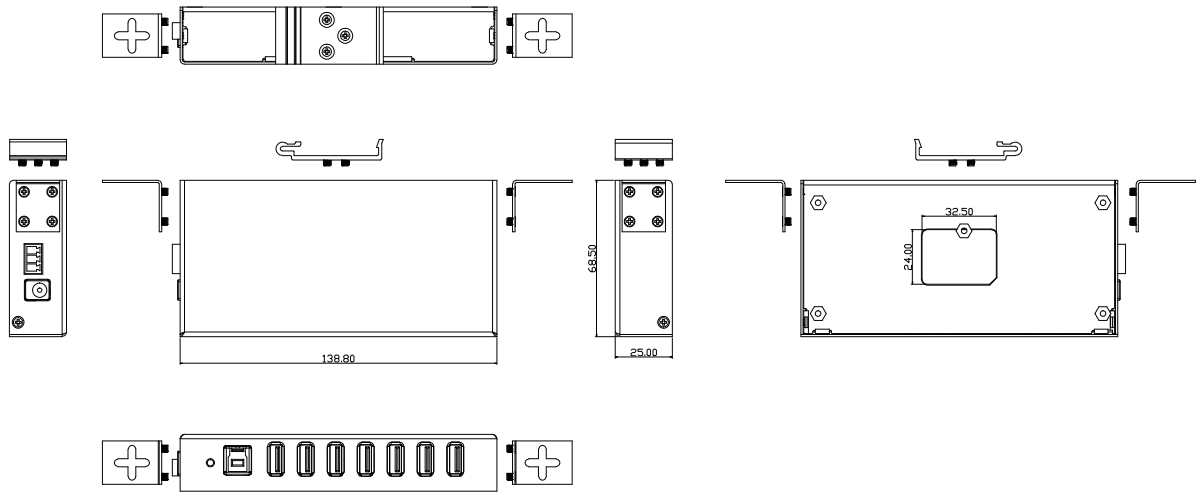

Ordering Information

Model Number	Part Number to Order	Description
ULI-414LIB	BB-USBHUB4OEM	Industrial USB 2.0 Hub, 4-port, OEM open board module, High retention USB ports, USB port power. *(USB cable required.)*
ULI-414LI	BB-UH104	Industrial USB 2.0 Hub, 4-port, High retention USB, USB port power. *(USB cable required. Mounting kit included.)*
ULI-414I	BB-UHR204	Industrial USB 2.0 Hub, 4-port, High retention USB, USB or PSU power. *(1.8m USB cable & mounting kit included; PSU sold separately.)*
ULI-417I	BB-UHR207	Industrial USB 2.0 Hub, 7-port, High retention USB, External power. *(1.8m USB cable & mounting kit included; PSU sold separately.)*
ULI-414CI	BB-UHR304	Industrial USB 2.0 Hub, 4-port, High retention USB, 2kV Isolation, External power. *(1.8m USB cable & mounting kit included; PSU sold separately.)*
ULI-417CI	BB-UHR307	Industrial USB 2.0 Hub, 7-port, High retention USB, 2kV Isolation, External power. *(1.8m USB cable & mounting kit included; PSU sold separately.)*
ULI-414H	BB-USH204-B	Industrial USB 3.2 Gen 1 Hub, 4-port, External power. *(2m USB cable included; PSU sold separately.)*
ULI-417H	BB-USH207	Industrial USB 3.2 Gen 1 Hub, 7-port, External power. *(2m USB cable included; PSU sold separately.)*

ULI-410 Series Selection Guide

Industrial USB 2.0 and USB 3.2 Hubs



Common Features

- Expand one USB port to 4 or 7 USB ports
- USB 2.0 & USB 3.2 Gen 1
- ESD protection
- Wide operating temperature (USB 2.0 hubs)
- USB host port power or external PSU power
- Metal or plastic enclosures – desk, panel, DIN rail mount
- 4 kV isolation between upsteam & downsteam ports (models ULI-414CI, ULI-417CI)
- Compact, OEM open bare-board hub (model ULI-414LIB)

Industrial USB 2.0 & 3.0 Hubs Comparison Table

Model Number	ULI-414LIB	ULI-414LI	ULI-414I	ULI-417I	ULI-414CI	ULI-417CI	ULI-414H	ULI-417H
Part Number to Order	BB-USBHUB4OEM	BB-UH104	BB-UHR204	BB-UHR207	BB-UHR304	BB-UHR307	BB-USH204-B	BB-USH207
Description	**USB 2.0/1.1, OEM Open Board Module**	**USB 2.0/1.1 Hub, 4-port Miniature**	**USB 2.0/1.1 Hubs, 4-port UL C1/D2 & 7-port**		**USB 2.0/1.1 Hubs, 4-port UL C1/D2 & 7-port Isolated**		**USB 3.2 Gen 1 SuperSpeed Hubs, 4-port & 7-port**	
Upstream Port	1							
Upstream Connector	USB Type B female, high-retention						USB Type B	
Downstream Port/s	4		7		4	7	4	7
Downstream Connector	USB Type A female						USB Type A	
Data Rate, max.	1.5, 12, 480 Mbps	480 Mbps			12 Mbps		5 Gbps	
USB Standards	2.0, 1.1 (backwards compatible)						3.2 Gen 1, 2.0, 1.1 (backwards compatible)	
LED Indicators	–		Power, Port Ready				Power	
ESD Protection	15 kV air, 8 kV contact						15kV air	8kV air
Surge Protection	±0.5 kV dc ports, ±1 kV signal ports						±0.5 kV dc ports, ±1 kV signal ports	600W
Isolation, Optical	–				4 kV		–	
Operating Temperature	-40 to +80 °C						0 to +50 °C	0 to +40 °C
Power Source	USB port		USB port or external PSU	External PSU				
Power Input	5 Vdc		USB port: 5 Vdc External PSU: 10-30 Vdc	10-30 Vdc			9-30 Vdc	9-24 Vdc
Power Connector Options	–		Terminal block (3-position, 5.08mm spacing, 28-12 AWG, solid wire) *OR* barrel jack (locking, threaded, 5.5 mm, center positive)				3-pin terminal block *OR* threaded barrel DC power jack	
Downstream Power	100 mA		500 mA				2.4A‡	900 mA
Enclosure	Open board	IP30 plastic	IP30 metal				Industrial-grade metal	
Mounting Installation	OEM	Panel	Desk, DIN rail, panel				DIN rail, panel	
Dimensions, mm	34 x 60 x 17	65 x 61 x 27 (with brackets)	168.2 x 86.3 x 35.1 (with brackets)	233.2 x 119.4 x 35.1 (with brackets)	168.2 x 86.3 x 35.1 (with brackets)	233.2 x 119.4 x 35.1 (with brackets)	138.8 x 68.5 x 25	
MTBF (MIL217F), hours	552747		190999	211773	143330	151173	275611	935103
Regulatory / Approvals / Certifications	FCC, CE						FCC, CE	
	2014/30/EU – Electromagnetic Compatibility 2011/65/EU amended by (EU) 2015/863 – Reduction of Hazardous Substances (RoHS) 2012/19/EU – Waste Electrical and Electronic Equipment (WEEE)							
	EN 55032 Class B – Electromagnetic Compatibility of Multimedia Equipment – Emissions Requirements EN 55024 – Information Technology Equipment – Immunity Characteristics – Limits and Methods of Measurement						EN 55032: 2015 + A1: 2020 EN 55035: 2017 + A11: 2020 EN IEC 61000-6-4: 2019 EN IEC 61000-6-2: 2019 EN 55011: 2016 + A2: 2021 EN 61000-4-2: 2009 EN 61000-4-8: 2010 EN IEC 61000-4-3: 2020 EN 61000-4-4: 2012 EN 61000-4-5: 2014 + A1: 2017 EN 61000-4-6: 2014 + AC: 2015	EN 55032: 2012 + AC: 2013 EN 61000-3-2: 2014 EN 61000-3-3: 2013 EN 55024: 2010
	–		**UL C1/D2*** (ULI-414I & ULI-417I)	KCC	**UL C1/D2*** (ULI-414CI & ULI-417CI)	KCC	-	KCC
	EN 61000-6-1 – Generic Immunity Standard for Residential, Commercial & Light-industrial Environments		EN 61000-6-1 – Generic Immunity Standard for Residential, Commercial & Light-industrial Environments EN 61000-6-3 +A1 (B) – Generic Emissions Standard for Residential, Commercial & Light-industrial Environments				–	

‡ Each downstream port supports up to 2.4A to a maximum of 27W total (ULI-414H, BB-USH204-B).

*UL C1/D2 #E245458

All product specifications are subject to change without notice.

Last updated: 12.Sept.2023