EKI-9316

Industrial-Class 16 Port Full Gigabit Managed DIN Rail Switch



Features

- All Gigabit connections support dual-ring protection and non-blocking traffic forwarding
- X-Ring Pro: recovery time within 20ms for 250 node connections
- STP, RSTP, MSTP for better redundancy
- Super security mechanism includes SSL,SSH, 802.1X, MAC, IP filtering, RADIUS, TACACS+, VLAN for access protection
- Dual power input, dual image for system reliability
- Operating temperature: -40 ~ 75°C

Introduction

The EKI-9316 Gigabit Managed Ethernet Switches are designed for rigorous mission critical applications, such as factory automation, ITS, and process control. The 4 Gigabit Ethernet ports allow great flexibility to build up a Gigabit redundant ring and a Gigabit uplink.

The EKI-9316 is equipped with 12 Gigabit Ethernet ports and up to 4 fiber optic ports, making them ideal for upgrading an existing network to Gigabit speed or building a new, full Gigabit network. The X-Ring Pro with RSTP, STP and MSTP support, increases system reliability and the availability of your network. The EKI-9316 is designed especially for communication demanding applications, such as video and process monitoring, or intelligent transportation systems, all of which can benefit from a scalable backbone construction.

Specifications

Interface

- **I/O Port** 12 x 10/100/1000Base-T/TX RJ-45
4 x 1000 BASE-X SFP
- **Console port** RJ-45
- **F/W backup port** USB
- **Power Connector** 6-pin screw Terminal Block (including relay)

Physical

- **Enclosure** Aluminum Shell
- **Protection Class** IP 30
- **Installation** DIN Rail
- **Dimensions (W x H x D)** 86 x 165 x 125 (mm)

LED Display

- **System LED** PWR1, PWR2, SYS, CFG, Alarm and R.M.
- **Port LED** Link / Speed / Activity

Environment

- **Operating Temperature** -40 ~ 75°C
- **Storage Temperature** -40 ~ 85°C
- **Ambient Relative Humidity** 10 ~ 95% (non-condensing)
- **Humidity** 10 ~ 95% (non-condensing)

Power

- **Power Consumption** ~ 21.82 Watts (System)
- **Power Input** 24/48 V_{DC} dual inputs

Certification

- **EMI** CE, FCC Class A
- **Safety** UL60950 C1D2
- **EMC** EN61000-6-4; EN61000-6-2; EN61000-4-2 (ESD) Level 4 EN61000-4-3 (RS) Level 3; EN61000-4-4 (EFT) Level 4 EN61000-4-5 (Surge) Level 4; EN61000-4-6 (CS) Level 3 EN61000-4-8 (Magnetic Field) Level 4; EN50121-4
- **Shock** IEC 60068-2-27
- **Freefall** IEC 60068-2-32
- **Vibration** IEC 60068-2-6

L2 Features

- **L2 MAC Address** 16K
- **Jumbo Frame** 12KB
- **VLAN Group** 4K (VLAN ID 1~4094)
- **VLAN Arrange** Mac based VLAN, Protocol based VLAN, IP subnet based VLAN, Port based VLAN, Q-in-Q (VLAN Stacking), GVRP
- **Port Mirroring** Per port, Multi-source port
- **IP Multicast** IGMP Snooping v1/v2/v3, MLD Snooping, IGMP Immediate leave
- **Storm Control** Broadcast, Multicast, Unknown unicast
- **Spanning Tree** IEEE 802.1D-STP, IEEE 802.1s-MSTP, IEEE 802.1w-RSTP, X-Ring Pro

QoS

- **Priority Queue Scheduling** WRR (Weighted Round Robin), SP (Strict Priority), Hybrid Priority
- **Class of Service** IEEE 802.1p Based CoS, IP TOS, DSCP based CoS
- **Rate Limiting** Ingress Rate limit, Egress Rate limit
- **Link Aggregation** IEEE 802.3ad Dynamic Port Trunking, Static Port Trunking

Dimensions

Unit: mm

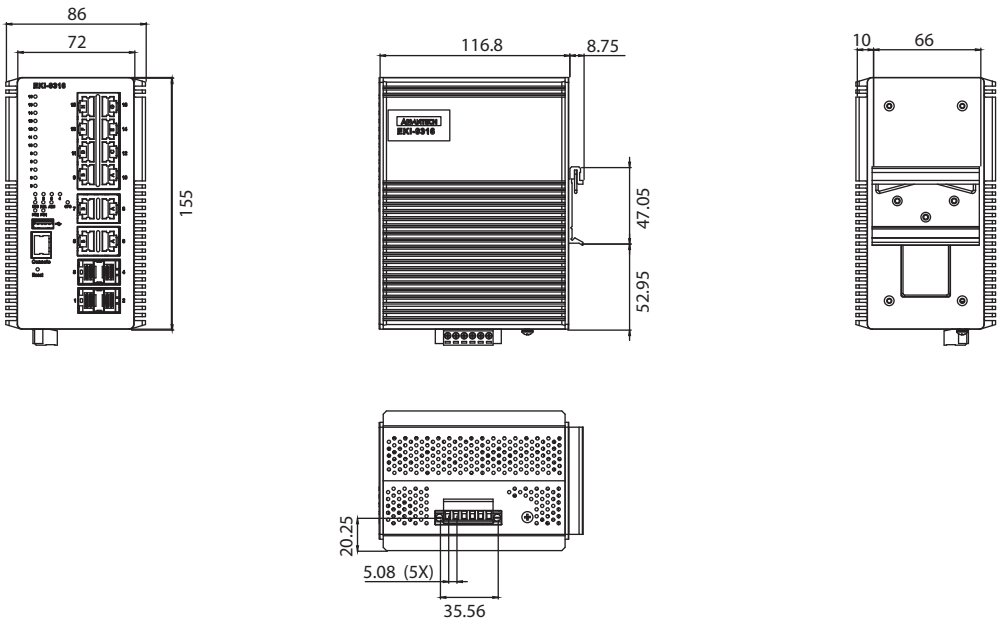

Security

- **Port Security** Static, Dynamic
- **Authentication** 802.1x (Port-Based, MAC-Based, MD5/TLS/TTLS/PEAP Encryption), RADUIS, TCACAS+
- **ACL** 1K rules
- **Advanced Security** IP Source guard, ARP inspection, DHCP Snooping

Management

- **DHCP** Client, Server, Relay, Option66/67/82
- **Access** SNMP v1/v2c/v3, WEB, Telnet, RMON, Standard MIB, Private MIB
- **Security access** SSH2.0, SSL
- **Software upgrade** TFTP, HTTP, Dual Image
- **NTP** NTP client/server

Ordering Information

- **EKI-9316-C0ID42E** Layer 2 Fastpath, 12xGbE 100/1000Base-T + 4x GbE SFP w/ 24/48 V_{DC} Redundant Power Input

Contact our sales for more pricing & ordering information.