MIC-770 V2

Compact Fanless System with 10th Gen Intel® Xeon®/Core™ i CPU Socket (LGA 1200)



Features

- Intel® 10th Gen Xeon®/Core™ i CPU socket-type (LGA1200) with Intel® W480E/H420E chipset
- Wide operating temperature (-10 ~ 60 °C)
- VGA and HDMI output
- 2 x GigaLAN, 2 x USB 3.2 (Gen2) and 6 x USB 3.2 (Gen1)
- 2 x RS-232/422/485 and 4 x RS232 serial ports (Optional)
- 1 x 2.5" HDD/SSD, and 1 x mSATA
- 9 ~ 36 V_{DC} input power range
- IP40 dust proof for deployment in harsh environment
- Supports FlexIO and iDoor technology, flexible configure additional HDMI, DVI, Comport, DIO, Remote switch IO
- Supports Advantech i-Modules
- Supports Advantech SUSIAPI and embedded software APIs
- Supports Intel® vPro™/AMT and TPM technologies
- Advantech iBMC remote out-of-band power management solution with WISE-DeviceOn
- Microsoft Azure PnP, AWS IoT Greengrass, Ubuntu Certified

Specifications

10th Generation Processor (TDP 35W)	CPU	W-1290TE*	W-1270TE*	W-1250TE*	i9-10900TE	i7-10700TE	i5-10500TE	i3-10100TE	G6400TE	G5900TE
	Core/Thread number	10/20	8/16	6/12	10/20	8/16	6/12	4/8	2/4	2/2
	Base Frequency	1.80 GHz	2.00 GHz	2.40 GHz	1.80 GHz	2.00 GHz	2.30 GHz	2.30 GHz	3.20 GHz	3.00 GHz
	Max Tirbo Frequency	4.50 GHz	4.40 GHz	3.80 GHz	4.50 GHz	4.40 GHz	3.70 GHz	3.60 GHz		
	L3 Cache	20 MB	16 MB	12 MB	20 MB	16 MB	12 MB	6 MB	4 MB	2 MB
	Temperature	-10 ~ 60 °C (w/ industrial wide-temp SSD, 0.7m/s air flow)								
	Chipset	W480E/H420E *Xeon CPU supported by W480E SKU. G6400TE/G5900TE CPU supported by H420E only.								
	BIOS	AMI SPI Flash 256Mb for W480E SKU, 128Mb for H420E SKU								
10th Generation Processor (TDP 65W)	CPU	i9-10900E	i7-10700E	i5-10500E	i3-10100E	G6400E (58W)	G5900E (58W)			
	Core/Thread number	10/20	8/16	6/12	4/8	2/4	2/2			
	Base Frequency	2.80 GHz	2.90 GHz	3.10 GHz	3.20 GHz	3.80 GHz	3.20 GHz			
	Max Tirbo Frequency	4.70 GHz	4.50 GHz	4.20 GHz	3.80 GHz					
	L3 Cache	20 MB	16 MB	12 MB	6 MB	4 MB	2 MB			
	Temperature	-10 ~ 50 °C (w/ industrial wide-temp SSD, 0.7m/s air flow)								
	Chipset	W480E/H420E *G6400E/G5900E CPU supported by H420E only.								
	BIOS	AMI SPI Flash 256Mb for W480E SKU, 128Mb for H420E SKU								
Memory	Technology	Dual-channel DDR4 2933/2666 MHz (W480E SKU with W and i3 CPU supports ECC)								
	Socket	2 x 260-pin DDR4 SODIMM (up to 32GB per socket)								
	Maximum Capacity	64GB								
Display	Chipset	Xeon and Core i: Intel® HD Graphics 630, supports DirectX 12 Pentium/Celeron: Intel® HD Graphics 610, supports DirectX 12								
	VGA	1 x DB15, up to 1920 x 1200 maximum resolution								
	HDMI	1 x HDMI, up to 3840 x 2160 @30Hz (with Flex I/O for 2nd HDMI, 1 x DVI or 1 x DP)								
	Multiple Display	W480E: 3 x independent displays (third display output via Flex I/O) H420E: 2 x independent displays								
Ethernet	Controller	W480E LAN1: Intel® I219LM, LAN2: Intel® i210IT (iBMC supported) H420E LAN1: Intel® I219V, LAN2: Intel® i210IT								
	Interface	2 x RJ45								
Storage	HDD	1 x 2.5" HDD/SSD (up to 2 x 2.5" SSD by optional kit; 2 x 3.5" HDD by i-Module)								
	mSATA	1								
	RAID	0/1/5/10 (W480E SKU only)								
	SATA Conn.	W480E: 3 x SATA signal, 3 x SATA power H420E: 2 x SATA signal, 2 x SATA power								
I/O	USB	W480E: 2 x USB3.2 (Gen2), 6 x USB3.2 (Gen1), 1 x USB 2.0 (Internal) H420E: 4 x USB3.2 (Gen1), 4 x USB2.0								
	Serial Port	2 x DB9, RS-232/422/485 support auto flow control; 4 x RS-232 (Optional)								
	Audio	2 (1 x line out and 1 x mic in)								
Expansion	Module	Supports Advantech i-Modules								
	Mini PCIe/mSATA	W480E: 1 x mini PCIe (via Nano-SIM), 1 x mini PCIe/mSATA H420E: 1 x mini PCIe (via Nano-SIM), 1 x mSATA								
LED and Switch	LED	2 (1 x Storage and 1 x Power), 4 for COM1 TX/RX and COM2 TX/RX								
	Button	1 x Power on/off switch								
	Remote Switch	Yes, 2pin terminal block (Optional)								

Specifications (Cont.)

Power	Type	ATX/AT		
	Input Voltage	9 ~ 36 V_{DC}		
	Power consumption	Typical: 35.3W Maximum: 112W		
Watchdog Timer	Output	System reset		
	Interval	Programmable 1 ~ 255 sec/min		
Environment	Temperature	65W CPU w/ industrial wide Temp. SSD	35W CPU w/ industrial wide Temp. SSD	Non-operating
		-10 ~ 50 °C with 0.7 m/s air flow	-10 ~ 60 °C with 0.7 m/s air flow	-40 ~ 85 °C
	Humidity	95% @ 40 °C (non-condensing)		
	Vibration	With SSD: 3 Grms @ 5 ~ 500 Hz, random, 1 hr/axis With 2.5" HDD: 1 Grms @ 5 ~ 500 Hz, random, 1 hr/axis		2G
	Shock	With SSD: 20G, IEC-68-2-27, half-sine wave, 11 ms duration		50G 11 ms
Mechanical	Dimensions (W x H x D)	77 x 192 x 230 mm (3.07" x 7.55" x 9.05")		
	Weight	2.8 kg (6.17 lbs)		
	Installation	Desktop/wall mount		
Certifications	EMC	CE/FCC Class A, CCC, BSMI		
	Safety	CB/UL, CCC, BSMI, RED Compliance Note: RED Compliance is bundled with MIC-770W-20A1 (standard unit) , **EXM-CMPF1-M2E01E** (Mini-PCIe to M.2 adapter), and **EWM-W192K1** (Intel WiFi-AC9260 M.2 2230 module+cable+antenna), i-Module is not included. EWM-W192K1 includes Module: EWM-W192M201E*1, Cable: 1750007965-01*2, and Dipole antenna: 1750008717-01*2.		
OS Support		Windows 10, Windows 10 IoT, Linux OS, Ubuntu 20.04		

Dimensions

Unit: mm

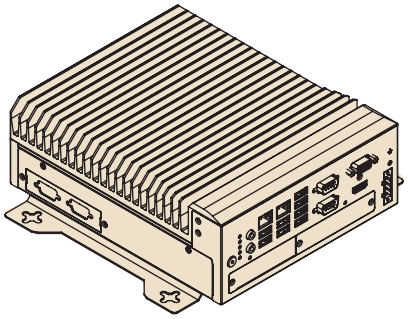

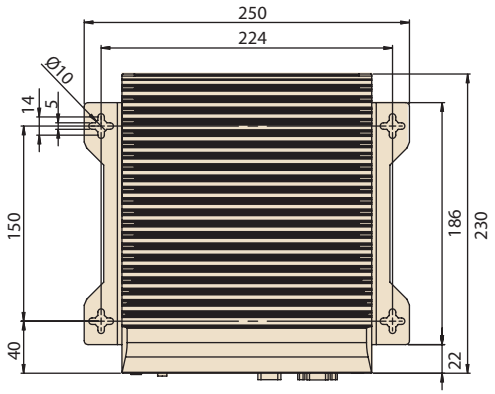

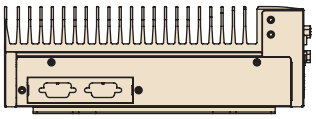

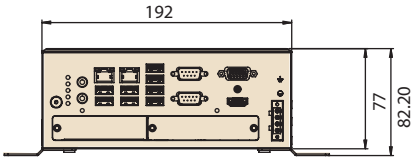

Front View

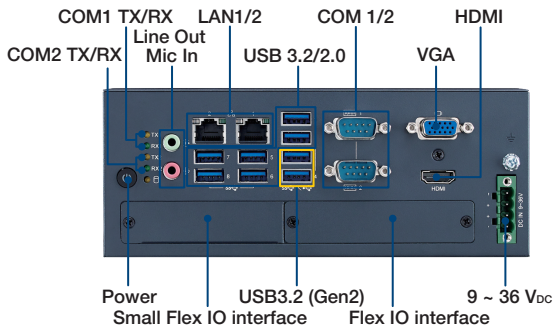

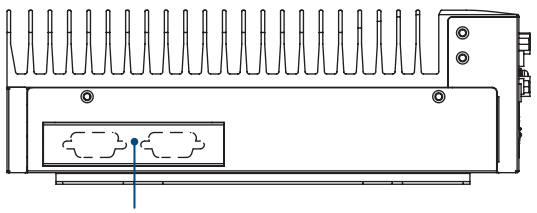

iDoor or 2 x RS-232 expansion slots

Ordering Information

Part Number	VGA	HDMI	2.5" HDD/SSD	mSATA	USB3.2 (Gen2)	USB3.2 (Gen1)	USB 2.0	GbE	COM	PCIe	Power
MIC-770W-20A1	1	1	1	1	2	6	0	2	2, up to 6 (Optional)	i-Module (optional)	9 ~ 36V_{DC}
MIC-770H-20A1	1	1	1	1	0	4	4	2	2, up to 6 (Optional)	i-Module (optional)*	9 ~ 36V_{DC}

*MIC-770H does not support MIC-75M40, MIC-75M20-01 and MIC-75G30

Packing List

Part Number	Description	Quantity
MIC-770 V2	MIC-770 V2 barebone system	1
2041077030	MIC-770 V2 startup manual (EN+TC+SC)	1
1652003234	4-pin Phoenix power connector	1
1960070543T005	2 x Mounting bracket	2
1700013095-01	SATA cable	1
1700024372-01	SATA power cable	1
2170000093-01	CPU thermal grease	1
1990019498N000	RAM thermal pad	2

Optional i-Modules*

Part Number	Description
MIC-75M10-00A2	1-slot expansion module (1 x PCIe)
MIC-75M11-00A2	2-slot expansion module (1 x PCIe and 1 x PCI slots)
MIC-75M13-00A2	4-slot expansion module (1 x PCIe and 3 x PCI slots)
MIC-75M20-00C1	2-slot expansion module (2 x PCIe slots)
MIC-75M20-01A2**	2-slot expansion module (2 x PCIe slots)
MIC-75M40-00A2**	4-slot expansion module (4 x PCIe slots)
MIC-75G20-10A2	GPU card expansion module (2 x PCIe and 2 x removable 2.5" storage bay)
MIC-75G30-00A2**	Dual GPU card expansion module (3 x PCIe and 2 x removable 2.5" storage bay, 1 x HDMI, 1 x DP)
MIC-75GF10-00A1	MXM GPU expansion module (1 x MXM, 1 x PCIe and 2 x removable 2.5" storage bay, 1 x HDMI, 3 x DP)
MIC-75S00-00A1	2 x removable 2.5" storage bay
MIC-75S20-00A2	2-slot expansion storage module (2 x PCIe and 2 x removable 2.5" storage bay)
98R17520301	2 x 3.5" HDD kit

*Please refer to i-Module datasheet for more detail.
** W480E SKU only

Embedded OS

Part Number	Description
20706WX9HS0120	img MIC-770V2H Win10 IoT Ent 2019 64b 1809, High End
20706WX9VS0124	img MIC-770V2H Win10 IoT Ent 2019 64b 1809, Value
20706WX9ES0134	img MIC-770V2H Win10 IoT Ent 2019 64b 1809, Entry
20706WX9HS0121	img MIC-770V2W Win10 IoT Ent 2019 64b 1809, High End
20706WX9VS0125	img MIC-770V2W Win10 IoT Ent 2019 64b 1809, Value
20706WX9ES0135	img MIC-770V2W Win10 IoT Ent 2019 64b 1809, Entry
20706U20DS0015	img Ubun20.4 MIC-770V2W 64b 2004 ENU

Optional Accessories

Part Number	Description
	Adaptor
96PSA-A230W24P4-3*	ADP A/D 100-240V 230W 24V C14 TERMINAL BLOCK 4P
96PSA-A150W19P4-3	ADP A/D 100-240V 150W 19V C14 TERMINAL BLOCK 4P
1702002600	Power cord (USA) UL/CSA, 3-pin, 10A, 125V, 1.83 M, 180 D
1700022940-01	Power cord PSE, 3-pin, 7A, 125V, 3M, DAC-ST01
1702002605	Power Cord (EU), 3-pin, 10A, 250V 1.83M, 90D
	Din Rail PSU
96PSD-A240W24-MN	A/D 100-240V 240W 24V NDR DIN RAIL
1700031170-01	DC-DC power cord, A cable TEM*4/TEM*4 UL2464 18AWG 150cm
1700029720-01	AC-DC power cord (US), M cable AC CONN 3P 183cm
1700030520-01	AC-DC power cord (CN), M cable conn 3P CCC 10A 250V 150cm
1700031408-01	AC-DC power cord (EU), M cable conn 3P/G-TEM*3 80CM

* Please use 230W adaptor when i-Module is added.
Note:
1. MIC-770 V2 supports Advantech iDoor modules (both MOS and PCM series), excluding the PoE model.
2. The **PCM** series module requires a bracket (P/N: **1960065854N001**) that must be ordered separately.

Optional Flex I/O* & Kits

Part Number	Description
	Flex I/O
AIIS-DIO32-00A1E**	AIIS GPIO module (32 bit)
PCA-TPM-00B1E	TPM 2.0 module
98R17500001	MIC DVI FIO
98R17500101	MIC HDMI/Remote power on/off FIO
98R17500301	MIC HDMI kit FIO
98R17500401	MIC Remote power on/off FIO
98R17500601	MIC COMport kit FIO
98R17500701	MIC Remote power on/off kit for SFIO
98R17500801	MIC Reset/Remote power on/off/5VDC kit FIO
98R17500901	MIC GPIO kit FIO
98R17501001	MIC DP kit FIO
	Advanced Flex I/O* **
98910770301	MIC NVMe + 4 LAN Advanced FIO
98910770401	MIC NVMe Advanced FIO
98910770501	MIC 4 PoE Advanced FIO
	Storage Kit
98R1752010E	2nd 2.5" HDD/SSD kit (used in 2-slot i-Module)
98R1752020E	2 x 2.5" SSD kit (7mm thick SSD, used insides of MIC-770 V2)
	Mounting Kit
98R17500210	MIC Din Rail Mounting kit
98R17500501	MIC Wall Mounting kit

* Please refer to Flex I/O datasheet for more detail.
** AIIS-DIO32 requires a DB37 bracket (P/N: 1960068787N002)
*** W480E SKU only