MIO-5251

Intel® Celeron J1900 & Atom™ E3825/ E3845, 3.5" MI/O-Compact SBC, DDR3L, VGA, HDMI/DP, 48-bit LVDS/eDP, 2GbE, Mini PCIe, mSATA/SD card, iManager, MIOe

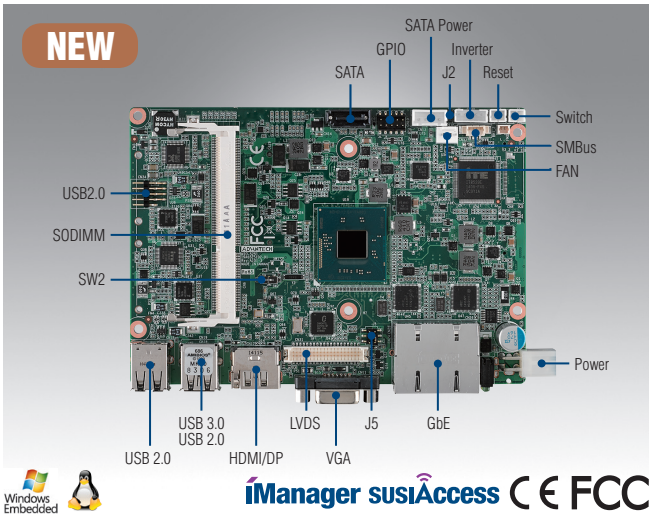

Features

- Intel® Celeron J1900 & Atom™ E3825/E3845, DDR3L-1066/1333MHz SODIMM up to 8GB
- DirectX11, OpenGL3.2, OpenCL1.2, multi-display: VGA+LVDS/eDP+ HDMI/ DP*
- Flexible design using integrated multiple I/O: MIOe to approach vertical applications & keep domain knowhow
- 2 Intel i210 GbE, rich I/O: 4COM, SATA, USB3.0, SMBus/I²C, GPIO full-size Mini PCIe w/ SIM holder, full-size mSATA or SD card
- Supports iManager, SUSIAccess and Embedded Software APIs

Software APIs: GPIO, H/W Monitor, Brightness, Watchdog, Backlight On/Off, SMBus/ I²C, CPU Speed, System Throttling

Utilities: Monitoring

Specifications

Processor System	CPU	Intel Celeron J1900	Intel Atom E3845	Intel Atom E3825
	Base Frequency	2 GHz (Quad-Core)	1.91GHz (Quad-Core)	1.33 GHz (Dual-Core)
	Burst Frequency	2.42 GHz	-	-
	L2 Cache	2MB	2MB	1MB
	BIOS	AMI UEFI BIOS at 64 Mb		
Memory	Technology	DDR3L 1333 MHz	DDR3L 1333MHz	DDR3L 1066 MHz
	Max. Capacity	8 GB		
	Socket	1 x 204-pin SODIMM		
Display	Controller	Intel Gen7 graphic engine		
	Graphic Features	DirectX11, OpenGL3.2, OpenCL1.2 HW Decode: H.264, MPEG2, MVC, VC-1, WMV9, MJPEG and VP8. HW Encode: H.264 (MPEG2 and MVC only for J1900)		
	VGA	2560 x 1600 at 60Hz		
	LVDS	48-bit LVDS up to WUXGA 1920 x 1200 at 60Hz Supports 3.3/5/12V for VDD power, 5/12V for inverter		
	eDP*	up to 2560 x 1600 at 60Hz		
	HDMI / DisplayPort*	HDMI 1.4a for HD video playback, 1080P at 60Hz Displayport*, up to 2560 x 1600 at 60Hz		
	Mulit-Display	VGA + HDMI/Displayport*, VGA+ LVDS/eDP*, HDMI/Displayport* +LVDS/eDP		
Ethernet	Speed	10/100/1000Mbps		
	Controller	Intel i210		
	Connector	2 RJ45		
Audio	Codec	Realtek ALC888S, High Definition Audio (HD), Line-in, Line out, Mic-in		
	Amplifier*	Optional via MIOe		
WatchDog Timer		Output System reset, Programmable counter from 1 ~ 255 minutes/ seconds		
Storage	SATA	1, up to 3Gb/s (300 MB/s)		
	mSATA	1 x Full-size		
	SD slot*	1 (Shared with mSATA), only support on E3825/E3845		
Rear I/O	Ethernet	2 (10/100/1000Mbps)		
	VGA	1		
	HDMI / DisplayPort*	1		
	USB 2.0	3		
	USB 3.0	1		
	LED	Power, HDD		
	DC Jack*	1		
Internal I/O	Serial	2 x RS-232 from COM1/2, 2 x RS-232/422/485 from COM3/4 with auto flow control (ESD protection: air gap ±15kV, contact ±8kV)		
	USB2.0	1		
	I²C	1 (Shared with SMBus pin)		
	SMBus	1		
	GPIO	8-bit (5V tolerance)		
Expansion	Mini PCIe	1 x Full-size with SIM holder		
	MIOe	SMBus, 3 x USB2.0, LPC, 1 x PCIe x1, line out, DisplayPort*, +5 Vsb/+12 Vsb power, Power On, Rest		
Power	Power Type	Single 12V DC power input		
	Power Supply Voltage	12V ± 10%		
	Power Consumption (Typical)	MIO-5251J-U0A1E: 0.62A @12V (7.44W) MIO-5251EW-S9A1E: 0.51A @12V (6.12W) MIO-5251E-S3A1E: 0.39A @12V (4.68W)		
	Power Consumption (Max, test in HCT)	MIO-5251J-U0A1E: 1.16A @12V (13.92W) MIO-5251EW-S9A1E: 0.92A @12V (11.04W) MIO-5251E-S3A1E: 0.78A @12V (9.36W)		
	Power Management	ACPI		
	Battery	Lithium 3 V / 210 mAH		
Environment	Operating	Standard: 0 ~ 60° C (32 ~ 140° F), Extend: -40 ~ 85° C (-40 ~ 185° F) Storage: -40 ~ 85° C (-40 ~ 185° F)		
	Non-Operating	-40 °C ~ 85 °C and 60 °C @ 95% RH Non-Condensing		
Physical Characteristics	Dimensions (L x W)	146 x 102 mm (5.7" x 4"), same as 3.5"		
	Weight	0.5kg (1.1lb), weight of total package		
	Height	Top Side: 19 mm; Bottom Side: 6.8 mm; PCB: 1.6 mm		

* This specification is supported by request

All product specifications are subject to change without notice.

Last updated: 13-Sep-2018

Block Diagram

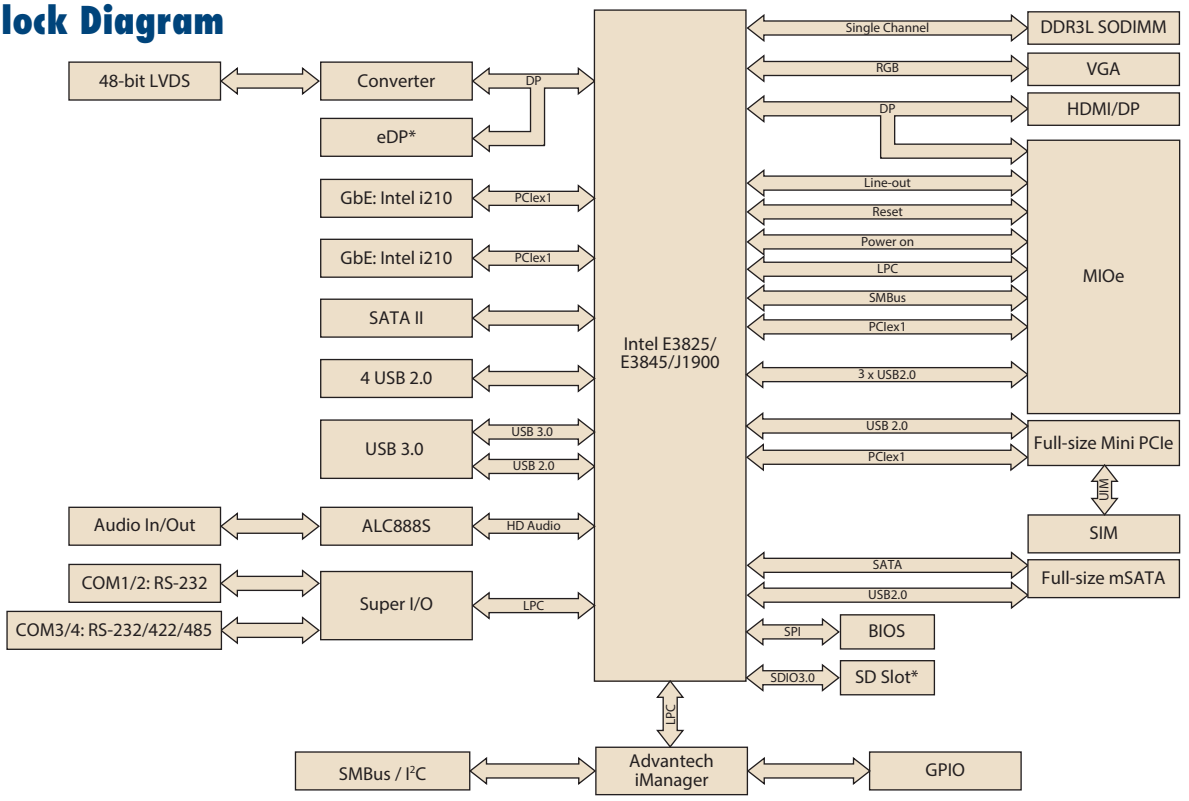

*: Supported by request

Ordering Information

Part No.	CPU	L2 Cache	Memory	LVDS	VGA	HDMI/DP	GbE	Audio	RS-232/ 422/485	RS-232	USB 3.0	USB 2.0	SATAII	Mini PCIe	mSATA	MIOe	Power connector	Thermal Solution*	Operating Temp.
MIO-5251J-U0A1E	Intel J1900 2GHz 10W	2MB	SODIMM	48-bit	Yes	1	2	Yes	2	2	1	4	1	Full-size	Full-size	Yes	2x2pin	Passive	0°C~60°C
MIO-5251E-S3A1E	Intel E3825 1.33GHz 6W	1MB	SODIMM	48-bit	Yes	1	2	Yes	2	2	1	4	1	Full-size	Full-size	Yes	2x2pin	Passive	0°C~60°C
MIO-5251EW-S9A1E	Intel E3845 1.91GHz 10W	2MB	SODIMM	48-bit	Yes	1	2	Yes	2	2	1	4	1	Full-size	Full-size	Yes	2x2pin	Passive (higher)	-40°C~85°C
MIO-5251JZ-2GA1E	Intel J1900 2GHz	2MB	2GB bundled	48-bit	Yes	1	2	Yes	2	2	1	4	1	Full-size	Full-size	Yes	2x2pin	Passive (higher)	-20°C~80°C
MIO-5251JZ2-2GA1E	Intel J1900 2GHz	2MB	2GB bundled	48-bit	Yes	1	2	Yes	2	2	1	4	1	Full-size	Full-size	Yes	2x2pin	Passive (higher)	-40°C~85°C

Note1: J1900 and E3845/E3825 with different version BIOS and only for 64bit Win8/Win7, 32bit supported by T-P/N. (Default setting is Legacy boot)
Note2: passive=fanless

Packing List

Part No.	Description	Quantity
	MIO-5251 SBC	1
2006525100	Startup Manual	1
1700006291	M Cable SATA 7P/SATA 7P 30cm C=R 180/90	1
1700018785	SATA 35cm power cable	1
1701200220	COM RS-232 Cable 2*10P-2.0/D-SUB 9P (M)*2 22CM	2
1700019584	Audio Cable 2*5P-2.0/JACK*3 20cm	1
9689000002	mini Jumper pack	1
1960062791T001	Heatsink (104 x 83 x 19 mm) for MIO-5251E/J	1
1960066556T001	Wide temp. heatsink (145.4 x 84.2 x 29 mm) for MIO-5251JZ/JZ2/EW	1

Optional Accessories

Part No.	Description
1960065073N001	Heat spreader (16.7mm height)
96PSA-A60W12R1-1	ADP 100-240V 60W 12V WO/PFC
1703100264	Internal 1 port USB cable 22.5cm

Embedded OS/API

Embedded OS/API	Part No.	Description
WE8S	2070013167	64bit (ENG/T-CH/S-CH/JP)
WES7E	2070013061	64bit (ENG/T-CH/S-CH/JP)
WEC7	2070013993	img WEC7 MIO-5251 v1.0 EN
Linux		Ubuntu 14.04
VxWorks		6.9.3.3
Android		Kit Kat 4.4
Software API		iManager 2.0

Rear I/O View

