PCE-4128

LGA 1150 4th Gen Intel® Xeon® and Core™ i7/i5/i3 Half-size SHB with PCIe 3.0/Triple independent display/Dual GbE LAN/SATA 3.0/m-SATA/ USB 3.0

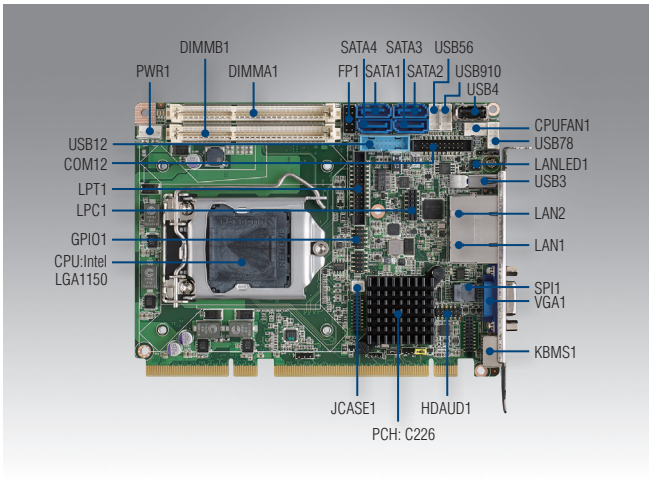

Features

- Complies with PICMG 1.3
- Supports Intel Xeon E3 1200v3 series, Core i7/i5/i3 LGA1150 processors with C226
- Dual Channel DDR3 1066/1333/1600 up to 16 GB
- Supports PCIE 3.0, USB 3.0, SATA3.0, SW Raid 0, 1, 5, 10
- Supports triple displays
- Support dual 10/100/1000 Mbps Ethernet
- Supports out-of-band remote management with AMT9.0
- Supports Advantech TPM module (LPC I/O)
- Supports SUSIAccess and Embedded Software APIs

CE FCC

Specifications

Processor System	CPU	E3-1275v3	E3-1225v3	E3-1268v3	i5-4570TE	i3-4360	i3-4330	i3-4330TE	G3420	G3320TE	G1820	G1820TE
	Base Frequency	3.5GHz	3.2GHz	2.3GHz	2.7GHz		3.5GHz	2.4GHz	3.2 GHz	2.3 GHz	2.7 GHz	2.2 GHz
	L3 Cache	8MB	8MB	8MB	4MB		4MB	4MB	3MB	3MB	2MB	2MB
	SKU/Chipset	Intel C226										
	BIOS	AMI 128Mbit SPI Flash										
Bus	PCI-Express	Two x8 or one x16, plus four x1 to backplane										
Memory	Technology	Dual channel DDR3 ECC 1066/1333/1600 MHz (ECC function enable depends on processor support)										
	Max. Cap.	16 GB (8 GB per DIMM)										
	Socket	DDR3 204-pin SO-DIMM X2										
Graphics	Controller	Chipset integrated Intel GT2 P4600 or GT2 4600 or GT1 HD graphics (Depends on CPU support)										
	VRAM	Shared system memory is subject to OS										
	CRT	Supports resolution up to 1920 x 1200 pixel at 60MHz										
	DP	Supports resolution up to 3840 x 2160 @ 60Hz										
	Triple Display	CRT + DP (Optional: PCE-SA01-00A1E)										
Ethernet	Interface	10/100/1000 Mbps										
	Controller	LAN 1: Intel I217LM LAN 2: Intel I210AT										
	Connector with LED	RJ45 x 2										
Rear I/O	USB 3.0	1										
	Ethernet	2										
	VGA	1										
	PS/2	1 (PS/2 Y cable supports 1 x keyboard and 1 x mouse)										
Internal Connector	USB	Seven USB2.0 (6 pin headers + 1 USB Type A); Three USB3.0 (1 on rear IO + 2 pin header)										
	SATA 3.0	4 (600 MB/sec, supports S/W RAID 0,1, 5, 10)										
	COM	2										
	Parallel	1										
	GPIO	8 bit										
Watchdog Timer	Output	System reset										
	Interval	Programmable 1-255 sec										
Miscellaneous	Audio	Intel High Definition audio interface (required an audio extension module P/N: PCA-AUDIO-HDA1E)										
Power Requirement	Test environment	Intel Xeon E3-1275 v3 (3.5GHz), DDR3 1600 8GB *2										
	Voltage	12V	5V	3.3V	5VSB		-5V	-12V				
	Current	7.36	0.96	0.83	0.13		0	0				
Environment		Operating						Non-operating				
	Temperature/Humidity	0 ~ 60 °C (32~140 °F); Depends on CPU frequency and cooler solution Operating humidity: 40 °C @ 85% RH Non-Condensing						-40 ~ 85 °C and 60 °C @ 95% RH Non-Condensing				
Physical	Dimensions (L x H)	167.64 x 126.39 mm (6.6" x 4.98")										

All product specifications are subject to change without notice.

Board Diagram

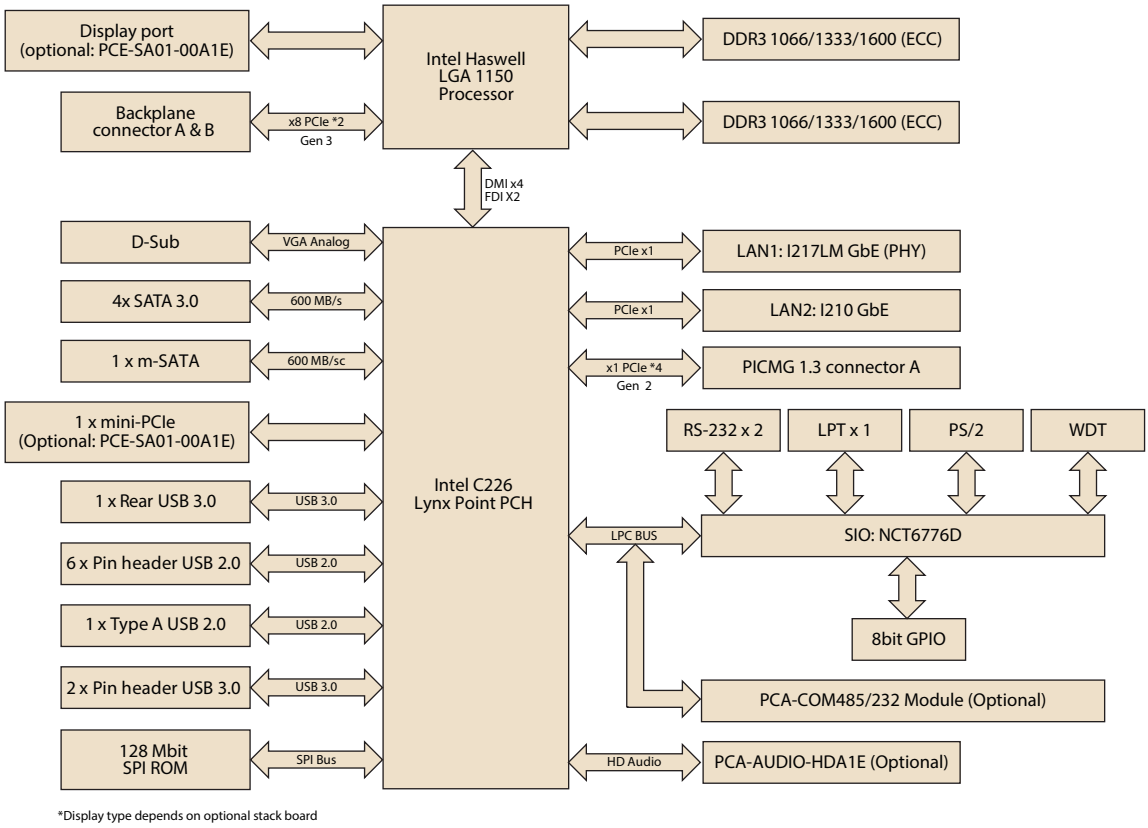

*Display type depends on optional stack board

Ordering Information

Part Number	PCH	Memory	Backplane	LAN	VGA	DP	COM	SATA III	USB 2.0	USB 3.0	m-SATA	mini-PCIe	S/W Raid	AMT
PCE-4128G2-00A1E	C226	ECC	PCE-3BXX PCE-4BXX	2	1	1*	RS-232 x2 onboard Optional RS-422/485 x4, or RS-232 x4 via module	4	7	3	1	1*	Yes	Yes

*Optional: PCE-SA01-00A1E. PCE-SA01-00A1E is compatible with IPC-3026/IPC-6806S/ACP-4D00/ACP-4020, but not compatible with IPC-3012.

Packing List

Part Number	Description	Quantity
1700003194	Serial ATA HDD data cable	x1
1703150102	Serial ATA HDD power cable	x1
1700008762	2-port COM cable	x1
1700002223	1-port LPT cable	x1
1700060202	Keyboard and mouse Y-cable	x1
1700014398	4-port USB cable kit	x1
1700020277-01	2 ports USB3.0 cable W/BKT	x1
1703040100	Power converter	x1
9689000002	Jumper package	x1
2190000902	Warranty Card	x1
2006302800	Startup manual	x1
2066302800	Utility CD	x1

Optional Accessories

Part Number	Description
PCA-COM485-00A1E	4 x RS-244/485 module
PCA-COM232-00A1E	4 x RS-232 module
PCA-AUDIO-HDA1E	Audio module with Realtek ALC-888
PCA-AUDIO-HDB1E	Audio module with Realtek ALC-892
PCA-TPM-00A1E	TPM module (Trust Platform management)
PCE-SA01-00A1E	I/O extension stack board
1960047831N001	2U cooler for Xeon E3-1275v3, E3-1225v3, E3-1268v3, i7-4770S, i7-4770TE, i5-4570S, i5-4570TE, i3-4330, i3-4330TE, G3420, G3220TE, G1820, G1820TE
1960053207N001	1.5U cooler for i7-4770S, i7-4770TE, i5-4570S, i5-4570TE, i3-4330, i3-4330TE, G3420, G3220TE, G1820, G1820TE
1960053065N001	1U blower for i5-4570S, i5-4570TE, i3-4330, i3-4330TE, G3420, G3220TE, G1820, G1820TE

I/O View



PCE-4128G2-00A1E