PCM-9366

Intel® Pentium N4200, Celeron N3350 & Atom™ E3950, 3.5" MI/O SBC

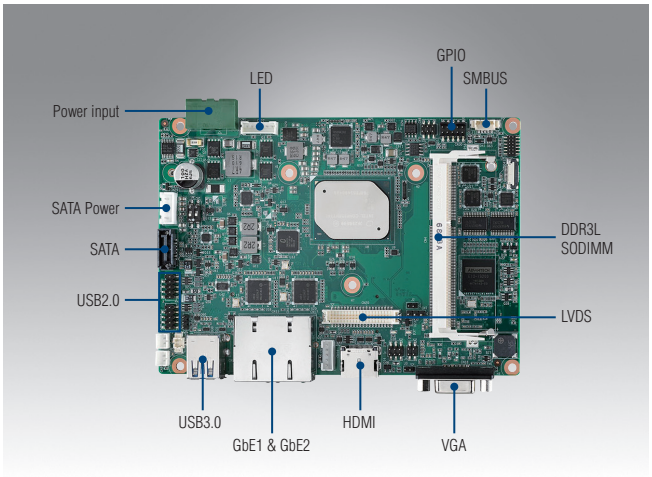

Features

- Intel® Pentium N4200, Celeron N3350 & Atom™ E3950
- 1 x DDR3L-1866/1600 SODIMM, up to 8GB
- DirectX11, OpenGL3.2, OpenCL1.2, multi-display: VGA+LVDS/eDP+ HDMI/DP*
- Support 9-36V wide range power input
- 2 GbE, rich I/O: 4COM, SATA, USB3.0, SMBus/I²C, 2 8bit GPIO, 2 CANBUS, M.2 key E, full-size mSATA
- Supports iManager, SUSIAccess and Embedded Software APIs

Software APIs: GPIO, H/W Monitor, Brightness, Watchdog, Backlight On/Off, SMBus, CPU Speed, System Throttling

Utilities: Monitoring

Windows Embedded, iManager, SUSIAccess, CE, FCC

Specifications

Processor System	CPU	Intel Pentium 4200	Intel Celeron N3350	Intel Atom E3950
	Base Frequency	1.1 (Quad-Core)	1.1 (Dual-Core)	1.6 (Quad-Core)
	Max Turbo Frequency	2.5 GHz	2 GHz	1.8 GHz
	L2 Cache	2MB	2MB	2MB
	BIOS	AMI UEFI BIOS at 64 Mb		
Memory	Technology	DDR3L 1867 MHz		
	Max. Capacity	8 GB		
	Socket	1 x 204-pin SODIMM		
Display	Controller	Intel Gen9 graphic engine		
	Processor Graphics	DirectX11, OpenGL3.2, OpenCL1.2 Full HW acceleration, decode: H.264, MPEG2/4, VC-1, WMV9. Encode: H.264, MPEG2		
	VGA	2560 x 1600 at 60Hz		
	LVDS	48-bit dual LVDS up to WUXGA 1920 x 1200 at 60Hz Supports 3.3/5/12V for VDD power, 1A@5V/12V for inverter		
	HDMI	HDMI 1.4a for HD video playback, 1080P at 60Hz		
	Mulit-Display	VGA + HDMI+ LVDS/eDP*		
Ethernet	Speed	10/100/1000Mbps		
	Controller	Intel i210		
	Connector	2 RJ45		
Audio	Codec	Realtek ALC888S, High Definition Audio (HD), Line-in, Line out, Mic-in		
TPM	TPM	TPM2.0 (Infineon SLB9665)		
WatchDog Timer		Output System reset, Programmable counter from 1 ~ 255 minutes/ seconds		
Storage	SATA	1, up to 6Gb/s (600MB/s)		
	mSATA	1 x Full-size		
Rear I/O	Ethernet	2 (10/100/1000Mbps)		
	VGA	1		
	HDMI	1		
	USB 3.0	2		
Internal I/O	Serial	RS232 x 2 (COM1/COM2), RS232/422/485 x 2 (COM3/COM4) with auto flow control (ESD protection: air gap ±15kV, contact ±8kV)		
	USB2.0	4		
	I²C	1 (Shared with SMBus pin)		
	SMBus	1		
	GPIO	2 x 8-bit		
Expansion	Mini PCIe	1 x Full size*		
	M.2	1 x M.2 Key E		
Power	Power Type	9-36V DC power input		
	Power Consumption (Typical)	TBD		
	Power Consumption (Max, test in HCT)	TBD		
	Power Management	ACPI		
	Battery	Lithium 3 V / 210 mAH		
Environment	Operational	0 ~ 60° C with 0.7m/s air flow (32 ~ 140° F) (Operational humidity: 40° C @ 95% RH Non-Condensing)		
	Non-Operational	-40° C ~ 85° C and 60° C @ 95% RH Non-Condensing		
Physical Characteristics	Dimensions (L x W)	146 x 102 mm (5.7" x 4"), same as 3.5"		
	Weight	0.54kg (1.19lb), weight of total package		
	Height	Top Side: 19.5 mm; Bottom Side: 7.8 mm; PCB: 1.6 mm		

* The specification is supported by request

All product specifications are subject to change without notice.

Last updated: 21-Apr-2023

Block Diagram

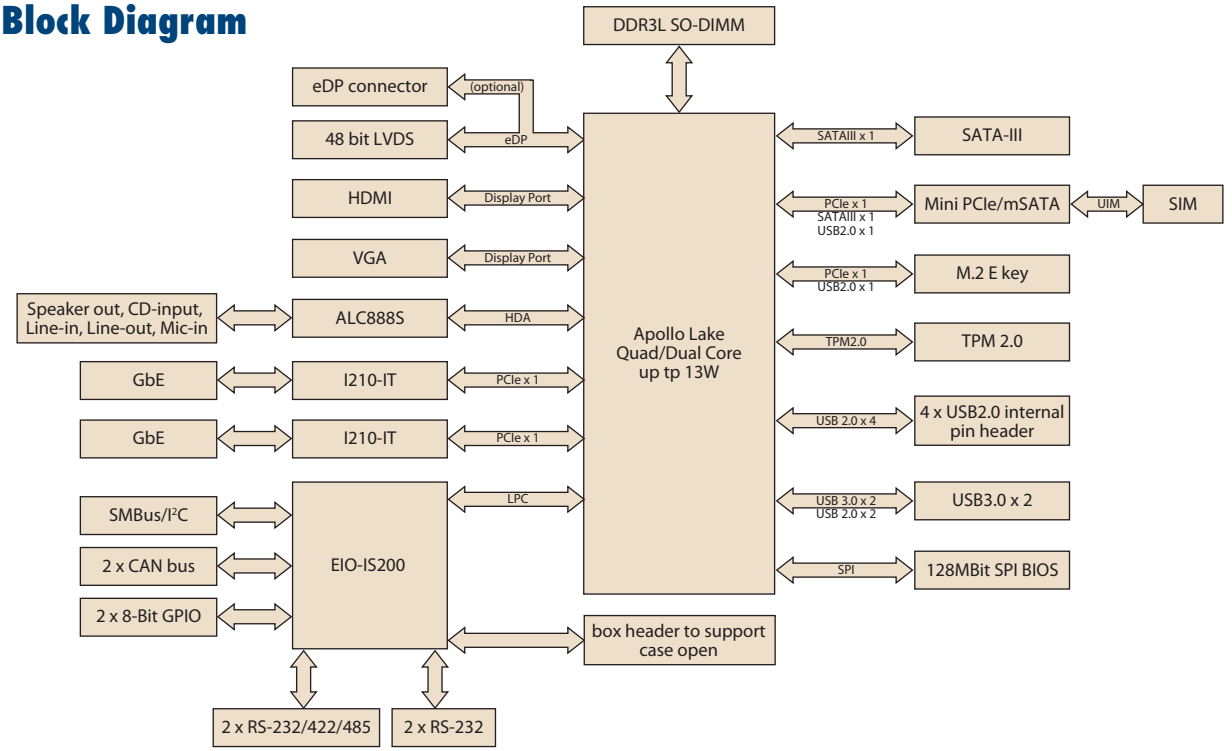

Note1: Supported by request

Ordering Information

Part No.	CPU	Memory	HDMI	LVDS	VGA	GbE	Audio	RS-232/ 422/485	RS-232	USB 3.0	USB 2.0	SATA III	M.2 Key E	Mini PCIe	mSATA	CANBUS	Power connector	Thermal Solution*	Operating Temp.
PCM-9366N-S1A2	N3350	SODIMM	1	48-bit	Yes	2	Yes	2	2	4	4	1	1	Full-size	Full-size	2	2P Phoenix power connector	Passive	0 ~ 60° C
PCM-9366N-S2A2	N4200	SODIMM	1	48-bit	Yes	2	Yes	2	2	2	4	1	1	Full-size	Full-size	2	2P Phoenix power connector	Passive	0 ~ 60° C
PCM-9366E-S7A2	E3950	SODIMM	1	48-bit	Yes	2	Yes	2	2	2	4	1	1	Full-size	Full-size	2	2P Phoenix power connector	Passive	0 ~ 60° C

Note: Passive=fanless; Active=with fan

Packing List

Part No.	Description	Quantity
	PCM-9366 SBC	1
2006936600	Startup Manual	1
1701200220	RS-232 COM cable, F Cable 2*10P-2.0/ D-SUB 9P(M)*2 22CM	2
1700018785	SATA 35cm power cable	1
1700019584	Audio Cable 2*5P-2.0/JACK*3 20cm	1
	mini Jumper pack	1
1700006291	M Cable SATA 7P/SATA 7P 30cm C=R 180/90	
1960078737T001	PCM-9366 heatsink for N4200/N3350	
1960078737T011	PCM-9366 heatsink for E3900 series	

Embedded OS/API

Embedded OS/ API	Part No.	Description
WIN10	20706WX9ES0069	img W10 19EL PCM-9366 64b 1809 ENU

Rear I/O View

