PCM-9366

Intel® Pentium N4200 Celeron N3350 & Atom™ E3950/E3940/E3930, DDR3L, HDMI, VGA, 48-bit LVDS/*eDP, 2GbE, M.2 Key E, Mini PCie/mSATA, M.2 Key E, wide range power input, iManager

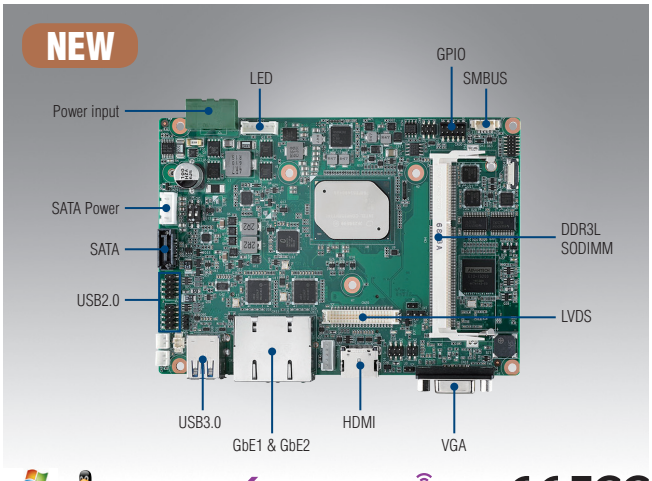

Windows Embedded

iManager SUSIAccess CE FCC

Features

- Intel® Pentium N4200 Celeron N3350 & Atom™ E3950/E3940/E3930, 1 x DDR3L-1600/1333 SODIMM support up to 8 GB
- DirectX11, OpenGL3.2, OpenCL1.2, multi-display: VGA+LVDS/eDP+ HDMI/DP*
- Support 9-36V wide range power input
- 2 GbE, rich I/O: 4COM, SATA, USB3.0, SMBus/I²C, 2 8bit GPIO, 2 CANBUS, M.2 key E, full-size mSATA
- Supports iManager, SUSIAccess and Embedded Software APIs

Software APIs: GPIO, H/W Monitor, Brightness, Watchdog, Backlight On/Off, SMBus/ I²C, CPU Speed, System Throttling

Utilities: Monitoring

Specifications

Processor System	CPU	Intel Penium 4200	Intel Celeron N3350	Intel Atom E3950	Intel Atom E3940	Intel Atom E3930
	Base Frequency	1.1 (Quad-Core)	1.1 (Dual-Core)	1.6 (Quad-Core)	1.6 (Quad-Core)	1.3 (Dual-Core)
	Max Turbo Frequency	2.5 GHz	2 GHz	1.8 GHz	1.8 GHz	
	L2 Cache	2MB	2MB	2MB	2MB	2MB
	BIOS	AMI UEFI BIOS at 64 Mb				
Memory	Technology	DDR3L 1867 MHz				
	Max. Capacity	8 GB				
	Socket	1 x 204-pin SODIMM				
Display	Controller	Intel Gen9 graphic engine				
	Processor Graphics	DirectX11, OpenGL3.2, OpenCL1.2 Full HW acceleration, decode: H.264, MPEG2/4, VC-1, WMV9. Encode: H.264, MPEG2				
	VGA	2560 x 1600 at 60Hz				
	LVDS	48-bit dual LVDS up to WUXGA 1920 x 1200 at 60Hz Supports 3.3/5/12V for VDD power, 1A@5V/12V for inverter				
	HDMI	HDMI 1.4a for HD video playback, 1080P at 60Hz				
	Mulit-Display	VGA + HDMI+ LVDS/eDP*				
Ethernet	Speed	10/100/1000Mbps				
	Controller	Intel i210				
	Connector	2 RJ45				
Audio	Codec	Realtek ALC888S, High Definition Audio (HD), Line-in, Line out, Mic-in				
WatchDog Timer		Output System reset, Programmable counter from 1 ~ 255 minutes/ seconds				
Storage	SATA	1, up to 6Gb/s (600MB/s)				
	mSATA	1 x Full-size				
Rear I/O	Ethernet	2 (10/100/1000Mbps)				
	VGA	1				
	HDMI	1				
	USB 3.0	2				
Internal I/O	Serial	RS232 x 2 (COM1/COM2), RS232/422/485 x 2 (COM3/COM4) with auto flow control (ESD protection: air gap ±15kV, contact ±8kV)				
	USB2.0	4				
	I²C	1 (Shared with SMBus pin)				
	SMBus	1				
	GPIO	2 x 8-bit				
Expansion	Mini PCIe	1 x Full size*				
	M.2	1 x M.2 Key E				
Power	Power Type	9-36V DC power input				
	Power Consumption (Typical)	TBD				
	Power Consumption (Max, test in HCT)	TBD				
	Power Management	ACPI				
	Battery	Lithium 3 V / 210 mAH				
Environment	Operational	0 ~ 60° C with 0.7m/s air flow (32 ~ 140° F) (Operational humidity: 40° C @ 95% RH Non-Condensing)				
	Non-Operational	-40° C ~ 85° C and 60° C @ 95% RH Non-Condensing				
Physical Characteristics	Dimensions (L x W)	146 x 102 mm (5.7" x 4"), same as 3.5"				
	Weight	0.54kg (1.19lb), weight of total package				
	Height	Top Side: 19.5 mm; Bottom Side: 7.8 mm; PCB: 1.6 mm				

* The specification is supported by request

All product specifications are subject to change without notice.

Last updated: 10-May-2018

Block Diagram

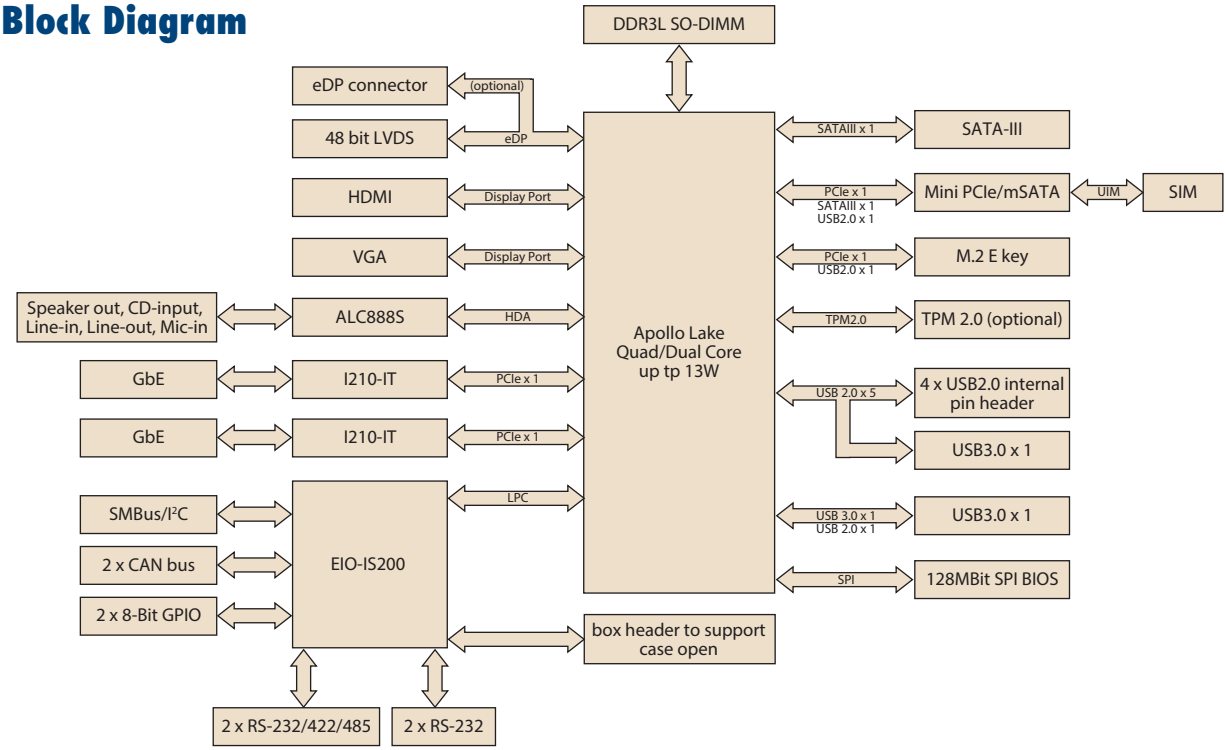

Note1: Supported by request

Ordering Information

Part No.	CPU	Memory	HDMI	LVDS	VGA	GbE	Audio	RS-232/ 422/485	RS-232	USB 3.0	USB 2.0	SATA III	M.2 Key E	Mini PCIe	mSATA	CANBUS	Power connector	Thermal Solution*	Operating Temp.
PCM-9366N-S2A1E	Intel N4200	SODIMM	1	48-bit	Yes	2	Yes	2	2	4	4	1	1	Full-size	Full-size	2	2P Phoenix power connector	Passive	0 ~ 60° C
PCM-9366N-S1A1E	Intel N3350	SODIMM	1	48-bit	Yes	2	Yes	2	2	2	4	1	1	Full-size	Full-size	2	2P Phoenix power connector	Passive	0 ~ 60° C

Note: Passive=fanless; Active=with fan

Packing List

Part No.	Description	Quantity
	PCM-9366 SBC	1
	Startup Manual	1
1701200220	RS-232 COM3/4 cable, F Cable 2*10P-2.0/D-SUB 9P(M)*2 22CM	1
1700018785	SATA 35cm power cable	1
1700019414	RS-232 COM2 Cable D-SUB 9P(M)/2*5P-2.0 30cm	1
1700018730	USB Cable 2*5P-2.0/USB-A(F)*2 25CM F/9	2
1700008941	M Cable SATA 7P/SATA 7P 32CM C=R 180/180D W/Lock	1
1700019584	Audio Cable 2*5P-2.0/JACK*3 20cm	1
9689000002	mini Jumper pack	1

Optional Accessories

Part No.	Description
TBD	

Embedded OS/API

Embedded OS/API	Part No.	Description
WIN10	TBD	
Linux		
VxWorks		
Android		
Software API		

Rear I/O View

