PCM-9588

Intel® Celeron® M Processor EBX SBC with DVI, TTL, VGA, LVDS, Ethernet, 6 COM, 2 SATA, 6 USB 2.0, PC/104-Plus

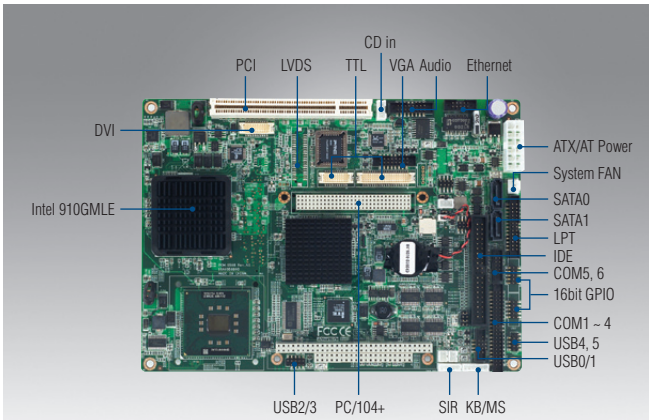

Features

- Intel® Celeron® M Processor ultra low power
- UL60601 Ethernet Port design (GbE is optional by request)
- Display combination: VGA + LVDS / DVI + LVDS/ DVI + VGA/ VGA + TTL
- 6 COM (Supports auto flow control), 2 SATA, 6 USB 2.0, 16-bit GPIO ports
- Supports LCD backlight turn-off, brightness control
- Supports embedded software APIs and Utilities

Software APIs: Watchdog, SMBus, H/W Monitor, GPIO, Backlight On/Off, Brightness, CPU Speed, System Throttling

Utilities: BIOS Flash, Monitoring

Specifications

Processor System	CPU	Intel Celeron M Processor 600 MHz	Intel Celeron M Processor 1 GHz
	Front Side Bus	400 MHz	400 MHz
	L2 Cache	512 KB	0 KB
	Chipset	Intel 910GMLE + ICH6M	Intel 910GMLE + ICH6M
	BIOS	Award 4-Mbit	Award 4-Mbit
Memory	Technology	DDR2 400 MHz	
	Max. Capacity	2 GB	
	Socket	1 x 200-pin SODIMM	
Display	Chipset	Intel 910GMLE	
	VRAM	DVMT 3.0 supports up to 128 MB	
	Graphics Engine	Mobile Intel GMA 900 3D/2D engine	
	LVDS	1 x LVDS, single channel 18/24-bit or dual channel 36/48-bit LVDS	
	VGA	up to QXGA (2048 x 1536)	
	TTL LCD	18/36-bit TTL (PCM-9588T version)	
	DVI	Yes (PCM-9588F version)	
	Dual Display	VGA+ LVDS / DVI+ LVDS/ DVI+ VGA/ VGA+ TTL	
Ethernet	Speed	10/100 Mbps on Ethernet (10/100/1000 Mbps is optional)	
	Controller	Realtek RTL8100CL-LF (Optional RTL8110SCL-LF for GbE)	
	Connector	Box header	
Audio	Chipset	ALC203 AC97, Line-in, Line-out, Mic-in, speaker out (R/L)	
	Amplifier	Max 2.2W/ch Stereo into a 3Ω Load	
WatchDog Timer	Output	System reset	
	Interval	Programmable 1 ~ 255 level	
Storage	CompactFlash	CompactFlash type I/II	
	SATA	2 SATA (Max. Data Transfer Rate 150 MB/s)	
	IDE	1 x EIDE (UDMA 33/66/100)	
	Floppy	1 x FDD (Optional)	
Internal I/O	Serial	4 x RS-232 (COM1~4) 2 x RS-422/485 (COM5/6, default RS-422/485, RS-232 with TX/RX only is optional by request) ESD protection for RS-232: Air gap ±15kV, Contact ±8kV	
	Ethernet	Ethernet x 1 (RJ-45 connector through the cable)	
	PS/2 KB/Mouse	1	
	VGA	1	
	USB	6 x USB 2.0	
	IDE	1 x EIDE (UDMA 33/66/100)	
	Parallel(LPT)	1	
	FDD	Share with LPT (Optional)	
	GPIO	16-bit general purpose input/output	
	IrDA	115 kbps (optional by request) shared from COM2	
Expansion	PC/104-Plus Slot	1	
	PCI Slot	1	
Power	Power Type	AT / ATX	
	Power Supply Voltage	ATX: 5 V STB, +5 V ± 5%, +12 V ± 10%, external 12 V option for LCD Inverter, PCI & PCI-104 Plus AT: 5 V only to boot up, external 12 V option for LCD Inverter, PCI & PC/104 Plus	
	Power Consumption (Typical)	PCM-9588F-S0A1E: 3.67 A @ 5 V (18.35 W)	
	Power Consumption (Max, test in HCT)	PCM-9588F-S0A1E: 3.76 A @ 5 V (18.8 W)	
	Power Management	APM, ACPI	
	Battery	Lithium 3 V / 196 mAh	
Environment	Operating	0 ~ 60° C (32 ~ 140° F) (Operating humidity: 40° C @ 95% RH non-condensing)	
	Non-Operating	-40° C ~ 85° C and 60° C @ 95% RH non-condensing	
Physical Characteristics	Dimensions (L x W)	203 x 146 mm (8" x 5.75") Top side: The highest is PCI slot (15.4 mm), Bottom side: The highest is CF socket (9.5 mm)	
	Weight	0.7 kg (1.54 lb) (with heatsink)	
	Total Height (with cooler + PCB + Bottom)	25.4mm 45.4mm (PCM-9588Z/Z2)	

All product specifications are subject to change without notice

Last updated : 11-Jun-2012

Block Diagram

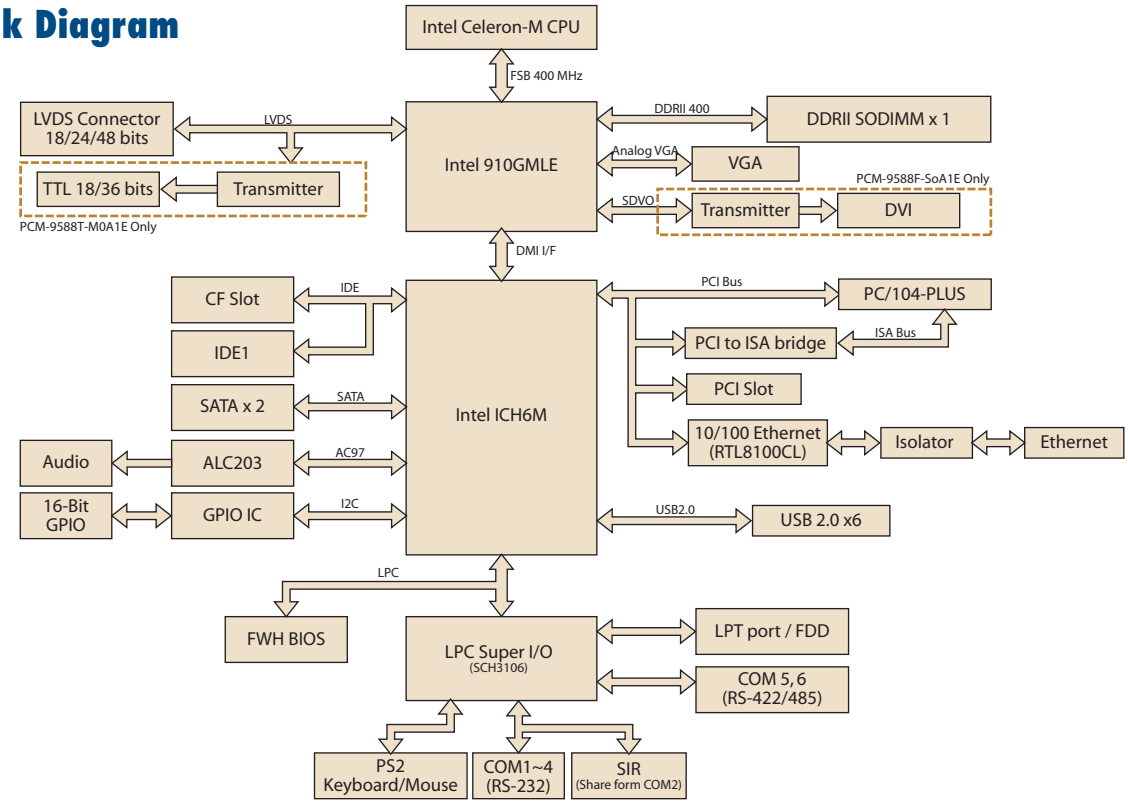

Ordering Information

Part No.	CPU	L2 Cache	Memory	LVDS	TTL	VGA	DVI	Ethernet UL60601	Audio	USB 2.0	SATA	RS-232	RS-232/ 422/485	GPIO	LPT	CF	PC/104+	Power	Thermal Solution	Operating Temp.
PCM-9588T-M0A1E	C-M 600 MHz	512 KB	SODIMM	-	36-bit	1	-	1	Yes	6	2	4	2	16	1	1	1	AT/ATX	Passive	0 ~ 60° C
PCM-9588F-S0A1E	C-M 1.0 GHz	0 KB	SODIMM	48-bit	-	1	1	1	Yes	6	2	4	2	16	1	1	1	AT/ATX	Passive	0 ~ 60° C
PCM-9588L-M0A1E	C-M 600 MHz	512 KB	SODIMM	48-bit	-	1	-	1	Yes	6	2	4	2	16	1	1	-	AT/ATX	Passive	0 ~ 60° C
PCM-9588Z-1GM0A1E	C-M 600 MHz	512 KB	Bundle 1 GB	-	36-bit	1	-	1	Yes	6	2	4	2	16	1	1	1	AT/ATX	Passive	-20 ~ 80° C
PCM-9588Z2-1GS0A1E	C-M 1GHz	0 KB	Bundle 1 GB	48-bit	-	1	1	1	Yes	6	2	4	2	16	1	1	1	AT/ATX	Passive	-40 ~ 85° C

Note: Passive = fanless; Active = with fan
*PCM-9588 has isolation feature in Ethernet for UL60601.

Packing List

Part No.	Description	Quantity
	PCM-9588 SBC	1
9689000002	Mini Jumper Pack	1
2006958800	Startup Manual	1
2066958811	Utility CD	1
1700001112	ATX Power Cable	1
1700006196	AT Power Cable	1
1960020569S000	Heatsink (50 x 50 x 10 mm)	1
1960002379	Heat sink 50 x 50 x 30 (PCM/9588Z/Z2)	1

Optional Accessories

Part No.	Description
PCM-10586-9588E	Wiring kit for PCM-9588
1703100260	USB cable (26 cm)
1703100121	USB cable (12 cm)
PCM-110-00A3E	1-slot PCI riser card for 5.25" biscuits
PCM-120-00A3E	2-slot PCI riser card for 5.25" biscuits
PCM-200-00A2E	PCI-104 to PCI bus module
1700001531	LPT to FDD cable

Embedded OS

Embedded OS	Part No.	Description
Win XPE	2070006672	Image XPE FP2007 PCM-9588 V3.01 ENG
	2070008830	XPE WES2009 for PCM-9588 (Multi) V4.0 ENG