RSB-4411

NXP ARM® Cortex®-A9 i.MX6 3.5" SBC

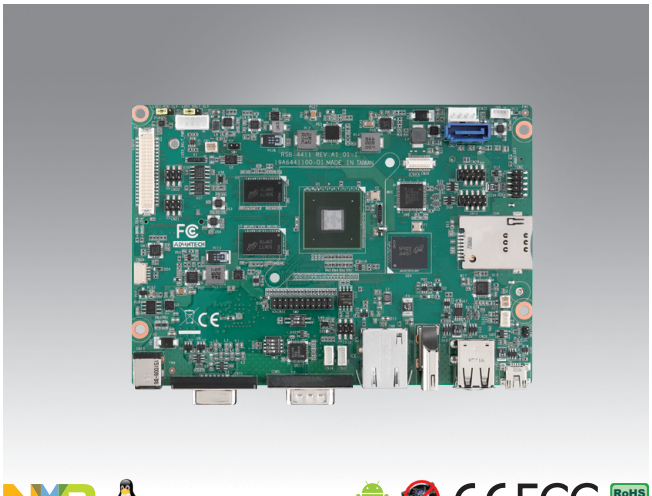

Features

- NXP ARM® Cortex®-A9 i.MX6 Dual/Quad up to 1 GHz
- Onboard 1GB DDR3 memory and 16GB eMMC
- HDMI and VGA 1920x1080 at 60Hz, Dual Channel 18/24 bit LVDS
- 3 UART, 1 GbE, 5 USB 2.0, 20 GPIO, 2 I2C, 1 SPI
- M.2 for WIFI/BT support , mini-PCIe for WIFI/3G support
- Low power consumption, fanless design
- Supports Linux and Android

Introduction

RSB-4411 is a RISC 3.5" single board computer (SBC) powered by a high-performance NXP ARM® Cortex®-A9 i.MX6 processor that supports full HD video encoding/decoding and Gigabit Ethernet networking. RSB-4411 also features mini PCIe, M.2, and SIM card slots for integrating Wi-Fi, Bluetooth, and 3G/4G/LTE modules. Equipped with complete Linux and Android BSPs, this system enables customers to easily develop unique application software for specific OS.

Specifications

Form Factor		3.5" SBC
Processor System	CPU	NXP ARM® Cortex®-A9 i.MX6 Dual/Quad-core up to 1.0 GHz processor
	Technology	DDR3 1066 MHz
	Capacity	1 GB of DDR3 onboard
	Flash	16 GB of eMMC NAND Flash for OS and 4 MB of SPI NOR Flash for Advantech's boot loader
Graphics	LVDS	1 x 18/24-bit LVDS with 1366 x 768 resolution for 1 channel; 1920 x 1080 resolution for 2 channels at 60Hz
	HDMI	1 HDMI, 1920 x 1080 at 60Hz
	VGA	1 VGA,1920 x 1080 at 60Hz
	Graphics Engine	3 IPUs. OpenGL ES 2.0 for 3D, BitBlt for 2D and OpenVG 1.1
	H/W Video Codec	Decoder: MPEG-4 ASP, H.264 HP, H.263, MPEG-2 MP, MJPEG BP Encoder: MPEG-4 SP, H.264 BP, H.263, MJPEG BP
Ethernet	Chipset	NXP i.MX6 integrated RGMII
	Speed	1 x 10/100/1000 Mbps
WatchDog Timer		1~6553s, power on/off 4s
I/O	SATA	1
	SATA Power	1
	USB	1 x USB OTG, 2 x USB Type A, and 3 x USB pin headers
	Audio	1 x line-out, 1 x mic-in via a pin header
	SPDIF	-
	SDIO	-
	Serial Port	2 x 2-wire RS-232 pin header 1 x 4-wire RSB-232/422/485, DB9
	SPI	1
	CAN	2
	GPIO	20-pin 3.3V TTL level GPIOs
	I²C	2
	System Bus	-
	Touch	-
	I/R	-
	Button	-
Expansion	Mini PCIe	1 x mini PCIe slot
	SD Socket	1 x SD slot
	SIM Slot	1 x SIM slot
	M.2 Socket	1 x M.2 slot
Power	Power Supply Voltage	12 V, 19 V, 24 V
	Power Type	DC-in
	Power Consumption	-
Environment	Operating Temperature	0 ~ 60 °C/-40 ~ 85 °C
	Operating Humidity	5 ~ 95% relative humidity, non-condensing
Mechanical	Dimensions (W x D)	146 x 102 x 20 mm
Operation System		Linux and Android
Certifications		CE/FCC Class B

All product specifications are subject to change without notice.

Last updated: 22-Sep-2022

Block Diagram

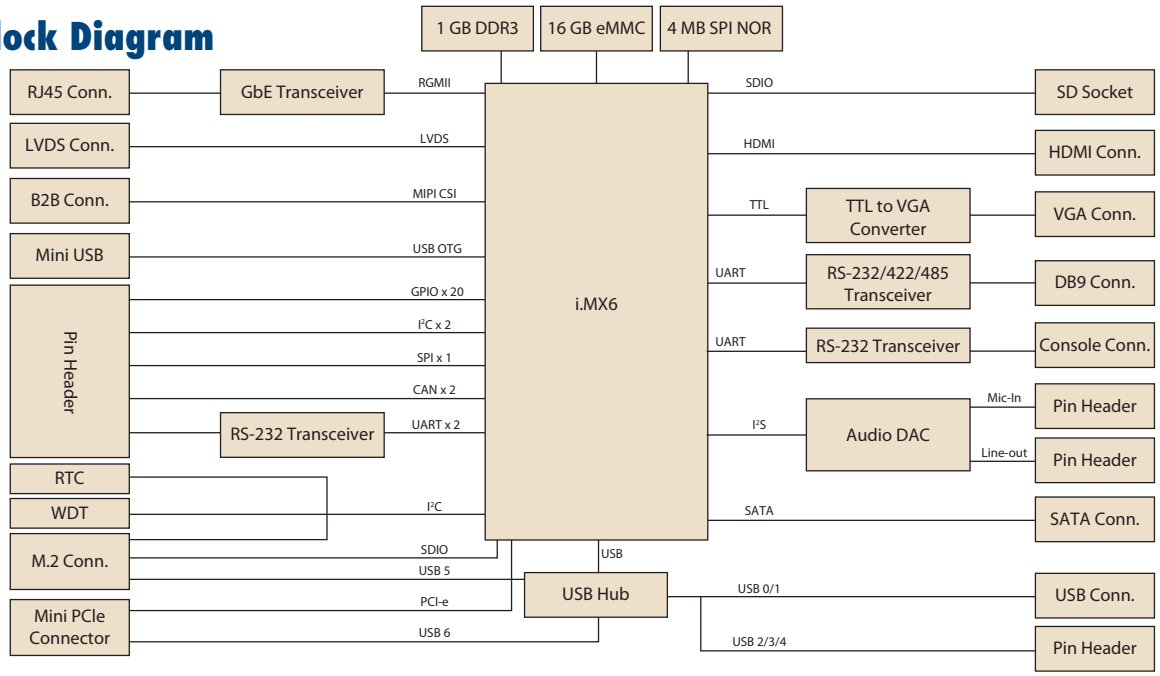

Ordering Information

Part Number	CPU	Memory	Flash	HDMI	VGA	LVDS	LAN	Serial Port	SATA	USB Host	System Bus	SD	CAN Bus	Operating Temperature
RSB-4411CD-PNA2E	NXP i.MX6 Dual-core, 1 GHz	1 GB	16 GB	1	1	1	1	1 x 4-wire RSB-232/422/485 2 x 2-wire RSB-232	1	5	_	1	2	0 ~ 60 °C
RSB-4411CQ-PNA2E	NXP i.MX6 Quad-core, 1 GHz	1 GB	16 GB	1	1	1	1	1 x 4-wire RSB-232/422/485 2 x 2-wire RSB-232	1	5	_	1	2	0 ~ 60 °C
RSB-4411WD-ONA2E	NXP i.MX6 Dual-core 800MHz	1 GB	16 GB	1	1	1	1	1 x 4-wire RSB-232/422/485 2 x 2-wire RSB-232	1	5	-	1	2	-40~85 °C
RSB-4411WQ-ONA2E	NXP i.MX6 Quad-core 800MHz	1 GB	16 GB	1	1	1	1	1 x 4-wire RSB-232/422/485 2 x 2-wire RSB-232	1	5	-	1	2	-40~85 °C

Packing List

Part Number	Description
RSB-4411	RSB-4411 3.5" SBC

Optional Accessories

Part Number	Description
96PSA-A36W12R1-3	Adapter 100-240 36W 12V 3A 9NA0362308
1700008921	Power Cord 3P PSE 183cm
1700019146	Power Cord CCC 3P 10A 250V 183cm
170203183C	Power cord 3P Europe (WS-010+WS-083) 183 cm
170203180A	Power cord 3P UK 2.5A/3A 250 V 1.83 M
1700001524	Power cord 3P UL 10A 125 V 180 cm
1700021565-01	Debug cable
1700018730	USB cable
1700026878-01	Mic-in cable
1700026879-01	Line-out cable
1700026880-01	CAN bus cable
1700026881-01	RS-232 cable
SQF-ISDM1-8G-21C	SQF SDHC C10 UHS-I MLC 8G, 1CH (-25~85°C)
EWM-W194M201E	IEEE 802.11ac/a/b/g/n, 2T2R, WiFI M.2 2230
AIW-344FQ-J01*	LTE 4G,3G WCDMA/DC-HSPA+, 2G module, MPCI-L280H
1750008717-01	Dipole Ant. D.B 2.4/5G WIFI 3dBi SMA/M-R BLK
1750008303-01	Antenna AN0727-64SP6BSM
1750007965-01	Antenna Cable R/P SMA (M) to MHF4, 300mm
1750006009	Antenna Cable SMA (F) to MHF 1.32 25cm

* Please contact us to get suitable cellular module for your region.

Dimensions

Unit: mm

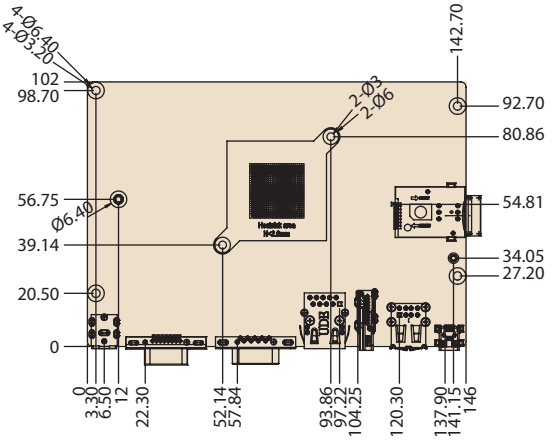

External I/O

