M.2 2280 PCIe SSD ER-1_DWPD 1.2 Datasheet

(SQF-C8Mxx-xxxGDG1x)

CONTENTS

Safety Instructions 4
Consignes de sécurité 4
1. Overview 5
2. Features 6
3. Specification Table 7
4. General Description 9
5. Pin Assignment and Description 12
6. SMART Atrributes 14
7. System Power Consumption 16
8. Physical Dimension 17
Appendix: Part Number Table 18

Revision History

Rev.	Date	History
0.1	2022/7/6	1. Preliminary release
0.2	2022/9/27	1. Update description

Advantech reserves the right to make changes without further notice to any products or data herein to improve reliability, function, or design. Information furnished by Advantech is believed to be accurate and reliable. However, Advantech does not assure any liability arising out of the application or use of this information, nor the application or use of any product or circuit described herein, neither does it convey any license under its patent rights nor the rights of others.
Copyright © 1983-2021 Advantech Co., Ltd. All rights reserved.

Safety Instructions

1. Read these safety instructions carefully.
2. Keep this User Manual for later reference.
3. Disconnect this equipment from any AC outlet before cleaning. Use a damp cloth. Do not use liquid or spray detergents for cleaning.
4. For plug-in equipment, the power outlet socket must be located near the equipment and must be easily accessible.
5. Keep this equipment away from humidity.
6. Put this equipment on a reliable surface during installation. Dropping it or letting it fall may cause damage.
7. The openings on the enclosure are for air convection. Protect the equipment from overheating. DO NOT COVER THE OPENINGS.
8. Make sure the voltage of the power source is correct before connecting the equipment to the power outlet.
9. Position the power cord so that people cannot step on it. Do not place anything over the power cord.
10. All cautions and warnings on the equipment should be noted.
11. If the equipment is not used for a long time, disconnect it from the power source to avoid damage by transient overvoltage.
12. Never pour any liquid into an opening. This may cause fire or electrical shock.
13. Never open the equipment. For safety reasons, the equipment should be opened only by qualified service personnel.
14. If one of the following situations arises, get the equipment checked by service personnel:
    - The power cord or plug is damaged.
    - Liquid has penetrated the equipment.
    - The equipment has been exposed to moisture.
    - The equipment does not work well, or you cannot get it to work according to the user's manual.
    - The equipment has been dropped and damaged.
    - The equipment has obvious signs of breakage.
15. DO NOT LEAVE THIS EQUIPMENT IN AN ENVIRONMENT WHERE THE STORAGE TEMPERATURE MAY GO BELOW -20° C (-4° F) OR ABOVE 60° C (140° F). THIS COULD DAMAGE THE EQUIPMENT. THE EQUIPMENT SHOULD BE IN A CONTROLLED ENVIRONMENT.
16. CAUTION: DANGER OF EXPLOSION IF BATTERY IS INCORRECTLY REPLACED. REPLACE ONLY WITH THE SAME OR EQUIVALENT TYPE RECOMMENDED BY THE MANUFACTURER, DISCARD USED BATTERIES ACCORDING TO THE MANUFACTURER'S INSTRUCTIONS.

Consignes de sécurité

1. Lisez attentivement ces instructions de sécurité.
2. Conservez ce manuel pour référence ultérieure.
3. Débranchez cet appareil de toute prise secteur avant le nettoyage. Utilisez un chiffon humide. Ne pas utiliser de détergents liquides ou en aérosol pour le nettoyage
4. Pour les équipements enfichables, la prise de courant doit être située près de l'équipement et doit être facilement accessible.
5. Gardez cet équipement à l'abri de l'humidité.
6. Placez cet équipement sur une surface fiable lors de l'installation. Le laisser tomber ou le laisser tomber peut causer des dommages.
7. Les ouvertures sur l'enceinte sont destinées à la convection de l'air. Protégez l'équipement de la surchauffe. NE COUVREZ PAS LES OUVERTURES.
8. Assurez-vous que la tension de la source d'alimentation est correcte avant de connecter l'équipement à la prise de courant.
9. Positionnez le cordon d'alimentation de sorte que personne ne puisse marcher dessus. Ne placez rien sur le cordon d'alimentation.
10. Toutes les mises en garde et avertissements sur l'équipement doivent être notés..
11. Si l'appareil n'est pas utilisé pendant une longue période, débranchez-le de la source d'alimentation pour éviter tout dommage dû à une surtension transitoire.
12. Ne jamais verser de liquide dans une ouverture. Cela pourrait provoquer un incendie ou un choc électrique.
13. N'ouvrez jamais l'équipement. Pour des raisons de sécurité, l'équipement ne doit être ouvert que par du personnel qualifié.
14. Si l'une des situations suivantes se produit, faites vérifier l'équipement par le personnel de service:l:
    - Le cordon d'alimentation ou la fiche est endommagé Liquid has penetrated the equipment.
    - L'équipement a été exposé à l'humidité.
    - L'équipement ne fonctionne pas bien ou vous ne pouvez pas le faire fonctionner conformément au manuel d'utilisation..
    - L'équipement est tombé et endommagé..
    - L'équipement présente des signes évidents de rupture.
15. NE PAS LAISSER CET APPAREIL DANS UN ENVIRONNEMENT O LA TEMPÉRATURE DE STOCKAGE PEUT ÊTRE INFÉRIEURE À -20 ° C (-4 ° F) OU SUPÉRIEURE À 60 ° C (140 ° F). CELA POURRAIT ENDOMMAGER L'ÉQUIPEMENT. L'ÉQUIPEMENT DOIT ÊTRE DANS UN ENVIRONNEMENT CONTRÔLÉ.
16. ATTENTION: DANGER D'EXPLOSION EN CAS DE REMPLACEMENT INCORRECT DE LA PILE. REMPLACEZ UNIQUEMENT AVEC LE MÊME TYPE OU LE TYPE ÉQUIVALENT RECOMMANDÉ PAR LE FABRICANT, DÉJETTEZ LES PILES UTILISÉES SELON LES INSTRUCTIONS DU FABRICANT.

1. Overview

Advantech SQFlash ER-1 series M.2 2280 PCIe SSD (Solid State Drive) is an NVM Express SSD designed as the standard M.2 form factor with PCIe interface and 3D TLC NAND Flash. SQFlash ER-1 supports PCIe Gen 4 x4, and it is compliant with NVMe 1.4 providing excellent performance. SQFlash ER-1 with heat-spreading design dissipate heat generating from IC making SSD perform more steady. SQFlash ER-1 have Die RAID protection to reduce bad blocks happening and optimize data integrity.

In addition, SQFlash ER-1 series adopt hybrid mode which enables SLC Cache followed by TLC direct write to strike balance between burst performance and steady overall stability. It provides ultra-speed and high IOPS and offers maximum capacity up to 4TB, making the SSD optimal for server and heavy data workload applications.

2. Features

- **PCIe Interface**
  - Compliant with NVMe1.4
  - PCIe Express Base Ver 4.0
  - PCIe Gen 4 x 4 lane & backward compatible to PCIe Gen3, Gen 2 and Gen 1
  - Support power management
- **Operating Voltage：3.3V**
- **Support fourth LDPC generation of ECC algorithm**
- **AES256、TCG-OPAL、TRIM supported**
- **Temperature Ranges[1]**
  - Commercial Temperature
    - 0℃ to 70℃ for operating
    - -40℃ to 85℃ for storage
  - Industrial Temperature
    - -40℃ to 85℃ for operating
    - -40℃ to 85℃ for storage

  *Note : 1. Based on SMART Attribute (Byte index [2 :1] of PCIe-SIG standard, which measured by thermal sensor
- **Mechanical Specification**
  - Shock：1,500G / 0.5ms
  - Vibration：20G / 7~2,000Hz
- **Humidty**
  - Humidity：up to 95% on 40℃
- **Acquired RoHS、WHQL、CE、FCC Certificate**
- **Acoustic：0 dB**
- **Dimension (w/ heatsink)：80.4 mm x 23.3 mm x 20.5 mm**

3. Specification Table

■ Performance

		Sequential (MB/sec)		Random (IOPS @4K)	
		Read	Write	Read	Write
3D TLC (BiCS5)	400 GB	5,500	2,200	449K	488K
	800 GB	7,100	3,700	779K	739K
	1600 GB	6,400	5,200	788K	777K
	3200 GB	6,500	5,000	779K	753K

Note. Performance results are based on CrystalDiskMark 7.0.0 with file size 1000MB of Queue Depth 32.

■ Sustain Performance

		Steady Sequential (MB/sec)	
		Read	Write
3D TLC (BiCS5)	400 GB	2,900	404
	800 GB	4,500	736
	1600 GB	4,200	1,200
	3200 GB	3,600	1,000

Note. Sustain Performance based on Linux FIO Test Result.

■ Latency (QD1)

		Sequential (us)		Random (us)	
		Read	Write	Read	Write
3D TLC (BiCS5)	400 GB	10	9	10	70
	800 GB	10	9	10	70
	1600 GB	10	9	10	71
	3200 GB	10	9	10	89

Note. Latency measured using 4KB(4,096 Bytes) transfer size with Queue Depth equal to 1 on a sequential and random workload

■ Quality of Service (QoS)

		Quality of Service[1,2] (99.9%) (ms)	
		Read Queue Depth 1	Write Queue Depth 1
3D TLC (BiCS5)	400 GB	0.02	0.08
	800 GB	0.02	0.08
	1600 GB	0.02	0.08
	3200 GB	0.02	0.1

Note.

1. Quality of Service measured using 4KB (4,096 bytes) transfer size on a random workload on a full Logical Block Address (LBA) span of the drive once the workload has reached steady state but including all background activities required for normal operation and data reliability.

2. Based on Random 4KB QD=1 workloads, measured as the time taken for 99.9 percentile of commands to finish the round-trip from host to drive and back to host.

Endurance

JEDEC defined an endurance rating TBW (TeraByte Written), following by the equation below, for indicating the number of terabytes a SSD can be written which is a measurement of SSDs' expected lifespan, represents the amount of data written to the device.

TBW = [(NAND Endurance) x (SSD Capacity)] / WAF

- **NAND Endurance**: Program / Erase cycle of a NAND flash.
  - 3D TLC (BiCS3/ BiCS4/ BiCS5): 3,000 cycles
- **SSD Capacity**: SSD physical capacity in total of a SSD.
- **WAF**: Write Amplification Factor (WAF), as the equation shown below, is a numerical value representing the ratio between the amount of data that a SSD controller needs to write and the amount of data that the host's flash controller writes. A better WAF, which is near to 1, guarantees better endurance and lower frequency of data written to flash memory.

WAF = (Lifetime write to flash) / (Lifetime write to host)

- **Endurance measurement is based on JESD218 Test method and JESD219A Workload, tested by ULINK**

3D TLC (BiCS5)	Client workload	Enterprise workload
400 GB	646	876
800 GB	1,592	1,752
1600 GB	3,505	3,504
3200 GB	6,000	7,008

Note.

1. Sequential: Mainly sequential write are estimated by PassMark Burnin Test v8.1 pro.

2. Client: Follow JESD218 Test method and JESD219A Workload, tested by ULINK. (The capacity lower than 64GB client workload is not specified in JEDEC219A, the values are estimated.)

3. Based on out-of-box performance.

4. Current TBW Values are for reference only. Actual figures will be released after MP.

4. General Description

Error Correction Code (ECC)

Flash memory cells will deteriorate with use, which might generate random bit errors in the stored data. Thus, SQFlash ER-1 series PCIe SSD applies the forth generation LDPC of ECC algorithm, which can detect and correct errors occur during read process, ensure data been read correctly, as well as protect data from corruption.

Wear Leveling

NAND flash devices can only undergo a limited number of program/erase cycles, and in most cases, the flash media are not used evenly. If some areas get updated more frequently than others, the lifetime of the device would be reduced significantly. Thus, Wear Leveling is applied to extend the lifespan of NAND Flash by evenly distributing write and erase cycles across the media.

SQFlash provides advanced Wear Leveling algorithm, which can efficiently spread out the flash usage through the whole flash media area. Moreover, by implementing both dynamic and static Wear Leveling algorithms, the life expectancy of the NAND flash is greatly improved.

Bad Block Management

Bad blocks are blocks that include one or more invalid bits, and their reliability is not guaranteed. Blocks that are identified and marked as bad by the manufacturer are referred to as “Initial Bad Blocks”. Bad blocks that are developed during the lifespan of the flash are named “Later Bad Blocks”. SQFlash implements an efficient bad block management algorithm to detect the factory-produced bad blocks and manages any bad blocks that appear with use. This practice further prevents data being stored into bad blocks and improves the data reliability.

Garbage Collection / TRIM

Garbage collection and TRIM technology is used to maintain data consistency and perform continual data cleansing on SSDs. It runs as a background process, freeing up valuable controller resources while sorting good data into available blocks, and deleting bad blocks. It also significantly reduces write operations to the drive, thereby increasing the SSD’s speed and lifespan.

SMART

SMART, an acronym for Self-Monitoring, Analysis and Reporting Technology, is an open standard that allows a hard disk drive to automatically detect its health and report potential failures. When a failure is recorded by SMART, users can choose to replace the drive to prevent unexpected outage or data loss. Moreover, SMART can inform users of impending failures while there is still time to perform proactive actions, such as copy data to another device.

Over-Provision

Over Provisioning refers to the inclusion of extra NAND capacity in a SSD, which is not visible and cannot be used by users. With Over Provisioning, the performance and IOPS (Input/Output Operations per Second) are improved by providing the controller additional space to manage P/E cycles, which enhances the reliability and endurance as well. Moreover, the write amplification of the SSD becomes lower when the controller writes data to the flash.

Thermal Throttling

Thermal Throttling function is for protecting the drive and reducing the possibility of read / write error due to overheat. The temperature is monitored by the thermal sensor. As the operating temperature continues to increase to threshold temperature, the Thermal Throttling mechanism is activated. At this time, the performance of the drive will be significantly decreased to avoid continuous heating. When the operating temperature falls below threshold temperature, the drive can resume to normal operation.

SLC Cache

SQFlash ER-1 series adopt hybrid mode which enables SLC Cache up to 3% of total user capacity followed by TLC direct write to strike balance between burst performance and steady overall stability. The SLC Cache buffer size are defined as table below.

3D TLC (BiCS5)	SLC cache (GB)	SLC cache (%)
400 GB	12	3
800 GB	24	3
1600 GB	48	3
3200 GB	96	3

Block Diagram

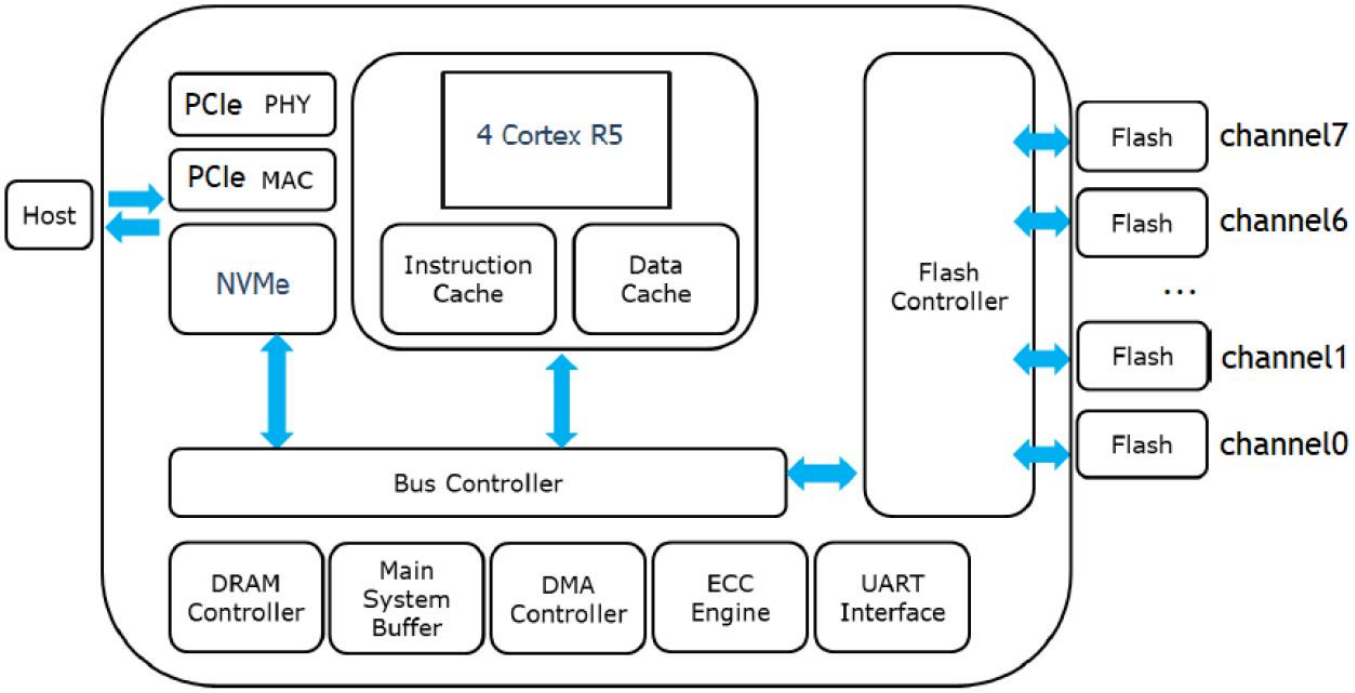

LBA value

Density (GB)	LBA
400	781,422,768
800	1,562,824,368
1600	3,125,627,568
3200	6,251,233,968

5. Pin Assignment and Description

Pin No.	PCIe Pin	Description
1	GND	Ground
2	3.3V	3.3V source
3	GND	Ground
4	3.3V	3.3V source
5	PETn3	PCIe TX Differential signal defined by the PCI Express M.2 spec
6	N/C	No connect
7	PETp3	PCIe TX Differential signal defined by the PCI Express M.2 spec
8	N/C	No connect
9	GND	Ground
10	N/C	No connect
11	PERn3	PCIe RX Differential signal defined by the PCI Express M.2 spec
12	3.3V	3.3V source
13	PERp3	PCIe RX Differential signal defined by the PCI Express M.2 spec
14	3.3V	3.3V source
15	GND	Ground
16	3.3V	3.3V source
17	PETn2	PCIe TX Differential signal defined by the PCI Express M.2 spec
18	3.3V	3.3V source
19	PETp2	PCIe TX Differential signal defined by the PCI Express M.2 spec
20	N/C	No connect
21	GND	Ground
22	N/C	No connect
23	PERn2	PCIe RX Differential signal defined by the PCI Express M.2 spec
24	N/C	No connect
25	PERp2	PCIe RX Differential signal defined by the PCI Express M.2 spec
26	N/C	No connect
27	GND	Ground
28	N/C	No connect
29	PETn1	PCIe TX Differential signal defined by the PCI Express M.2 spec
30	N/C	No connect
31	PETp1	PCIe TX Differential signal defined by the PCI Express M.2 spec
32	N/C	No connect
33	GND	Ground
34	N/C	No connect
35	PERn1	PCIe RX Differential signal defined by the PCI Express M.2 spec
36	N/C	No connect
37	PERp1	PCIe RX Differential signal defined by the PCI Express M.2 spec
38	N/C	No connect
39	GND	Ground
40	N/C (reserved for SMB_CKL)	No connect, reserved for SMB_CKL
41	PETn0	PCIe TX Differential signal defined by the PCI Express M.2 spec
42	N/C (reserved for SMB_DATA)(I/O)(O/1.8V)	No connect, reserved for SMB_DATA)(I/O)(O/1.8V)
43	PETp0	PCIe TX Differential signal defined by the PCI Express M.2 spec
44	ALERT#(O) (0/1.8V)	Alert notification to master; Open Drain with pull-up on platform; Active low.
45	GND	Ground
46	N/C	No connect
47	PERn0	PCIe RX Differential signal defined by the PCI Express M.2 spec
48	N/C	No connect
49	PERp0	PCIe RX Differential signal defined by the PCI Express M.2 spec

50	PERST#(I)(0/3.3V)	PE-Reset is a functional reset to the card as defined by the PCIe Mini CEM specification.
51	GND	Ground
52	CLKREQ#(I/O)(0/3.3V)	Clock Request is a reference clock request signal as defined by the PCIe Mini CEM specification; Also used by L1 PM Sub-states.
53	REFCLKn	PCIe Reference Clock signals (100 MHz) defined by the PCI Express M.2 spec.
54	N/C	No connect
55	REFCLKp	PCIe Reference Clock signals (100 MHz) defined by the PCI Express M.2 spec.
56	N/C	No connect
57	GND	Ground
58	N/C	No connect
59	Module Key M	Module Key
60	Module Key M	
61	Module Key M	
62	Module Key M	
63	Module Key M	
64	Module Key M	
65	Module Key M	
66	Module Key M	
67	N/C	No connect
68	N/C	No connect
69	N/C	No connect
70	3.3V	3.3V source
71	GND	Ground
72	3.3V	3.3V source
73	GND	Ground
74	3.3V	3.3V source
75	GND	Ground

6. SMART Atrributes

ID	ATTRIBUTE_NAME	Log Identifier	# of Bytes	Byte index	Unit
01h	Critical Warning	02h	1	[0]	-
02h	Composite Temperature	02h	2	[2:1]	°K
03h	Available Spare	02h	1	[3]	%
04h	Available Spare Threshold	02h	1	[4]	%
05h	Percentage Used	02h	1	[5]	%
06h-10h	Reserved	02h		[31:6]	
11h	Data Units Read	02h	16	[47:32]	1000 Sectors
12h	Data Units Written (Host Write)	02h	16	[63:48]	1000 Sectors
13h	Host Read Commands	02h	16	[79:64]	count
14h	Host Write Commands	02h	16	[95:80]	count
15h	Controller Busy Time	02h	16	[111:96]	mins
16h	Power Cycles	02h	16	[127:112]	count
17h	Power on Hours	02h	16	[143:128]	hours
18h	Unsafe Shutdowns	02h	16	[159:144]	count
19h	Media and Data Integrity Errors	02h	16	[175:160]	times
1Ah	Number of Error Information Log Entries	02h	16	[191:176]	count
1Bh	Warning Composite Temperature Time	02h	4	[195:192]	mins
1Ch	Critical Composite Temperature Time	02h	4	[199:196]	mins
1Dh	Temperature Sensor 1	02h	2	[201:200]	°K
1Eh	Temperature Sensor 2	02h	2	[203:202]	°K
1Fh	Temperature Sensor 3	02h	2	[205:204]	°K
20h	Temperature Sensor 4	02h	2	[207:206]	°K
21h	Temperature Sensor 5	02h	2	[209:208]	°K
22h	Temperature Sensor 6	02h	2	[211:210]	°K
23h	Temperature Sensor 7	02h	2	[213:212]	°K
24h	Temperature Sensor 8	02h	2	[215:214]	°K
25h	Thermal Management Temperature 1 Transition Count	02h	4	[219:216]	count
26h	Thermal Management Temperature 2 Transition Count	02h	4	[223:220]	count
27h	Total Time for Thermal Management Temperature 1:	02h	4	[227:224]	Second
28h	Total Time for Thermal Management Temperature 2:	02h	4	[231:228]	Second
29h-4Fh	Reserved	02h		[511:232]	
50h	Flash Read Sector	C0h	8	[7:0]	sector
51h	Flash Write Sector	C0h	8	[15:8]	sector
52h	UNC Error	C0h	8	[23:16]	count
53h	PHY Error	C0h	4	[27:24]	count
54h	Early Bad Block	C0h	4	[31:28]	count
55h	Later Bad Block	C0h	4	[35:32]	count

56h	Max Erase Count	C0h	4	[39:36]	count
57h	Average Erase Count	C0h	4	[43:40]	count
58h	Current Percent Spares	C0h	8	[51:44]	%
59h	Current Temperature	C0h	2	[53:52]	°K
5Ah	Lowest Temperature	C0h	2	[55:54]	°K
5Bh	Highest Temperature	C0h	2	[57:56]	°K
5Ch	Current Controller Temperature	C0h	2	[61:60]	°K
5Dh	Spare Blocks	C0h	2	[63:62]	count

7. System Power Consumption

■ Supply Voltage

Parameter	Rating
Operating Voltage	3.3V ± 5%

■ Power Consumption

(Unit: W)		Read	Write	Idle
3D TLC (BiCS5)	400 GB	5.23	3.04	1.93
	800 GB	7.14	4.06	1.91
	1600 GB	7.22	6.06	1.94
	3200 GB	7.18	5.82	1.95

8. Physical Dimension

M.2 2280 PCIe SSD (w/ Heatsink) (Unit: mm)

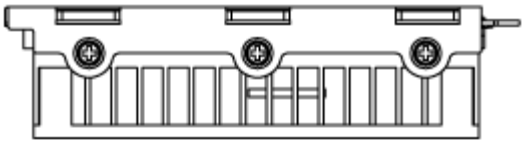

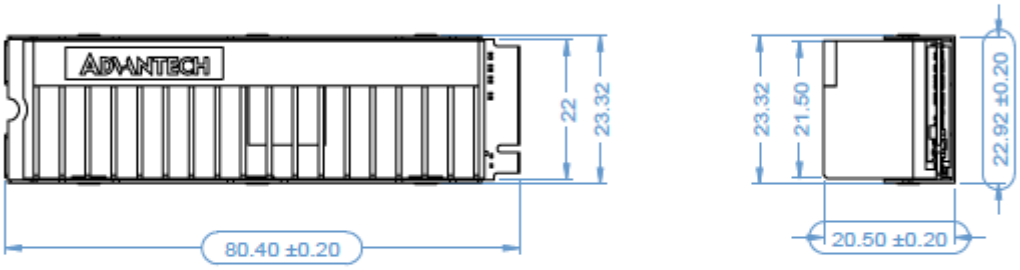

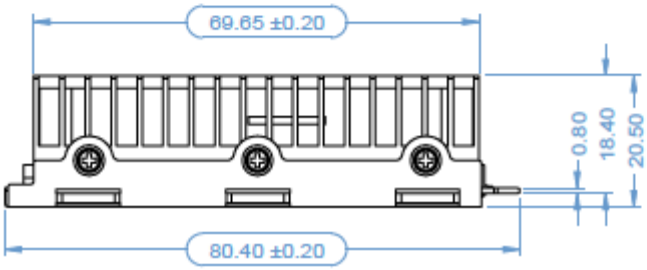

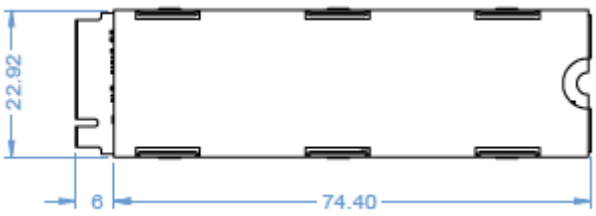

Appendix: Part Number Table

Product	Advantech PN
SQF ER-1 NVMe M.2 2280 SSD (OPAL) DWPD 1.2, 400G 3D TLC (BiCS5) (0~70°C)	SQF-C8MV4-400GDG1C
SQF ER-1 NVMe M.2 2280 SSD (OPAL) DWPD 1.2, 800G 3D TLC (BiCS5) (0~70°C)	SQF-C8MV4-800GDG1C
SQF ER-1 NVMe M.2 2280 SSD (OPAL) DWPD 1.2, 1600G 3D TLC (BiCS5) (0~70°C)	SQF-C8MV4-1K6GDG1C
SQF ER-1 NVMe M.2 2280 SSD (OPAL) DWPD 1.2, 3200G 3D TLC (BiCS5) (0~70°C)	SQF-C8MV4-3K2GDG1C
SQF ER-1 NVMe M.2 2280 SSD (OPAL) DWPD 1.2, 400G 3D TLC (BiCS5) (-40~85°C)	SQF-C8MV4-400GDG1E
SQF ER-1 NVMe M.2 2280 SSD (OPAL) DWPD 1.2, 800G 3D TLC (BiCS5) (-40~85°C)	SQF-C8MV4-800GDG1E
SQF ER-1 NVMe M.2 2280 SSD (OPAL) DWPD 1.2, 1600G 3D TLC (BiCS5) (-40~85°C)	SQF-C8MV4-1K6GDG1E
SQF ER-1 NVMe M.2 2280 SSD (OPAL) DWPD 1.2, 3200G 3D TLC (BiCS5) (-40~85°C)	SQF-C8MV4-3K2GDG1E