M.2 2280 PCIe SSD 920-D Datasheet

(SQF-CM8xx-xxxGDECx)

CONTENTS

Safety Instructions 4
Consignes de sécurité 4
1. Overview 5
2. Features 6
3. Specification Table 7
4. General Description 9
5. Pin Assignment and Description 12
6. NVMe Command List 14
7. Identify Device Data 15
8. SMART Atrributes 17
9. System Power Consumption 18
10. Physical Dimension 19
Appendix: Part Number Table 20

Revision History

Rev.	Date	History
0.1	2021/11/5	1. Preliminary release
0.2	2021/11/15	1. Add performance and consumption
0.3	2021/12/21	1. Add performance, consumption and TBW

Advantech reserves the right to make changes without further notice to any products or data herein to improve reliability, function, or design. Information furnished by Advantech is believed to be accurate and reliable. However, Advantech does not assure any liability arising out of the application or use of this information, nor the application or use of any product or circuit described herein, neither does it convey any license under its patent rights nor the rights of others.
Copyright © 1983-2021 Advantech Co., Ltd. All rights reserved.

Safety Instructions

1. Read these safety instructions carefully.
2. Keep this User Manual for later reference.
3. Disconnect this equipment from any AC outlet before cleaning. Use a damp cloth. Do not use liquid or spray detergents for cleaning.
4. For plug-in equipment, the power outlet socket must be located near the equipment and must be easily accessible.
5. Keep this equipment away from humidity.
6. Put this equipment on a reliable surface during installation. Dropping it or letting it fall may cause damage.
7. The openings on the enclosure are for air convection. Protect the equipment from overheating. DO NOT COVER THE OPENINGS.
8. Make sure the voltage of the power source is correct before connecting the equipment to the power outlet.
9. Position the power cord so that people cannot step on it. Do not place anything over the power cord.
10. All cautions and warnings on the equipment should be noted.
11. If the equipment is not used for a long time, disconnect it from the power source to avoid damage by transient overvoltage.
12. Never pour any liquid into an opening. This may cause fire or electrical shock.
13. Never open the equipment. For safety reasons, the equipment should be opened only by qualified service personnel.
14. If one of the following situations arises, get the equipment checked by service personnel:
    - The power cord or plug is damaged.
    - Liquid has penetrated the equipment.
    - The equipment has been exposed to moisture.
    - The equipment does not work well, or you cannot get it to work according to the user's manual.
    - The equipment has been dropped and damaged.
    - The equipment has obvious signs of breakage.
15. DO NOT LEAVE THIS EQUIPMENT IN AN ENVIRONMENT WHERE THE STORAGE TEMPERATURE MAY GO BELOW -20° C (-4° F) OR ABOVE 60° C (140° F). THIS COULD DAMAGE THE EQUIPMENT. THE EQUIPMENT SHOULD BE IN A CONTROLLED ENVIRONMENT.
16. CAUTION: DANGER OF EXPLOSION IF BATTERY IS INCORRECTLY REPLACED. REPLACE ONLY WITH THE SAME OR EQUIVALENT TYPE RECOMMENDED BY THE MANUFACTURER, DISCARD USED BATTERIES ACCORDING TO THE MANUFACTURER'S INSTRUCTIONS.

Consignes de sécurité

1. Lisez attentivement ces instructions de sécurité.
2. Conservez ce manuel pour référence ultérieure.
3. Débranchez cet appareil de toute prise secteur avant le nettoyage. Utilisez un chiffon humide. Ne pas utiliser de détergents liquides ou en aérosol pour le nettoyage
4. Pour les équipements enfichables, la prise de courant doit être située près de l'équipement et doit être facilement accessible.
5. Gardez cet équipement à l'abri de l'humidité.
6. Placez cet équipement sur une surface fiable lors de l'installation. Le laisser tomber ou le laisser tomber peut causer des dommages.
7. Les ouvertures sur l'enceinte sont destinées à la convection de l'air. Protégez l'équipement de la surchauffe. NE COUVREZ PAS LES OUVERTURES.
8. Assurez-vous que la tension de la source d'alimentation est correcte avant de connecter l'équipement à la prise de courant.
9. Positionnez le cordon d'alimentation de sorte que personne ne puisse marcher dessus. Ne placez rien sur le cordon d'alimentation.
10. Toutes les mises en garde et avertissements sur l'équipement doivent être notés..
11. Si l'appareil n'est pas utilisé pendant une longue période, débranchez-le de la source d'alimentation pour éviter tout dommage dû à une surtension transitoire.
12. Ne jamais verser de liquide dans une ouverture. Cela pourrait provoquer un incendie ou un choc électrique.
13. N'ouvrez jamais l'équipement. Pour des raisons de sécurité, l'équipement ne doit être ouvert que par du personnel qualifié.
14. Si l'une des situations suivantes se produit, faites vérifier l'équipement par le personnel de service:l:
    - Le cordon d'alimentation ou la fiche est endommagé Liquid has penetrated the equipment.
    - L'équipement a été exposé à l'humidité.
    - L'équipement ne fonctionne pas bien ou vous ne pouvez pas le faire fonctionner conformément au manuel d'utilisation..
    - L'équipement est tombé et endommagé..
    - L'équipement présente des signes évidents de rupture.
15. NE PAS LAISSER CET APPAREIL DANS UN ENVIRONNEMENT O LA TEMPÉRATURE DE STOCKAGE PEUT ÊTRE INFÉRIEURE À -20 ° C (-4 ° F) OU SUPÉRIEURE À 60 ° C (140 ° F). CELA POURRAIT ENDOMMAGER L'ÉQUIPEMENT. L'ÉQUIPEMENT DOIT ÊTRE DANS UN ENVIRONNEMENT CONTRÔLÉ.
16. ATTENTION: DANGER D'EXPLOSION EN CAS DE REMPLACEMENT INCORRECT DE LA PILE. REMPLACEZ UNIQUEMENT AVEC LE MÊME TYPE OU LE TYPE ÉQUIVALENT RECOMMANDÉ PAR LE FABRICANT, DÉJETTEZ LES PILES UTILISÉES SELON LES INSTRUCTIONS DU FABRICANT.

1. Overview

Advantech SQFlash 920-D series M.2 2280 PCIe SSD (Solid State Drive) delivers all the advantages of flash disk technology with PCIe Gen3 x4 interface, including being compliant with standard M.2 2280 (M Key) form factor. The device is designed to operate at a maximum operating frequency of 200MHz with 25MHz external crystal. Its capacity could provide a wide range up to 1.9TB. Moreover, it can reach up to 3,400MB/s read as well as 2,700MB/s write high performance based on Kioxia 112-layer 3D TLC Flash.

2. Features

- **PCIe Interface**
  - Compliant with NVMe1.3
  - Compatible with PCIe I/II/III x4 interface
  - Support up to queue depth 64K
  - Support power management
- **Operating Voltage：3.3V**
- **Support LDPC with RAID ECC**
- **AES256、TCG-OPAL、TRIM、AHCI supported**
- **Hardware Quick Erase supported (optional)**
- **Temperature Ranges[1]**
  - Commercial Temperature
    - 0℃ to 70℃ for operating
    - -40℃ to 85℃ for storage
  - Industrial Temperature
    - -40℃ to 85℃ for operating
    - -40℃ to 85℃ for storage

  *Note : 1. Based on SMART Attribute (Byte index [2 :1] of PCIe-SIG standard, which measured by thermal sensor
- **Mechanical Specification**
  - Shock：1,500G / 0.5ms
  - Vibration：20G / 80~2,000Hz
- **Humidty**
  - Humidity：up to 95% under 40℃
- **Acquired RoHS、WHQL、CE、FCC Certificate**
- **Acoustic：0 dB**
- **Dimension：80.0 mm x 22.0 mm x 7.3 mm**

3. Specification Table

■ Performance

		Sequential (MB/sec)		Random (IOPS @4K)	
		Read	**Write**	**Read**	**Write**
3D TLC (BiCS5)	480 GB	3,300	2,400	200K	500K
	960 GB	3,300	3,000	400K	640K
	1920 GB	3,300	3,000	650K	650K
	3840 GB	TBD	TBD	TBD	TBD

* Performance measured by CrystalDiskMark 6.0, QD32T1, 1GB range.

* Performance specification is under Thermal Throttling inactivated.

* Operating System : Windows 10 Professional (x64)

* Intel Core i7-8700K CPU @ 3.7GHz

* Burst off by default for enterprise application, adjustable depends on different application requirement

■ Endurance

JEDEC defined an endurance rating TBW (TeraByte Written), following by the equation below, for indicating the number of terabytes a SSD can be written which is a measurement of SSDs' expected lifespan, represents the amount of data written to the device.

TBW = [(NAND Endurance) x (SSD Capacity)] / WAF

- **NAND Endurance**: Program / Erase cycle of a NAND flash.
  - SLC: 100,000 cycles
  - Ultra MLC: 30,000 cycles
  - MLC: 3,000 cycles
  - 3D TLC (BiCS3/ BiCS4/ BiCS5): 3,000 cycles
- **SSD Capacity**: SSD physical capacity in total of a SSD.
- **WAF**: Write Amplification Factor (WAF), as the equation shown below, is a numerical value representing the ratio between the amount of data that a SSD controller needs to write and the amount of data that the host's flash controller writes. A better WAF, which is near to 1, guarantees better endurance and lower frequency of data written to flash memory.

WAF = (Lifetime write to flash) / (Lifetime write to host)

- **Endurance measurement is based on New JEDEC 219 Client Workload and verified with following workload conditions,**
  - PreCond%full = 100%
  - Trim commands enabled
  - Random data pattern.

3D TLC (BiCS5)	WAF	TBW	DWPD*
480 GB	2.2	635	1.20
960 GB	2	1400	1.33
1920 GB	2	2800	1.33
3840 GB	TBD	TBD	TBD

* Endurance of 1 drive writes per day (DWPD) for 3 years

4. General Description

■ Error Correction Code (ECC)

Flash memory cells will deteriorate with use, which might generate random bit errors in the stored data. Thus, SQFlash 920-D series PCIe SSD applies the LDPC with RAID ECC algorithm, which can detect and correct errors occur during read process, ensure data been read correctly, as well as protect data from corruption.

■ Wear Leveling

NAND flash devices can only undergo a limited number of program/erase cycles, and in most cases, the flash media are not used evenly. If some areas get updated more frequently than others, the lifetime of the device would be reduced significantly. Thus, Wear Leveling is applied to extend the lifespan of NAND Flash by evenly distributing write and erase cycles across the media.

SQFlash provides advanced Wear Leveling algorithm, which can efficiently spread out the flash usage through the whole flash media area. Moreover, by implementing both dynamic and static Wear Leveling algorithms, the life expectancy of the NAND flash is greatly improved.

■ Bad Block Management

Bad blocks are blocks that include one or more invalid bits, and their reliability is not guaranteed. Blocks that are identified and marked as bad by the manufacturer are referred to as “Initial Bad Blocks”. Bad blocks that are developed during the lifespan of the flash are named “Later Bad Blocks”. SQFlash implements an efficient bad block management algorithm to detect the factory-produced bad blocks and manages any bad blocks that appear with use. This practice further prevents data being stored into bad blocks and improves the data reliability.

■ Power Loss Protection

– Flush Manager

Power Loss Protection is a mechanism to prevent data loss during unexpected power failure. DRAM is a volatile memory and frequently used as temporary cache or buffer between the controller and the NAND flash to improve the SSD performance. However, one major concern of the DRAM is that it is not able to keep data during power failure. Accordingly, SQFlash SSD applies the Flush Manager technology, only when the data is fully committed to the NAND flash will the controller send acknowledgement (ACK) to the host. Such implementation can prevent false-positive performance and the risk of power cycling issues.

In addition, it is critical for a controller to shorten the time the in-flight data stays in the controller internal cache. Thus, SQFlash applies an algorithm to reduce the amount of data resides in the cache to provide a better performance. With Flush Manager, incoming data would only have a “pit stop” in the cache and then move to NAND flash directly. Also, the onboard DDR will be treated as an “organizer” to consolidate incoming data into groups before written into the flash to improve write amplification.

– Voltage Stabilizer

While the built-in voltage detector detects an unstable power input (< 3.135 V or > 3.465 V), the controller will issue a power failure interrupt and force a Flush CMD first. At the same time, the whole internal power supply will be switched to Voltage Stabilizer immediately to ensure stable power is supplied throughout the whole drive. This ensures the Flash IC and DDR IC will not operate with unstable power which could lead to data errors or bad data integrity.

■ TRIM

TRIM is a feature which helps improve the read/write performance and speed of solid-state drives (SSD). Unlike hard disk drives (HDD), SSDs are not able to overwrite existing data, so the available space gradually becomes smaller with each use. With the TRIM command, the operating system can inform the SSD which blocks of data are no longer in use and can be removed permanently. Thus, the SSD will perform the erase action, which prevents unused data from occupying blocks all the time.

SMART

SMART, an acronym for Self-Monitoring, Analysis and Reporting Technology, is an open standard that allows a hard disk drive to automatically detect its health and report potential failures. When a failure is recorded by SMART, users can choose to replace the drive to prevent unexpected outage or data loss. Moreover, SMART can inform users of impending failures while there is still time to perform proactive actions, such as copy data to another device.

Over-Provision

Over Provisioning refers to the inclusion of extra NAND capacity in a SSD, which is not visible and cannot be used by users. With Over Provisioning, the performance and IOPS (Input/Output Operations per Second) are improved by providing the controller additional space to manage P/E cycles, which enhances the reliability and endurance as well. Moreover, the write amplification of the SSD becomes lower when the controller writes data to the flash.

Thermal Throttling

Thermal Throttling function is for protecting the drive and reducing the possibility of read / write error due to overheat. The temperature is monitored by the thermal sensor. As the operating temperature continues to increase to threshold temperature, the Thermal Throttling mechanism is activated. At this time, the performance of the drive will be significantly decreased to avoid continuous heating. When the operating temperature falls below threshold temperature, the drive can resume to normal operation.

Advanced Device Security Features

- **Advanced Encryption Standard (AES)**

  An AES 256-bit encryption key is generated in the drive's security controller before the data gets stored on the NAND flash. When the controller or firmware fails, the data that is securely stored in the encryption key becomes inaccessible through the NAND flash.

- **OPAL 2.0 support**

  SQFlash 920-D series supports standard OPAL 2.0 function for advance Self-Encryption Drive (SED) feature sets. Advantech provides also user friendly interface for setting disk / system bonding to prevent SSD be used in non-authorized platforms, which is called Flash Lock function.

- **Secure Erase Function**

  SQFlash 920-D series supports standard NVMe command for secure erase function; when the SSD controller receive the secure erase command, the erase process will reset all blocks and erase all of the user data in the SSD.

- **Sanitize Fucntion**

  SQFlash 920-D series default implement NVMe Sanitize Device Feature set, which supports the command set of Block Erase, Overwritten and Crypto Scramble. With the internal AES encryption support, the Crypto Scrambel process will start with resetting AES key. By doing so, existing data will be scrambled within 10ms and cannot be recovered anymore. Moreover, erase flag is set when erase function is triggered, which will ensure the whole erase process can be 100% completed. Even there's power interrupt, after power resume, erase operation will be resume right away as well.

■ Block Diagram

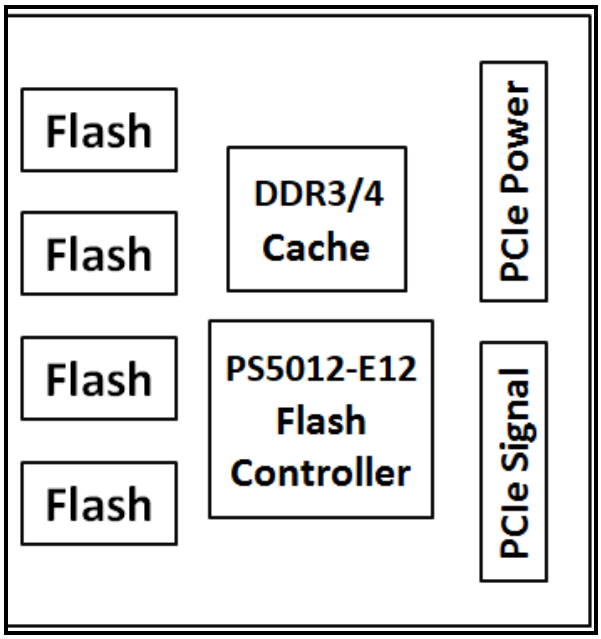

■ LBA value

Density (GB)	LBA
480	937,703,088
960	1,875,385,008
1920	3,750,748,848
3840	7,501,476,528

5. Pin Assignment and Description

Pin No.	PCIe Pin	Description
1	GND	Ground
2	3.3V	3.3V source
3	GND	Ground
4	3.3V	3.3V source
5	PETn3	PCIe TX Differential signal defined by the PCIe 3.0 specification
6	N/C	No connect
7	PETp3	PCIe TX Differential signal defined by the PCIe 3.0 specification
8	N/C	No connect
9	GND	Ground
10	LED1#(O)	Status indicators via LED devices
11	PERn3	PCIe RX Differential signal defined by the PCIe 3.0 specification
12	3.3V	3.3V source
13	PERp3	PCIe RX Differential signals defined by the PCIe 3.0 specification.
14	3.3V	3.3V source
15	GND	Ground
16	3.3V	3.3V source
17	PETn2	PCIe TX Differential signal defined by the PCIe 3.0 specification
18	3.3V	3.3V source
19	PETp2	PCIe TX Differential signal defined by the PCIe 3.0 specification
20	N/C	No connect
21	GND	Ground
22	N/C	No connect
23	PERn2	PCIe RX Differential signal defined by the PCIe 3.0 specification
24	N/C	No connect
25	PERp2	PCIe RX Differential signal defined by the PCIe 3.0 specification
26	N/C	No connect
27	GND	Ground
28	N/C	No connect
29	PETn1	PCIe TX Differential signal defined by the PCIe 3.0 specification
30	N/C	No connect
31	PETp1	PCIe TX Differential signal defined by the PCIe 3.0 specification
32	N/C	No connect
33	GND	Ground
34	N/C	No connect
35	PERn1	PCIe RX Differential signal defined by the PCIe 3.0 specification
36	N/C	No connect
37	PERp1	PCIe RX Differential signal defined by the PCIe 3.0 specification
38	N/C	No connect
39	GND	Ground
40	SMB_CLK (I/O)(0/1.8V)	SMBus Clock; Open Drain with pull-up on platform (Reserve)
41	PETn0	PCIe TX Differential signal defined by the PCIe 3.0 specification
42	SMB_DATA (I/O)(0/1.8V)	SMBus Data; Open Drain with pull-up on platform (Reserve)
43	PETp0	PCIe TX Differential signal defined by the PCIe 3.0 specification
44	N/C	No connect
45	GND	Ground
46	N/C	No connect
47	PERn0	PCIe RX Differential signal defined by the PCIe 3.0 specification
48	N/C	No connect
49	PERp0	PCIe RX Differential signal defined by the PCIe 3.0 specification
50	PERST#(I)(0/3.3V)	PE-Reset is a functional reset to the card as defined by the PCIe Mini CEM specification.
51	GND	Ground

52	CLKREQ#(I/O)(0/3.3V)	Clock Request is a reference clock request signal as defined by the PCIe Mini CEM specification; Also used by L1 PM Substates.
53	REFCLKn	PCIe Reference Clock signals (100 MHz) defined by the PCIe 3.0 specification.
54	PEWAKE#(I/O)(0/3.3V)	PCIe PME Wake. Open Drain with pull up on platform; Active Low.
55	REFCLKp	PCIe Reference Clock signals (100 MHz) defined by the PCIe 3.0 specification.
56	Reserved for MFG DATA	Manufacturing Data line. Used for SSD manufacturing only. Not used in normal operation. Pins should be left N/C in platform Socket.
57	GND	Ground
58	Reserved for MFG CLOCK	Manufacturing Clock line. Used for SSD manufacturing only. Not used in normal operation. Pins should be left N/C in platform Socket.
59	Module Key	Module Key
60	Module Key	
61	Module Key	
62	Module Key	
63	Module Key	
64	Module Key	
65	Module Key	
66	Module Key	
67	N/C	No connect
68	N/C	No connect
69	PEDET (NC-PCIe)	Host I/F Indication; No Connect for PCIe.
70	3.3V	3.3V source
71	GND	Ground
72	3.3V	3.3V source
73	GND	Ground
74	3.3V	3.3V source
75	GND	Ground

6. NVMe Command List

■ Admin commands

Opcode	Command Description
00h	Delete I/O Submission Queue
01h	Create I/O Submission Queue
02h	Get Log Page
04h	Delete I/O Completion Queue
05h	Create I/O Completion Queue
06h	Identify
08h	Abort
09h	Set Features
0Ah	Get Features
0Ch	Asynchronous Event Request
10h	Firmware Activate
11h	Firmware Image Download
I/O Command Set Specific	
80h	Format NVM
81h	Security Send
82h	Security Receive
83h-BFh	I/O Command Set specific
Vendor Specific	
C0h-FFh	Vendor specific

■ NVM commands

Opcode	Command Description
00h	Flush
01h	Write
02h	Read
04h	Write Uncorrectable
05h	Compare
08h	Write Zeroes
09h	Dataset Management
0Dh	Reservation Register
0Eh	Reservation Report
11h	Reservation Acquire
15h	Reservation Release
Vendor Specific	
80h – FFh	Vendor specific

7. Identify Device Data

The Identity Device Data enables Host to receive parameter information from the device. The parameter words in the buffer have the arrangement and meanings defined in below table. All reserve bits or words are zero

■ Identify Controller Data Structure

Bytes	Description
Controller Capabilities and Features	
01:00	PCI Vendor ID (VID)
03:02	PCI Subsystem Vendor ID (SSVID)
23:04	Serial Number (SN)
63:24	Model Number (MN)
71:64	Firmware Revision (FR)
72	Recommended Arbitration Burst (RAB)
75:73	IEEE OUI Identifier (IEEE)
76	Controller Multi-Path I/O and Namespace Sharing Capabilities (CMIC)
77	Maximum Data Transfer Size (MDTS)
255:80	Reserved
Admin Command Set Attributes & Optional Controller Capabilities	
257:256	Optional Admin Command Support (OACS)
258	Abort Command Limit (ACL)
259	Asynchronous Event Request Limit (AERL)
260	Firmware Updates (FRMW)
261	Log Page Attributes (LPA)
262	Error Log Page Entries (ELPE)
263	Number of Power States Support (NPSS)
264	Admin Vendor Specific Command Configuration (AVSCC)
265	Autonomous Power State Transition Attributes (APSTA)
511:266	Reserved
NVM Command Set Attributes	
512	Submission Queue Entry Size (SQES)
513	Completion Queue Entry Size (CQES)
515:514	Reserved
519:516	Number of Namespaces (NN)
521:520	Optional NVM Command Support (ONCS)
523:522	Fused Operation Support (FUSES)
524	Format NVM Attributes (FNA)
525	Volatile Write Cache (VWC)
527:526	Atomic Write Unit Normal (AWUN)
529:528	Atomic Write Unit Power Fail (AWUPF)
530	NVM Vendor Specific Command Configuration (NVSCC)
531	Reserved
533:532	Atomic Compare & Write Unit (ACWU)
535:534	Reserved
539:536	SGL Support (SGLS)
703:540	Reserved

■ Identify Namespace Data Structure & NVM Command Set Specific

Bytes	Description
7:0	Namespace Size (NSZE)
15:8	Namespace Capacity (NCAP)
23:16	Namespace Utilization (NUSE)
24	Namespace Features (NSFEAT)
25	Number of LBA Formats (NLBAF)
26	Formatted LBA Size (FLBAS)
27	Metadata Capabilities (MC)
28	End-to-end Data Protection Capabilities (DPC)
29	End-to-end Data Protection Type Settings (DPS)
30	Namespace Multi-path I/O and Namespace Sharing Capabilities (NMIC)
31	Reservation Capabilities (RESCAP)
119:32	Reserved
127:120	IEEE Extended Unique Identifier (EUI64)
131:128	LBA Format 0 Support (LBAF0)
135:132	LBA Format 1 Support (LBAF1)
139:136	LBA Format 2 Support (LBAF2)
143:140	LBA Format 3 Support (LBAF3)
147:144	LBA Format 4 Support (LBAF4)
151:148	LBA Format 5 Support (LBAF5)
155:152	LBA Format 6 Support (LBAF6)
159:156	LBA Format 7 Support (LBAF7)
163:160	LBA Format 8 Support (LBAF8)
167:164	LBA Format 9 Support (LBAF9)
171:168	LBA Format 10 Support (LBAF10)
175:172	LBA Format 11 Support (LBAF11)
179:176	LBA Format 12 Support (LBAF12)
183:180	LBA Format 13 Support (LBAF13)
187:184	LBA Format 14 Support (LBAF14)
191:188	LBA Format 15 Support (LBAF15)
383:192	Reserved
4095:384	Vendor Specific (VS)

■ List of Device Identification for Each Capacity

Capacity (GB)	Byte[7:0]: Namespace Size (NSZE)
480	37E436B0h
960	6FC81AB0h
1920	DF8FE2B0h
3840	TBD

8. SMART Atrributes

ID	ATTRIBUTE_NAME	Byte index	
01h	Critical Warning	[0]	-
02h	Composite Temperature	[2:1]	°K
03h	Available Spare	[3]	%
04h	Available Spare Threshold	[4]	%
05h	Percentage Used	[5]	%
06h	Data Units Read	[47:32]	1000 Sectors
07h	Data Units Written(Host Write)	[63:48]	1000 Sectors
08h	Host Read Commands	[79:64]	count
09h	Host Write Commands	[95:80]	count
0Ah	Controller Busy Time	[111:96]	mins
0Bh	Power Cycles	[127:112]	count
0Ch	Power On Hours	[143:128]	hours
0Dh	Unsafe Shutdowns	[159:144]	count
0Eh	Media Errors	[175:160]	times
0Fh	Number of Error Information Log Entries	[191:176]	count
1Ah	Warning Composite Temperature Time	[195:192]	mins
1Bh	Critical Composite Temperature Time	[199:196]	mins
1Ch	Flash Read Sector	[7:0]	sector
1Dh	Flash Write Sector	[15:8]	sector
1Eh	UNC Error	[23:16]	count
1Fh	PHY Error	[27:24]	count
20h	Early Bad Block	[31:28]	count
21h	Later Bad Block	[35:32]	count
22h	Max Erase Count	[39:36]	count
23h	Average Erase Count	[43:40]	count
24h	Current Percent Spares	[51:44]	%
25h	Current Temperature	[53:52]	°K
26h	Lowest Temperature	[55:54]	°K
27h	Highest Temperature	[57:56]	°K
28h	Reserved	[59:58]	-
29h	Current Controller Temperature	[61:60]	°K
2Ah	Spare Blocks	[63:62]	count

9. System Power Consumption

■ Supply Voltage

Parameter	Rating
Operating Voltage	3.3V

■ Power Consumption

(Unit: mW)		Read	Write	Idle
3D TLC (BiCS5)	480 GB	4,800	4,300	1,600
	960 GB	5,100	4,500	1,600
	1920 GB	5,300	5,500	1,600
	3840 GB	TBD	TBD	TBD

10. Physical Dimension

M.2 2280 PCIe SSD (Unit: mm)

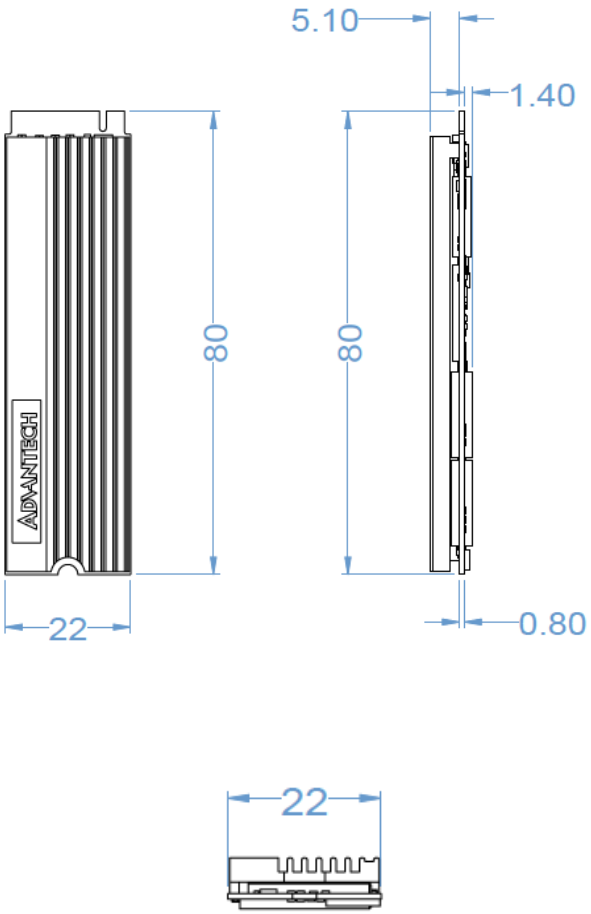

Appendix: Part Number Table

Product	Advantech PN
SQF 920-D NVMe M.2 2280 SSD (OPAL) 480G 3D TLC (BiCS5) (0~70°C)	SQF-CM8V4-480GDECC
SQF 920-D NVMe M.2 2280 SSD (OPAL) 960G 3D TLC (BiCS5) (0~70°C)	SQF-CM8V4-960GDECC
SQF 920-D NVMe M.2 2280 SSD (OPAL)1920G 3D TLC (BiCS5) (0~70°C)	SQF-CM8V4-1K9GDECC
SQF 920-D NVMe M.2 2280 SSD (OPAL) 3840G 3D TLC (BiCS5) (0~70°C)	SQF-CM8V4-3K8GDECC
SQF 920-D NVMe M.2 2280 SSD (OPAL) 480G 3D TLC (BiCS5) (-40~85°C)	SQF-CM8V4-480GDECE
SQF 920-D NVMe M.2 2280 SSD (OPAL) 960G 3D TLC (BiCS5) (-40~85°C)	SQF-CM8V4-960GDECE
SQF 920-D NVMe M.2 2280 SSD (OPAL)1920G 3D TLC (BiCS5) (-40~85°C)	SQF-CM8V4-1K9GDECE
SQF 920-D NVMe M.2 2280 SSD (OPAL) 3840G 3D TLC (BiCS5) (-40~85°C)	SQF-CM8V4-3K8GDECE